70-01

# HIGHWAY RESEARCH REPORT

# MINI-COMPUTERS AND TRAFFIC CONTROL

## INTERIM REPORT


STATE OF CALIFORNIA

BUSINESS AND TRANSPORTATION AGENCY

DEPARTMENT OF PUBLIC WORKS

DIVISION OF HIGHWAYS

MATERIALS AND RESEARCH DEPARTMENT



RESEARCH REPORT

NO. M & R 636393

Prepared in Cooperation with the U.S. Department of Transportation, Bureau of Public Roads May 1970


ClibPDF - www.fastio.com

ClibPDF - www.fastio.com

STATE OF CALIFORNIA—TRANSPORTATION AGENCY

RONALD REAGAN, Governor

DEPARTMENT OF PUBLIC WORKS
DIVISION OF HIGHWAYS
MATERIALS AND RESEARCH DEPARTMENT
5900 FOLSOM BLVD., SACRAMENTO 95819

May 1970
Interim Report
M&R No. 636393
C-1-9

Mr. J. A. Legarra
State Highway Engineer

Dear Sir:

Submitted herewith is a research report titled:

MINI-COMPUTERS

AND

TRAFFIC CONTROL

Leslie G. Kubel
Principal Investigator

Report Prepared By

L. G. Kubel and R. L. Donner

Assisted By

L. Alsop, L. Welsh and L. Peters

Very truly yours,

JOHN L. BEATON
Materials and Research Engineer

ClibPDF - www.fastio.com

ClibPDF - www.fastio.com

REFERENCE:

Kubel, Leslie G., and Donner, Robert L., "Mini-Computers and Traffic Control", State of California, Department of Public Works, Division of Highways, Materials and Research Department, April 1970. Research Project No. 636393.

ABSTRACT:

The feasibility of the application of computers to individual traffic control was studied in this project. Various traffic controller configurations were simulated by computer program with a small mini-computer. The versatility of the variable logic hardware of the computer was demonstrated in the Laboratory. A successful field installation was made of a mini-computer to replace a standard controller configuration. The advantages of the use of a variable logic computer as a traffic controller includes the ease of modification of traffic control logic and the elimination of "fixed" hardware logic constraints imposed by currently used conventional controllers.

It was concluded that the application of mini-computers to traffic control is feasible and very desirable. Cost analysis indicates that a computer controller would be comparable in cost to the current, much less versatile, fixed logic controller systems in many installations.

KEY WORDS:

Computers, Computer Applications, Computer Programs, Traffic Control, Logic

ClibPDF - www.fastio.com

ClibPDF - www.fastio.com

ACKNOWLEDGEMENT

We wish to express our appreciation to the City of Sacramento Traffic Department for their cooperation in the field applications of this project and to the Headquarter's Traffic Department of the California Division of Highways for their traffic engineering assistance.

Particular appreciation is expressed to Leonard Alsop of the Materials and Research Department for his dedicated assistance on this project.

This project was done in cooperation with the U. S. Department of Transportation, Federal Highway Administration, Bureau of Public Roads, Item No. C-1-9.

The opinions, findings, and conclusions expressed in this report are those of the authors and are not necessarily those of the Bureau of Public Roads.

ClibPDF - www.fastio.com

ClibPDF - www.fastio.com

TABLE OF CONTENTS


| | |
|---|---|
| Introduction | 1 |
| Conclusions and Recommendations | 3 |
| Implementation | 4 |
| Procedures | 5 |
| Discussion | 8 |
| Figures | |
| Appendix I | |


ClibPDF - www.fastio.com

ClibPDF - www.fastio.com

# INTRODUCTION

Traffic engineers are continually challenged to provide traffic control which will reduce hazard and delay to the travelling public. This challenge is ever increasing through the increased concentration, volume and speed of motor vehicles. This challenge of controlling traffic has been met in past years through the use of simple electro-mechanical fixed time controllers to sophisticated volume sensing, digital electronic devices.

To some degree, all of these control devices have the common operational restriction of their original traffic control concept. Therefore, most changes in traffic control strategy require new hardware. The traffic engineer, in designing a traffic controlled intersection, chooses the traffic control devices from those available which will best suit the traffic patterns of the intersection under consideration. Although traffic signal control manufacturers have supplied a wide variety of control equipment, each intersection seems to have unique traffic patterns which require additional modifications to the controllers to do the job. After the main controller is chosen, the fabricator designing and constructing the controller system is required to add additional logic circuits and special function units to the controller package in order to meet the traffic engineer's design. This procedure requires that the electrical equipment going into the control package be specially designed for each specific intersection. A significant part of the cost of the present control equipment is due to the uniqueness of the design. The traffic engineer, in designing an intersection control, is limited in his choice of intersection operation by the limits of the equipment available and optional modifications.

The Materials and Research Department has been investigating the feasibility of eliminating the built-in restrictions in traffic signal controllers. The concept for this project was inspired by the introduction of the so-called Mini-Computer to the industrial control field. A Mini-Computer is usually considered a small digital computer in the price range of $3,000 to $25,000 and usually containing from 4K to 16K of memory. Most recently, through the application of integrated circuitry and other solid state techniques, the price and reliability of Mini-Computers have improved considerably. There are currently a number of computers on the market selling for $5,000 to $10,000 that are capable of operating any major traffic intersection.

The use of digital computers for traffic control is not new. Past and present application is primarily restricted to indirectly controlling large blocks (100 or more) of intersections with one large digital computer. The computer does



ClibPDF - www.fastio.com

not control the intersection directly, but controls controllers which operate the traffic lights. These controllers are generally capable of varying offset, split and cycle times.

This study involves the use of Mini-Computers to directly control single or small groups (5 or less) of intersections. The Mini-Computer contains a generalized set of logic circuitry and a memory whereas present day traffic signal controllers contain a specialized and fixed set of logic circuitry. A Mini-Computer, therefore, can be programmed readily to perform a multitude of varied tasks whereas a typical traffic signal controller can only perform those functions for which specific logic circuitry is designed and built into the machine. This study encompasses the functional, operational and economic feasibility of the use of Mini-Computers as traffic signal controllers.



ClibPDF - www.fastio.com

## CONCLUSIONS AND RECOMMENDATIONS

The use of a Mini-Computer for traffic control, both in research and for normal intersection operation, is highly desirable. The great advantage of the application of the Mini-Computer to traffic control is the elimination of unique hardware design for each intersection. The traffic engineer would be able to design the intersection control strategy into a computer program which would optimize all the traffic control situations. In the event that the original design is not sufficient for the operation of the intersection, a new design can be applied with a minimum of effort and usually without any change in hardware. Further, if the traffic pattern changes creating new requirements on the traffic controller, a new software package can readily be designed and loaded into the digital computer. This is a distinct advantage over the present hardware constraints which require a compromise in optimizing the operation of traffic controlled intersections. A traffic engineer can think in terms of how traffic should be controlled rather than how traffic can be controlled with current equipment.

Currently, the cost of a computer applied to traffic control is comparable to many fixed logic controllers. The present fixed logic controllers have been increasing in complexity and cost while it is anticipated that the general purpose programmable computer will steadily decrease in cost in future years particularly with greater usage. The application of computer control for traffic research and normal traffic control will, of course, require some training and re-education of our traffic engineering and maintenence personnel.

It is recommended that trial installations of computer controllers be installed throughout the State in order to prove the field application of this type of equipment. It is further recommended that traffic and maintenance personnel be provided training in the areas of logic design of traffic control and maintenance of digital logic equipment.



ClibPDF - www.fastio.com

## IMPLEMENTATION

Implementation of the results of this phase of the research project has been initiated by the Headquarters and District Traffic Departments in the design and specification of traffic signal installations.

Currently Headquarters Traffic Department is planning a research project using a computer to control traffic and study vehicle gap sensing. District 03 Traffic Department is designing an installation including a computer on a modification of an existing intersection. Purchase specifications for this installation were developed under this research project.

Other implementation efforts included demonstrations and seminars on the application of Mini-Computers to traffic control which were presented to both highway engineers and representatives of the traffic control industry.



ClibPDF - www.fastio.com

## PROCEDURES

### SIMULATION

In order to examine the possibilities of using a general purpose computer as a traffic signal controller, several standard controller types were programmed to be simulated by the computer. A Type I controller, which is a 2-phase full traffic actuated controller, and a Type II, 3-phase full traffic actuated controller were programmed for the computer. Both of these controllers were operated with and without pedestrian phases. Also, an 8-phase loop occupancy controller was simulated. These computer simulated traffic controllers were demonstrated in the laboratory to traffic engineers of the Division of Highways. Traffic actuations were simulated with switch closures to the input of the computer while the traffic light outputs were displayed on a light panel connected to the computer output. It was determined at this time that a general purpose digital computer could be programmed to effectively operate as a traffic signal controller. Cost and reliability comparisons with present traffic control equipment were made. It was determined that the computerized controller would be cost competitive with many new controlled installations in the State. It was further concluded that reliability of Mini-Computers should be better than that of the more sophisticated controllers presently being used.

### DEMONSTRATION

It was decided, after successful computer simulation of standard controller types, that the next step would be to program a computer to operate an actual operational intersection. The intersection chosen for this field test was at 65th Street and Folsom Boulevard in the City of Sacramento. This intersection was chosen because of its proximity to the Materials and Research Laboratory and because of its relative complexity. This intersection is controlled by a 3-phase full traffic actuated controller, capable of automatically increasing and decreasing the various time intervals due to variations in volume of moving and of waiting traffic and 3 minor movement controllers. It was decided to simulate the current controller installation without modification. This would demonstrate the capability of the computer to perform typical traffic control functions now performed by hardwired traffic control equipment in a field environment. The hardware at this intersection consisted of an Automatic Signal 1033 controller with three MM3 minor movement controllers. All of the vehicle detectors at these intersections were pressure pads with the exception of two sonic detectors in the Folsom Boulevard left turn lanes. The installation also included external logic to control a right turn signal and for detector disconnects.

It was necessary to construct special interface equipment for the existing detector inputs and light output circuits. A general block diagram of the system is shown in



ClibPDF - www.fastio.com

DEMONSTRATION (Continued)

Figure 1. A phasing diagram of the intersection was obtained and a flow chart constructed which show the logical steps of the controller operation. These are shown in Figures 2 and 3, respectively.

INTERFACE DESIGN

The field installation of the computer at 65th Street and Folsom Boulevard necessitated that some interface circuits be designed to make the computer compatible with the existing installation. The interface circuits involved signal conditioning of the detector inputs to the computer and provision for output driving circuits from the computer to the light relays. A circuit was also designed to monitor the 120 volt light circuits to provide the necessary information to the computer to monitor for conflicting phases. These circuits were required because of the constraints of the existing installation. It is anticipated that a very minimum amount of interfacing equipment would be required to use the computer on a new installation. Vehicle detectors can be supplied which are directly compatible with the computer and some solid state load switches are capable of being driven directly from the computer output. Fail safe circuits are also commercially available which can be used to monitor for conflicting phases.

LABORATORY TESTING

After the interfacing circuits were designed and constructed, a test installation was installed in the Materials and Research Laboratory. This test installation consisted of detector switches simulating the street detectors as inputs to the computer and a light panel representing the intersection signal lights as the output of the controller. A computer program simulating the operation of the controller was written, assembled in the computer, and "debugged" through its operation on the test installation. Minor changes were made in the computer program to make it compatible with the existing fixed logic controller at the intersection and the final operational package was further analyzed by engineers from Headquarter's Traffic Department.

FIELD TESTING

Initially, some minor problems with the interface equipment were encountered and corrected. The computer control package was successfully operated at the intersection of 65th Street and Folsom Boulevard on February 16, 1970. The installation of the computer controller at the intersection takes approximately 10 minutes and each field test was conducted for approximately 1 hour. The computer controller has been installed at the intersection and operated five times to demonstrate and test its capabilities to control traffic. The operation of the computer traffic controller has been



ClibPDF - www.fastio.com

FIELD TESTING (Continued)

demonstrated to State Traffic Engineers, the City and County of Sacramento, and various traffic controller manufacturers.

TEST RESULTS

The results of these field tests demonstrated that a miniature computer can control traffic on an actual street intersection. Changes in timing and minor changes in logic were made in the field which demonstrated the ease of operation and modifications of the control program. The computer operated the intersection as it was instructed by the program with no apparent changes in traffic delays compared with the operation using the original fixed logic controller. The purpose of this field demonstration was to prove the ability of the computer controller to operate under an actual field condition when presented with normal traffic patterns. It is felt that these tests satisfactorily demonstrated this ability.



ClibPDF - www.fastio.com

## DISCUSSION

The particular computer used in this project was a Hewlett Packard 2114A equipped with a four thousand word memory. Each word contained 16 bits. This memory size proved quite adequate. The most sophisticated controller programs considered used about one thousand words of memory, and over a third of these were used for various control functions of the computer and would not be increased for more sophisticated controllers. The 2114A used was not equipped to handle automatic restart in case of power failure. This could be handled by a standard option available on most small computers.

The general purpose computer contains a generalized set of logic circuitry and a memory. The logic circuitry is capable of performing logical operations, arithmetic operations, comparisons, and input or output operations. The memory contains a list of instructions telling the logic circuitry what to do. In addition, the memory may also remember conditions or constants as required by the program. The general purpose computer can accept timing pulses and actuations from detectors and based on these inputs, it can actuate traffic lights.

Present day traffic control equipment contains a specialized set of logic circuitry designed to perform a specific task. This equipment remembers timing constants by virtue of adjustable front panel controls. To alter the inherent operational mode of this equipment generally means complete redesign of the logic circuitry. The computer, using generalized logic circuitry, can be reprogrammed readily to react in almost any operational mode desired.

A better understanding of the advantages of a computer can be obtained by looking at intersection control from a broader sense. From a mathematical point of view, a controller is a time dependent multiport network; or if you prefer, a black box. The black box has a set of inputs from the detectors and a set of outputs to the traffic lights. Based on the condition of its inputs, the state of the box, and time, the box sets the outputs. The box makes its decisions by a detailed examination of the current conditions. If the box is in the proper state and if the proper detectors are actuated, and if the time is right, the outputs will change. In controlling a single intersection in a given manner, it makes little difference if the black box is a digital computer or a hardwired controller. Both are capable of making all of the necessary decisions. The advantages of the computer lie in the ease with which it can be re-educated to respond to a different criteria.

The black box must know the algorithm used to make the decision. In the case of the hardwired controller, the algorithm is left to the manufacturer. He decides what conditions will allow a change of state, and these conditions



ClibPDF - www.fastio.com

are built into the controller. If a change in operation is desired, the controller must be returned, redesigned, and rebuilt. Each change is a matter of adding circuits and rewiring the unit. These changes are expensive and time consuming. In the computer, however, the algorithm is its program. It is stored in its memory and it may be changed by reloading the memory. The reloading is accomplished by reading a punched tape with a teleprinter. This can be accomplished in a matter of minutes, and the entire operation of the black box can be changed. The same general purpose computer can be a pre-timed two phase controller or a traffic actuated eight phase controller with pedestrian phases. Most low cost general purpose computers available today are capable of several hundred thousand basic operations in a second. Processes far more complicated than those found in current traffic controllers are possible and, therefore, the general purpose computer could be used to try new ideas in traffic control without undergoing expensive hardware changes.

Programming the computer really involves little more than the first step in the construction of a hardwired controller. This step, in either case, is making a detailed step by step analysis of what the controller has to do. Such an analysis can readily be translated into a computer program and fed into the computer. In hardwired controllers, this is only the first step in a long process to produce a final controller.

Specifications and testing of computer systems would be easier since the hardware for all systems would be virtually identical. The only differences would be in the inputs or outputs or the size of the memory. "Software" computers are easier to test than their "hardwired" cousins. Special diagnostic programs are available which use the computer to check itself. By seeing what the computer does with the program, the technician can locate troubles in a short time. Since all of the computers would be essentially the same, the technician would not have to worry about the special features required by a certain intersection. This could save a considerable amount of time.

Mini-computers hold a slight edge in reliability. The amount of electronic circuitry in the HP 2114A is approximately the same as that in an eight phase full actuated controller. This does not include the memory cores themselves, but these have been found to be virtually 100% reliable. Using a computer with an eight bit word instead of the sixteen bit word in the 2114A should eliminate about 30% of the circuitry and cause a proportional increase in the overall reliability. Additionally, the identical design of the computers should increase the reliability.

From a physical standpoint the computer and current controllers are about the same size and consume comparable amounts of power.



ClibPDF - www.fastio.com

DISCUSSION (Continued)

Looking towards the future, computer pricing should drop as a result of the use of large scale integrated circuits. Large scale integrated circuits (LSI) are becoming available now and they should be quite economical in a very few years. By its nature, however, LSI is practical only where a large number of identical circuits are needed. Hardwired controllers are relatively low production items and the varied nature of each one does not make them suitable for LSI. Computers are produced in suitable quantities to make LSI very practical.

Recently, computers using read-only memory have become available. This memory can be used to store the program. These memories are cheaper and require less associated electronic circuitry. To be useful, the computer needs a small area of scratch pad memory in which it can both read and write. Large and medium scale integrated circuits are becoming available to fill this need. This memory will forget during a power failure but anything essential could be stored in the read-only memory. With the read-only memory, teleprinters would be unnecessary. Re-programming would be accomplished by physically changing the memory. Some computers using this are available now for considerably less than $5,000. Future consideration should be given to this type of machine.

The general purpose computer has one other advantage. It could be interfaced with a recording device to record the traffic flow through the intersection. An incremental magnetic tape drive could be used, and the recording could be done simultaneously with the control. The tape recorded by the computer could then be analyzed at the organization's computer service center. Maximum and average waiting times as well as overall traffic flow could be computed. Special analysis of peak traffic periods would be possible.

There are some problems associated with the use of a general purpose computer for control of single or small groups of intersections. They are environment, price and man-machine interface.

The environmental problems may be eliminated in a few years at no added cost. The environmental problems now arise from both the memory and the integrated circuitry (IC). Recent developments in memories have made possible low cost memories that will work over wide temperature ranges. Some of the most recent entries in the small computer market use these memories. The permissible temperature range for integrated circuits has been increasing steadily for the past few years and this trend should continue. Improvements in quality control have already eliminated some of the very low range I.C.'s prevalent a few years ago. High range I.C.'s are available now at very little increase in cost and in a few years, high range I.C.'s may completely replace low range I.C.'s.



ClibPDF - www.fastio.com

DISCUSSION (Continued)

The price of small computers currently available makes them competitive with only the more complex signal control installations, at least on a first-cost basis. A computer using four thousand words of eight bit memory should be adequate. Computer cycle time can be slow. Sophisticated hardware instruction sets are not necessary. Computers of this class are currently available with a base price of under $5,000. Input and output interface must be supplied. A teleprinter and its interface would not be necessary at every installation, since it is used only in the initial programming of the computer. This could save up to $2,000 on an installation. With this reduction a computer system could cost between $7,000 and $8,000 complete with input and output interface.

Man machine interface to the computer is accomplished by means of programming. Most small computers utilize assembly language programs. Since capable experienced assembly language programmers are not plentiful, any significant utilization of this type of approach would require some programming and maintenance training.

POTENTIAL APPLICATIONS

A small general purpose digital computer could be of significant use as a research tool. The extreme flexibility of this machine would allow a traffic researcher to free his mind of the equipment restraints. Almost any algorithm (procedure) he chooses to convert inputs into outputs could be readily implemented by programming. He would no longer have to scratch for equipment which would approximate a desired control concept.

More than one control concept could readily be tried at the same intersection and the results compared. Ideally, a criteria for control effectiveness could be established and measured, recording could be made on magnetic tape and relative system effectiveness could be evaluated by computer.

A complete traffic control research system, with magnetic tape recording capability, might include the following:



ClibPDF - www.fastio.com

POTENTIAL APPLICATIONS (Continued)

| | |
|---|---|
| Computer with 4k memory | $ 5,000 |
| Automatic Restart | 500 |
| Teleprinter and Interface | 2,000 |
| Microcircuit Interfacing (for input and output of data - 16 lines per board, 2 boards needed @ $750) | 1,500 |
| Incremental Tape Drive and Interface | 6,250 |
| Additional Driver Circuitry to go between load switches, detectors and microcircuit interface boards - estimated cost | 600 |
| Total | $ 15,850 |

In addition to this equipment, a complete controlling system would require detectors, load switches, fail-safe monitoring flashers, and cabinet. The equipment should be suitable for field use but not necessary for temperature. Computers can be manufactured to meet the temperature range required but the cost for producing a small number of these for trial systems could be very high. Temperature restrictions on the computer and tape drive can be accommodated at a nominal cost by air conditioning the cabinet.

The flexibility and capability of the general purpose computer hopefully will prove it to be a practical controller for non-experimental purposes. The extreme flexibility of the computer allows it to be custom programmed to match truly unique intersections. This would make available traffic actuated control where, with conventional controller systems, this is often very difficult. Complete or partial overlap is simple, and unusual conflicting phases could be avoided. Non-conflicting phases should never have to wait when a properly programmed computer does the controlling.

Programming a computer for traffic control in special cases will remain difficult but almost any system currently covered by our Standard Specifications could be covered by a combination of standard subprograms. It is indeed quite conceivable that a large computer can be taught to program each individual case. A traffic engineer would describe the intersection in general terms to the computer and the computer would prepare the program. If desired, the program could be sent by standard teletype to the signal maintenance station in charge of the controller.



ClibPDF - www.fastio.com

POTENTIAL APPLICATIONS (Continued)

Where the economics of input-output communication between intersections permits, multiple intersections could be controlled from one computer. Each individual intersection could still be controlled independently, coordinated or both as desired.

The estimated cost to replace a hardwired controller with a minimum computer is estimated as follows:

| | |
|---|---|
| Basic Computer with K-8 Bit Memory | $ 5,000 |
| Automatic Restart | 500 |
| Input-Output Interface | 1,500 |
| Additional Driver Circuitry | 600 |
| Air Conditioning | 300 |
| Total | $ 7,900 |

Programming costs should also be included; however, they should become insignificant when prorated over numerous installations. The total estimated cost is roughly $1,000 to $2,000 higher than a full eight phase modular solid state hardwired controller. If multiple intersections in close proximity to each other were controlled by minicomputer, it is likely that the economic balance for first cost would swing to the side of the computer.

Softwired computers could prove much more economical in a few years. Aside from being more sophisticated and more capable, they can be changed easily to meet new demands. They should be compatible with whatever the future holds for traffic control. Even with the present State-of-the-Art where first cost may appear to be higher, at least for single intersections, the user benefits, both tangible and intangible, will likely much more than offset the relatively nominal first cost difference. Tangible benefits would include both time and vehicle wear-and-tear and fuel costs. Intangible benefits would include reduced frustration by eliminating waits for non-conflicting phases.



ClibPDF - www.fastio.com

ClibPDF - www.fastio.com

Figure 1

# GENERAL SYSTEM BLOCK DIAGRAM

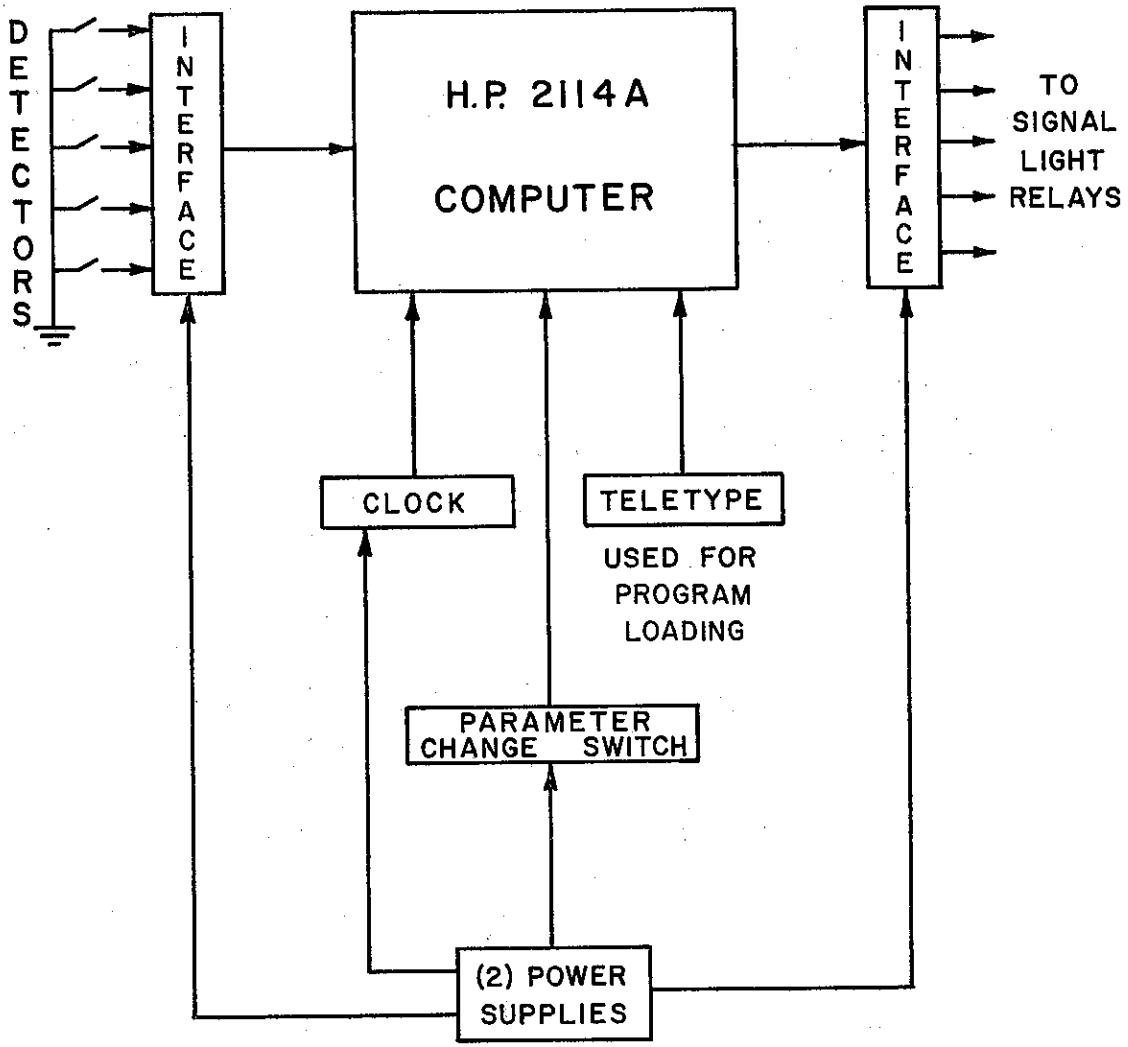


ClibPDF - www.fastio.com

Figure 2

# PHASE DIAGRAM OF 65th ST AND FOLSOM BLVD.

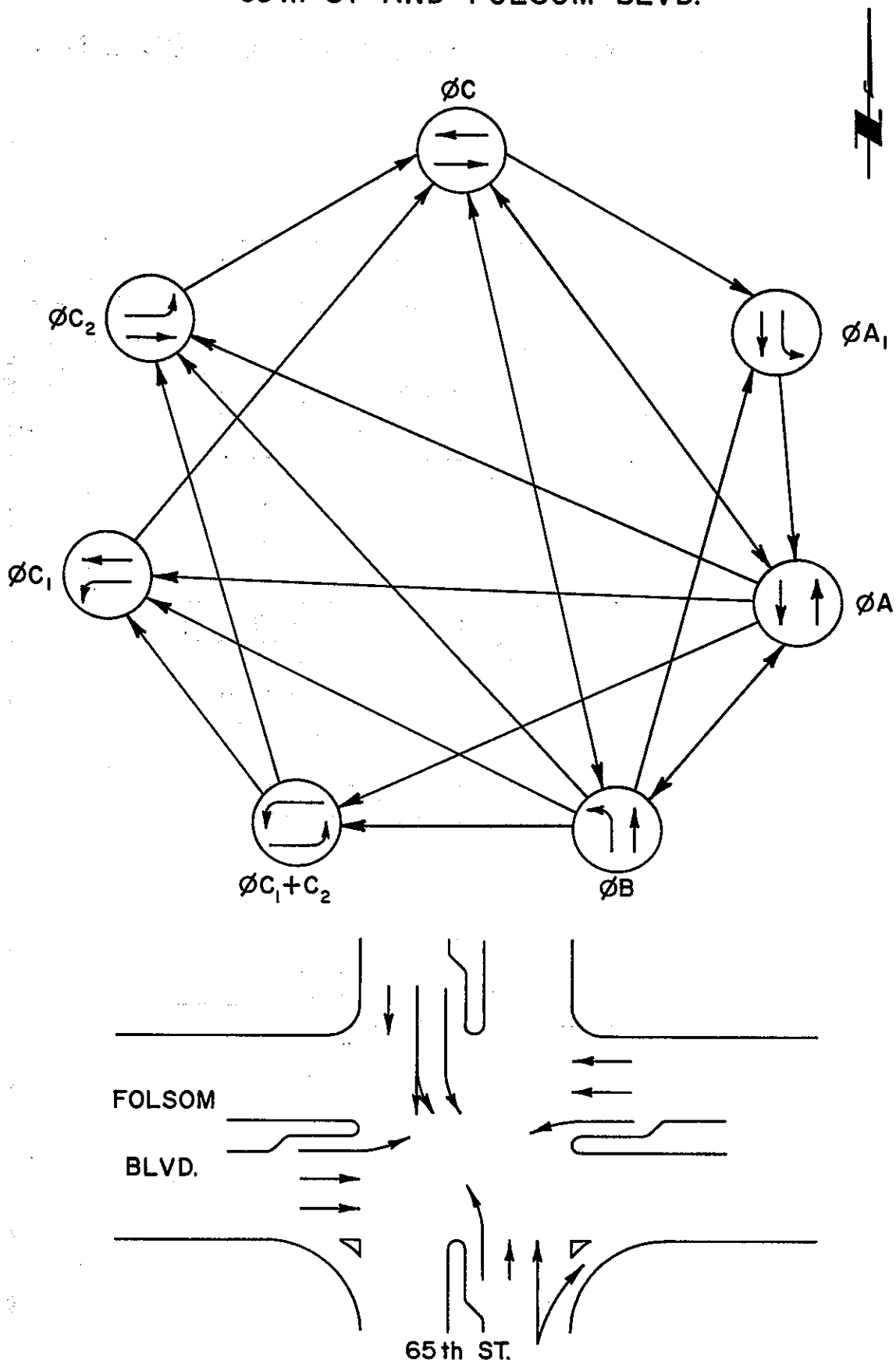


ClibPDF - www.fastio.com

Figure 3

GENERAL FLOW CHART
65th ST. AND FOLSOM BLVD.
CONTROLLER PROGRAM

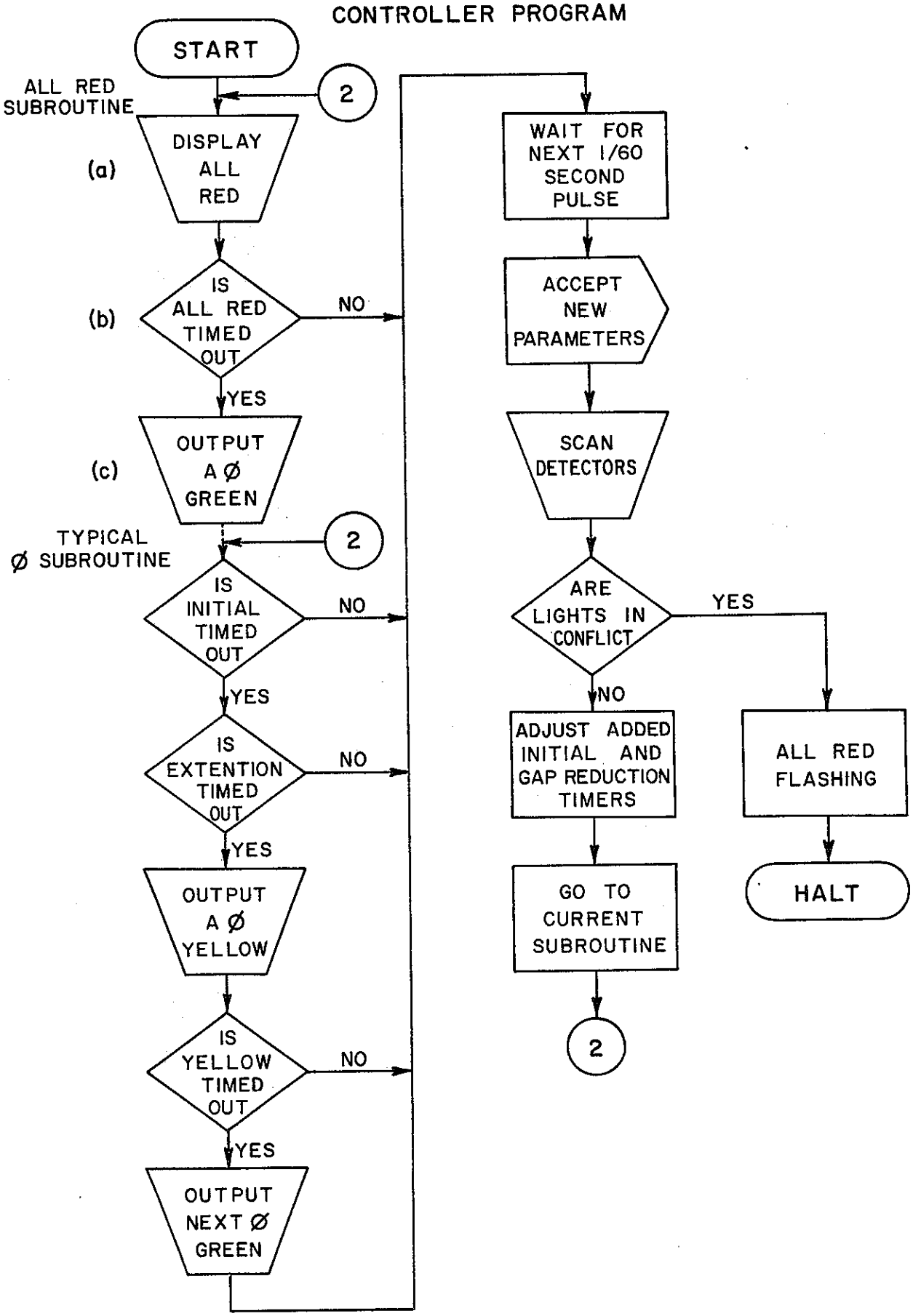


ClibPDF - www.fastio.com

Figure 4

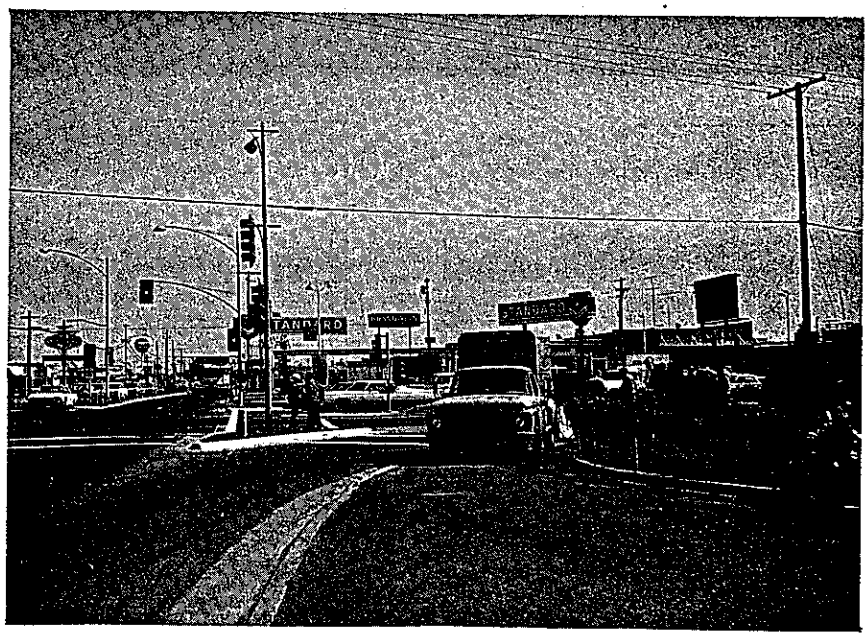


Controller van at 65th Street and Folsom Boulevard.

Figure 5

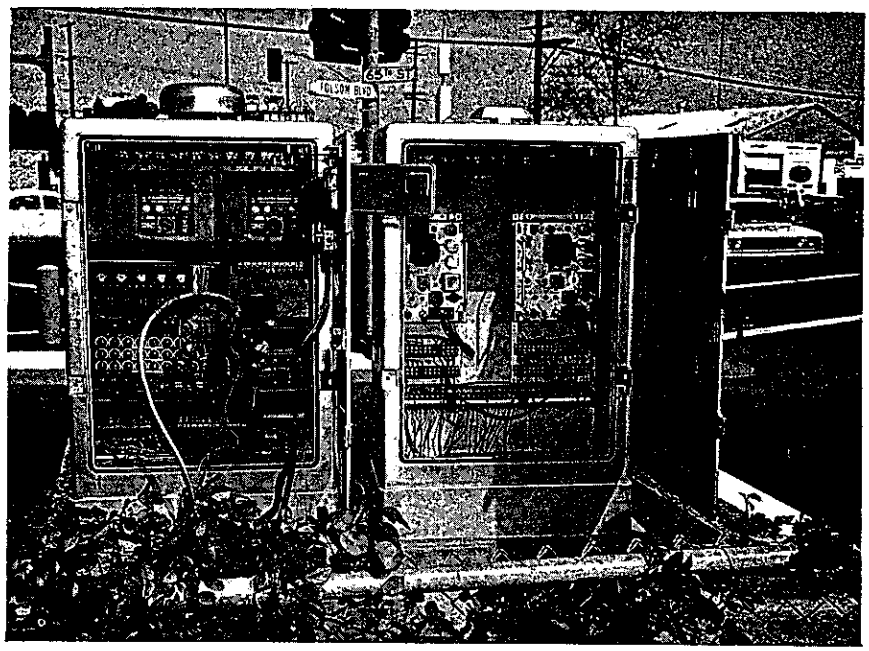


Existing control equipment at 65th Street and Folsom Boulevard. Cabinet on left replaced by computer.

ClibPDF - www.fastio.com

Figure 6

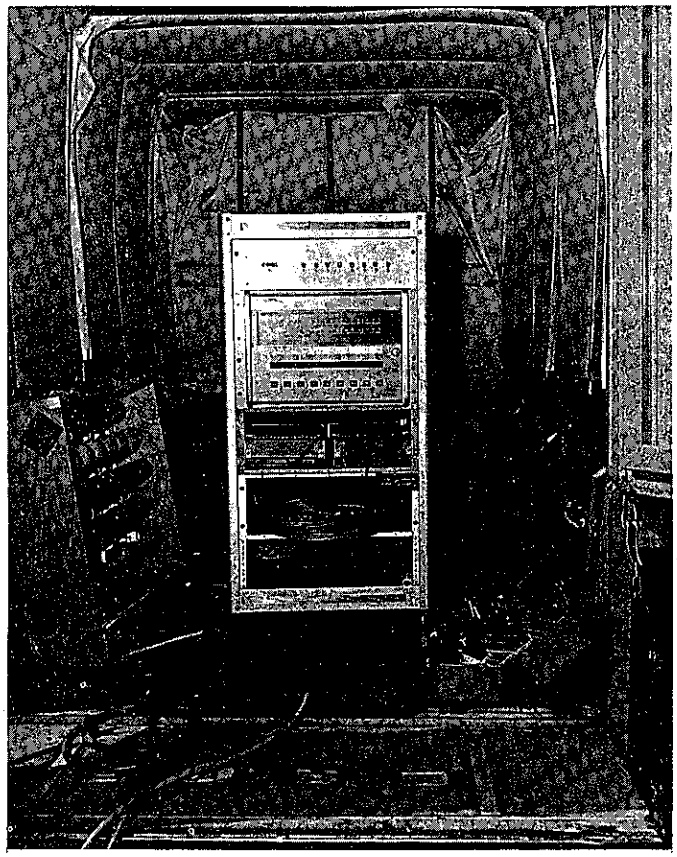

Traffic control computer and interface in van.

ClibPDF - www.fastio.com

FIGURE 7

ALL RED OUTPUT ROUTINE

| LABEL | OPERATION | OPERAND | COMMENTS |
|---|---|---|---|
| RED | DEF | BEGIN | |
| BEGIN | LDA | PHASE | LOAD IN A REGISTER RED OUTPUT |
| | JSB | OUTPØ | JUMP TO SUBROUTINE TO DISPLAY RED |
| | LDA | PHASE + 19 | LOAD SECOND PART OF RED OUTPUT |
| | JSB | OUTP1 | DISPLAY SECOND PART OF RED |
| | LDA | RED | LOAD ADDRESS OF A RED SUBROUTINE |
| | STA | SUBR | STORE AS SUBROUTINE ADDRESS |
| | ISZ | REDT | STEP ALL RED TIMER SKIP IF ZERO |
| | JMP | BACK | JUMP TO TIMING SECTION |
| | LDA | TIM | LOAD ALL RED TIME |
| | STA | REDT | STORE IN REDT |
| | JMP | NO 8 | JUMP TO AØ GREEN ROUTINE |

ClibPDF - www.fastio.com

# APPENDIX I
# PROGRAMMING

## GENERAL PROGRAMMING

The computer used in this research study was a Hewlett Packard Model 2114A digital computer. This machine has a 4K memory, of 16 bit words and a cycle time of 2 microseconds. This means that the computer has a memory which will store 4096, 16 digit binary instructions and that it can perform any one of the instructions in a minimum time of 2 microseconds. Each storage location in the memory, which is capable of storing a 16 digit binary number, is used to store instructions or constants. This computer has an instruction set of approximately 70 instructions which may be considered as hardwired logic operations in the computer which can be initiated by the computer memory instruction in any logical sequence. Each of these 70 instructions has been assigned a unique 16 bit binary number which can be stored in memory and is recognizable by the computer. Programming the computer simply consists of establishing a sequence of instructions in the computer memory which will perform the logic required. These instructions consist of logical operations such as ADD, OR, and AND.

It can be seen that writing a program with a 16 bit binary number would be a cumbersome process. Therefore, a mneumonic or three letter symbol has been assigned to represent each 16 bit binary instruction. The programmer uses these mneumonics in writing his computer program. Supplied with the computer is a special program called an assembler. This program is capable of taking the mneumonic instructions and converting them to the 16 bit binary words which can be understood by the computer.

Programming the computer begins with the construction of a flow chart or a blocked diagram of the logical operations that are to be performed by the computer. This flow chart is then interpreted into the mneumonic words which will instruct the computer to perform this operation. An example of a flow chart is shown in Figure 3.

## CONTROLLER PROGRAMMING FOR 65th STREET AND FOLSOM BOULEVARD

The development of a program for the 65th Street and Folsom Boulevard intersection began with the phasing diagram shown in Figure 2. This diagram shows the phase sequencing of the intersection used by existing controller. The computer program developed for the computer operation for the intersection duplicates this phasing. From this phasing diagram, the generalized flow chart shown in Figure 3 was developed. The program is based on a 1/60 second time base. Every 1/60 second, the computer commands the initiation of the program to make any changes or modifications necessary for the



ClibPDF - www.fastio.com

intersection operation. The computer then rests in the timer until the next 1/60 second pulse arrives. It is estimated that the computer spends 90% of its time in the timing circuit waiting for the next pulse. The program starts with the display of an all red period on the intersection. This red display is necessary for the transition between the flashing phase and the normal controller operation. Each cycle through the all red display portion of the program will decrease the all red timer by 1/60 second and check to see if the red timer is timed out. If the red timer is not timed out, the program is directed to the program timer and waits for the next 1/60 second pulse. When the red timer does time out, the program proceeds to display green in the A phase. It then continues through the A phase subroutine updating the initial and extension timers and compensating for the gap reduction and added initial circuits. As each timer is checked and found to still be timing, the program is directed back to the program timing circuit to wait for the next pulse. As the timers are timed out, the program moves on to the next timing circuit until each timing circuit has been exhausted. At that time, the computer displays yellow in the A phase and starts timing the clearance period. After the clearance period has been completed, the computer is directed to display green in the next phase requiring service. Each time a program timer initiates a start through the program, a check is made for new timing parameters and all of the traffic detections are recorded. A check is also made for conflicting light displays and if found, the computer automatically switches into an all red flashing display and halts the computer program.

If no conflict is found, adjustments are made to the added initial and gap reduction timers and the program continues to the phase having a green indication.

A sample of the program coding in assembler language is shown in Figure 7. This is the all red output routine of the program shown on the flow chart blocks a,b,c. The program starts at the label BEGIN with the operation LDA and the operand PHASE. This statement instructs the computer to load the constant found in a memory location PHASE into the A register. The A register is a working register in the computer where all logical operations take place. The next instruction jumps the program to an output routine which will display the all red indication which was loaded into the register. Next the constant PHASE + 19 is loaded into the A register since all of the red lights cannot be outputted at one time and again a jump is made to a subroutine which will display the second half of the red light output. Next the A register is loaded with an address or memory location called RED. RED has previously been defined in the program as the starting location BEGIN. This



ClibPDF - www.fastio.com

starting location is stored from the A register to a memory location called SUBR. This is necessary so that the computer will know which subroutine to come back to after it has waited for the next timing pulse. The next instruction which is ISZ tells the computer to take the red timer REDT and decrease it by 1/60 second. If REDT is not zero, the next instruction commands the computer to jump back to the program timer to wait for the next 1/60 second pulse. After the next timing pulse is initiated, the computer will come back to BEGIN and start through the all red output routine. When the red timer REDT is found to be zero, the program will jump over the next instruction and go back to the program timer and will load into the A register TIM. The next instruction then takes this value of TIM and resets the red timer to its original value, after the red timer is restored, a jump instruction is made to display A phase green.



ClibPDF - www.fastio.com

ClibPDF - www.fastio.com

ClibPDF - www.fastio.com

ClibPDF - www.fastio.com