STATE OF CALIFORNIA
DEPARTMENT OF PUBLIC WORKS
DIVISION OF HIGHWAYS

A REPORT OF

A PRELIMINARY CORROSION SURVEY

AT THE PROPOSED SANTA BARBARA MAINTENANCE STATION

March 1961

61-09

ClibPDF - www.fastio.com

State of California
Department of Public Works
Division of Highways
Materials and Research Department

March 1961

Inter-Agency Agreement
Service Agreement SA 2337
W.O. 4503-SC
Lab. Auth. Proj. 72-S-6241

Mr. Anson Boyd
State Architect
Division of Architecture
1120 N Street
Sacramento, California

Attention: Mr. O. E. Anderson, Principal Engineer

Dear Sir:

Submitted for your consideration is:

A REPORT OF

A PRELIMINARY CORROSION SURVEY

AT THE PROPOSED SANTA BARBARA MAINTENANCE STATION

Study made by . . . . . Structural Materials Section
Under general direction of . . . . . J. L. Beaton
Work supervised by . . . . . R. F. Stratfull
Report prepared by . . . R. F. Stratfull, W. S. Maxwell, and G. R. Steffens

Very truly yours,

F. N. Hveem
Materials and Research Engineer

By J. L. Beaton
Supervising Highway Engineer

RFS/WSM/GRS:mw
cc: LRGillis
FEBaxter
District V

ClibPDF - www.fastio.com

I. INTRODUCTION

On December 29, 1960, Mr. O. E. Anderson, Principal Engineer, Division of Architecture, requested by letter that the Materials and Research Department perform a soil resistivity survey at the proposed site of the Santa Barbara Maintenance Station in Santa Barbara, California.

It was requested that a corrosion survey be made for the purpose of minimizing corrosion of underground utilities to be installed at the proposed site.

The survey was performed by representatives of the Materials and Research Department during the week of January 9, 1961. The results of this survey are included in this report.

This work was performed under Interagency Agreement S.A. 2337 and Work Order 4503-SC.

ClibPDF - www.fastio.com

II. SUMMARY AND CONCLUSIONS

There are at least two distinct types of soils at the proposed construction site. One of the soils is sandy in character and is considered to be relatively non-corrosive. It is estimated that a 3/4" steel pipe would be perforated by corrosion in approximately 30 years in this sandy soil. The other predominate soil is a clay which is corrosive, as it is estimated that a 3/4" steel pipe would be perforated by corrosion in approximately 13 years.

In grading operations it is apparent that the soils will be intermixed and will most likely result in a highly corrosive environment to steel pipe.

If corrosion is to be minimized, it will be necessary to cathodically protect the underground pipe as a part of the initial construction of the facility. The wisdom of this choice is verified by the fact that there was accelerated corrosion of the water lines at the nearby National Horse Show and Flower Show Grounds at Santa Barbara during the construction period of the facility.

It also is recommended that the workmanship of the pipe coating be determined by testing the coating before the pipe has been placed underground. Also, the specifications for the contract should include the provision that the State may check the quality of the coating after the pipe has been back-filled.

ClibPDF - www.fastio.com

III. RECOMMENDATIONS

A. General

1. All underground pipe that is metallic and coated shall be cathodically protected from corrosion.

2. Such cathodic protection facilities shall be installed as a part of the contract for the initial construction of the facility.

3. All underground piping shall be coated with coal tar enamel which is covered by AWWA Specification C203 together with Section A1.2 of the Appendix of said specification or with a 20 mil film thickness of polyethylene or polyvinyl chloride tape coating.

4. All coated pipe shall be backfilled with sand with minimum cover of 3" all around.

5. Electrical insulating couplings shall be placed in the underground piping at the following locations:

   a. At all connections between State piping and those of private utilities.

   b. At all connections of copper to steel pipe.

   c. At the soil side where any metal piping enters any building.

   d. No piping placed in the same excavation shall lie across or otherwise be in mechanical or electrical contact with other pipe except at designated locations.

6. If cast iron pipe is to be used as gravity flow lines, electrically disconnect from all other piping. If cast iron pipe is to be used as pressure lines, electrically bond each joint by means of brazing or welding and cathodically protect.

7. Electrically interconnect all underground metal pipe of similar metals.

8. Where mechanically feasible, use plastic pipe.

9. Do not ground electrical system to any underground pipe; use a separate grounding system.

10. All electrical ground wires that are within underground conduit shall have a TW coating or equal.

ClibPDF - www.fastio.com

11. All underground electrical conduit is to be made of non-metallic materials.

12. All underground telephone cable shall be coated with a reinforced neoprene jacket.

13. All underground conduit shall be free-draining so as to remain free of standing water.

14. Calcium chloride or chloride containing additives shall not be used in concrete containing reinforcing steel or radiant heating systems.

15. Within 30 days of the time the contract for construction is let, the contractor shall notify in writing all major utility companies in the area of the State's intentions to cathodically protect the underground pipe.

16. All metallic pipe placed beneath concrete floor slabs shall be placed within a conduit that will facilitate the repair or replacement of the pipe without the necessity of damaging the slab.

B. Pipe Coatings

1. Prior to placing and backfilling, all coated pipe shall be tested by a high voltage spark or holiday tester. The voltage of the holiday tester shall be a minimum of 9000 volts. There shall be no holidays or pin holes in pipe coatings.

2. All coating imperfections as determined by the high voltage tester shall be repaired for a minimum distance of three inches (3") each side of the holiday. The coating material used for repair shall be identical to the coating on the pipe.

3. The contractor shall be aware that the testing of the coating of the placed pipe will be accomplished by the State within a period of one (1) year after construction, and he will be required to excavate and repair damaged coating.

ClibPDF - www.fastio.com

IV. TESTS

WATER

A sample of water that could be used at the facility was sampled. The result of the partial chemical analysis of the water is as follows:

Anions (PPM	
Chlorides (Cl)	25
Sulfates (SO_4)	180
Determinations (PPM)	
Total Hardness ($CaCO_3$)	280
Total Solids - 110° C	500
Hydrogen Ion Conc (pH)	7.5
Calculated (PPM)	
Sodium Chloride (NaCl)	41
Sodium Sulfate (Na_2SO_4)	260
Resistivity	540 ohm cm.

Because of an unavoidable circumstance, the water was not analyzed for total alkalinity which would have enabled the calculation of the Langliar Index. However, it appears that the water is sufficiently hard that it will form a calcium scale on pipe. Also, it appears that the water may tend to be corrosive. If boiler facilities are to be constructed, it is suggested that the feasibility of water treatment be considered to prevent scaling and corrosion of the boilers.

SOIL

Included in the Appendix is Exhibit IV which is an Equi-Resistivity Contour Map of the soil in its existing distribution. As will be noted on this map, there are large deviations between the field and laboratory resistivity measurements. The reason for the large discrepancies between the two values is that the soil sampled for laboratory evaluation was near the surface of the ground and is a sandy and relatively non-corrosive soil. The field resistivity measurements include and average the relatively non-corrosive top soil and the corrosive underlying clay soil.

By means of an empirical soil test, it is estimated that a 3/4" steel pipe placed in the sandy soil would be perforated by corrosion in approximately 30 years. In the underlying clay soil, portions of which will be at pipe depth as a result of grading operations, it is estimated that a 3/4" steel pipe would be perforated by corrosion in approximately 13 years.

ClibPDF - www.fastio.com

V. DISCUSSION

As will be noted on Exhibit I, Equi-Resistivity Contour Map, the measured field resistivity of the soil varied from 800 ohm-cm to 4000 ohm-cm. The average resistivity was approximately 2000 ohm-cm.

Laboratory tests were performed on soil samples obtained from various locations throughout the proposed site. The pH (hydrogen-ion concentration) and resistivity were determined from these samples.

The laboratory results showed a higher soil resistivity than those obtained in the field. The field resistivity measurements indicate that a more corrosive soil is beneath the topsoil.

The pH of the soil varied from 6.3 to 9.1. The average pH was 7.7, which is an alkaline soil.

There is a possibility that the 22" diameter Southern Counties Gas Company gas line that traverses the property may be under cathodic protection. If so, the influence of one cathodic protection system on another should be determined; therefore, the gas company should be notified of the State's intentions and cooperative tests performed in order to reach a safe level of protection without adversely affecting either installation.

The final type and size of the cathodic protection system at Santa Barbara Maintenance Station shall be determined after the installation of the underground facilities.

There are two types of cathodic protection used in corrosion control: galvanic anode cathodic protection, utilizing sacrificial magnesium anodes, and impressed current cathodic protection, using inert anodes and rectifiers. At the present time the particular type of protection that will meet the needs of the underground piping installation at the subject site cannot be predetermined with adequate accuracy. Therefore, preliminary cost estimates and specifications have been compared for both protection systems. The cost figures arrived at are based on preliminary field data and empirical assumptions, taking all eventualities, such as poor workmanship and a corrosive environment, into consideration. The cathodic protection cost estimate should be used for budget purposes only.

ClibPDF - www.fastio.com

VI. TENTATIVE SPECIFICATIONS

A. Impressed Current Protection

Rectifier:

Good-All Type N24-10 (N3) rectifier or equal. The output shall be variable from 0 to the maximum voltage in a minimum of 10 equal steps.

The rectifier shall perform satisfactorily at maximum output at an ambient temperature of 130° F. The unit shall have built-in input and output overload protection.

A D.C. ammeter with suitable range switching shall be installed. The scale ranges of such an ammeter will not exceed 140% of the rated output reading of each selenium stack.

The entire installation shall be mounted in a vandal-proof enameled steel box of code gauge thickness. The box shall have a locking cover and padlock, and it shall be suitable for wall or bench mounting.

Anodes:

The impressed current anode shall be "Durion" 2" x 60" Type D-LO high silicon cast iron anodes, or equal high silicon cast iron anodes with five feet of A.W.G. #8 oil resistant waterproof cable or equal.

Anode Backfill Materials:

The anode backfill material shall be "National" BF-3 backfill, a prepared mixture made of graphite particles and an alkalizer or equal.

Installation of Anodes:

Impressed current anodes shall be placed at the designated locations in the following manner:

1. Auger or otherwise construct an anode hole of 10" in diameter 10' below grade.

2. Fill bottom of hole with special backfill material to a compacted depth of 1', which is 9' below grade.

3. Center anode carefully in hole and add backfill material in one foot compacted layers until the backfill is approximately one foot above anode.

ClibPDF - www.fastio.com

4. After making electrical connections, backfill the remainder of the hole with sand. Top soil may be used in the top six inches.

Wiring:

Standard copper anode lead wire shall be C.P.S. OR-1 600 volt A.W.G. #2/0 or Anaconda type CP cathodic protection cable or equal.

All "in line" splices and all splices of the anode lead wires to the feeder lines shall be made with the Cadweld process or equal.

All underground wire splices shall be adequately protected from current leakage through the soil by using a Scotch-Cast Splicing Kit containing No. 4 resin or equal.

The main feeder wire from the rectifier to the anode beds and pipe shall be buried at least two and a half feet below the original ground or at a depth which will insure protection of the wire from accidental severance by cultivation or excavation.

The main feeder wire from the rectifier to the anode beds and pipe shall be encased in conduit to the depth of burial of the wire. The length of conduit shall be sufficient to protect the feeder wire from tampering or accidental severance and will traverse the distance between the rectifier and that point where the wire is buried at specification depth. Suggested Cathodic Protection Material Suppliers:

Harco Corporation
P. O. Box 7026
16901 Broadway Avenue
Cleveland 28, Ohio

Electrical Facilities, Inc.
1307 66th Street
Emeryville, California

Frost Engineers Service Co.
P. O. Box 767
Huntington Park, California

The Pipeline Protection Co.
420 Market Street
San Francisco 11, Calif.

Brance Kracky Co.
4411 Navigation Blvd.
Houston, Texas

Pipe Line Anode Corp.
Box 996
Tulsa, Oklahoma

Pipeline Coating & Eng. Co.
5501 South Santa Fe
Vernon, California

Vanode Corporation
880 East Colorado St.
Pasadena 1, California

B. Galvanic Protection

Sacrificial Anodes - Galvanic

Dow Type 32-D galvo-pak (Galvo-Mg) magnesium anodes with 15 feet length of lead wire.

ClibPDF - www.fastio.com

a. Placement of Anodes and Shunt

1. Place anode from 5' to 10' from the pipe and auger 8" diam. hole 5' 6" deep.

2. Place anode in hole and compact soil around and to the top of the anode so that the anode is firmly contacting soil on all sides.

3. Moisten anode with water until air bubbles cease to rise to the surface of the water.

4. A shunt metering box is placed near the pipe and installed level with the grade as noted on Exhibit I.

b. Excavate trenches 12" deep by 3" (min.) wide from anode to gas pipe for placement of the anode lead wire.

NOTE: The electrical connection of the magnesium anode lead wire to the pipe will automatically result in a flow of electrical current. The magnesium anode will be inside a cloth sack and surrounded by a special backfill material. (Do not open or cut the cloth sack; embed the entire unit in the anode hole.)

Miscellaneous:

Materials can be purchased from the following companies:

Anodes

Cathodic Protection Service
4601 Stanford Street
Houston 6, Texas

The Pipeline Protection Co.
420 Market Street
San Francisco 11, Calif.

Ground Clamp & Shunts

Pipeline Coating & Engineering Co., Inc.
5501 South Santa Fe Street
Vernon, California

Pull Boxes

Brooks Products, Inc.
2400 Adeline Street
Oakland, California

ClibPDF - www.fastio.com

VII. ESTIMATED COSTS

A. Impressed Current Cost Estimate

Amount	Price	Item	Cost	Hours Labor
1 each	$6.50	Scotch Cast Splicing Kits 82-A2 with #4 Resin (inline)	$6.50	1
1 each	5.50	Scotch Cast Splicing Kits 90-B1 with #4 Resin (Wye)	5.50	1
1 lb.	5.00/lb.	1# Pro-Seal EP711	5.00	1
2 each	18.00	Durion 2" x 60"	36.00	2
500 lbs.	5.25/CWT	Coke Breez 250#/Anode	26.25	3
2 each	1.00	Ground Clamp	2.00	1
1 each	170.00	Good-All Rectifier, Type N24-10 (N3)	170.00	8
15 ft.	60¢/ft.	3/4" Conduit	9.00	1
50 ft.	$48/M	#8 TW Wire	2.40	2
L. S.		Misc. Elect. Material	40.00	2
70 ft.	20¢/ft.	Trench Excavation	14.00	10
2 each		10" x 8' deep holes (Exc.)		8
5 each	5.00	Jumper wire, weld and install	25.00	7
L. S.		Misc. Excavation		4
			$ 341.65	51

Total Materials Cost	$ 341.65	
Sales Tax 4%	13.67	
Labor Cost @ $5.00/hr.	255.00	
Insurance @ 12½% of labor	31.88	
Engineering and Inspection	1000.00	
Sub-Total	1642.20	
20% Profit and Overhead	328.44	
Total Cost	$ 1970.64	Say $2,000.00

ClibPDF - www.fastio.com

B. Galvanic Anode Cost Estimate

Amount	Price	Item	Cost	Hours Labor
40 each	$21.50	Type 32-D Galvo-Pak Anode ave. wt. 80#, rating 2 amp yrs.	$860.00	80
40 each	5.60	No. 3½ State Pull Box or equal (Conc. Box w/conc. cover)	224.00	10
40 each	0.60	0.01 ohm metering shunt	24.00	10
10#	5.00	1# Pro-Seal EP711 Kit, Grey	50.00	
40 each	1.00	Ground Clamps	40.00	10
40 each		8" x 5' 6" deep holes		80
500 ft.	20¢/ft.	Trenching	100.00	20
			$ 1298.00	210

Total Materials Cost	$ 1298.00	
Sales Tax @ 4%	51.92	
Labor @ $5.00/hr.	1050.00	
Insurance @ 12½% of labor	131.25	
Engineering and Inspection	1000.00	
Sub-Total	$ 3531.17	
20% Profit and Overhead	706.23	
	$ 4237.40	Say $ 4,300.00

ClibPDF - www.fastio.com

EXHIBIT I
INSTALLATION DETAILS OF GALVANIC ANODES

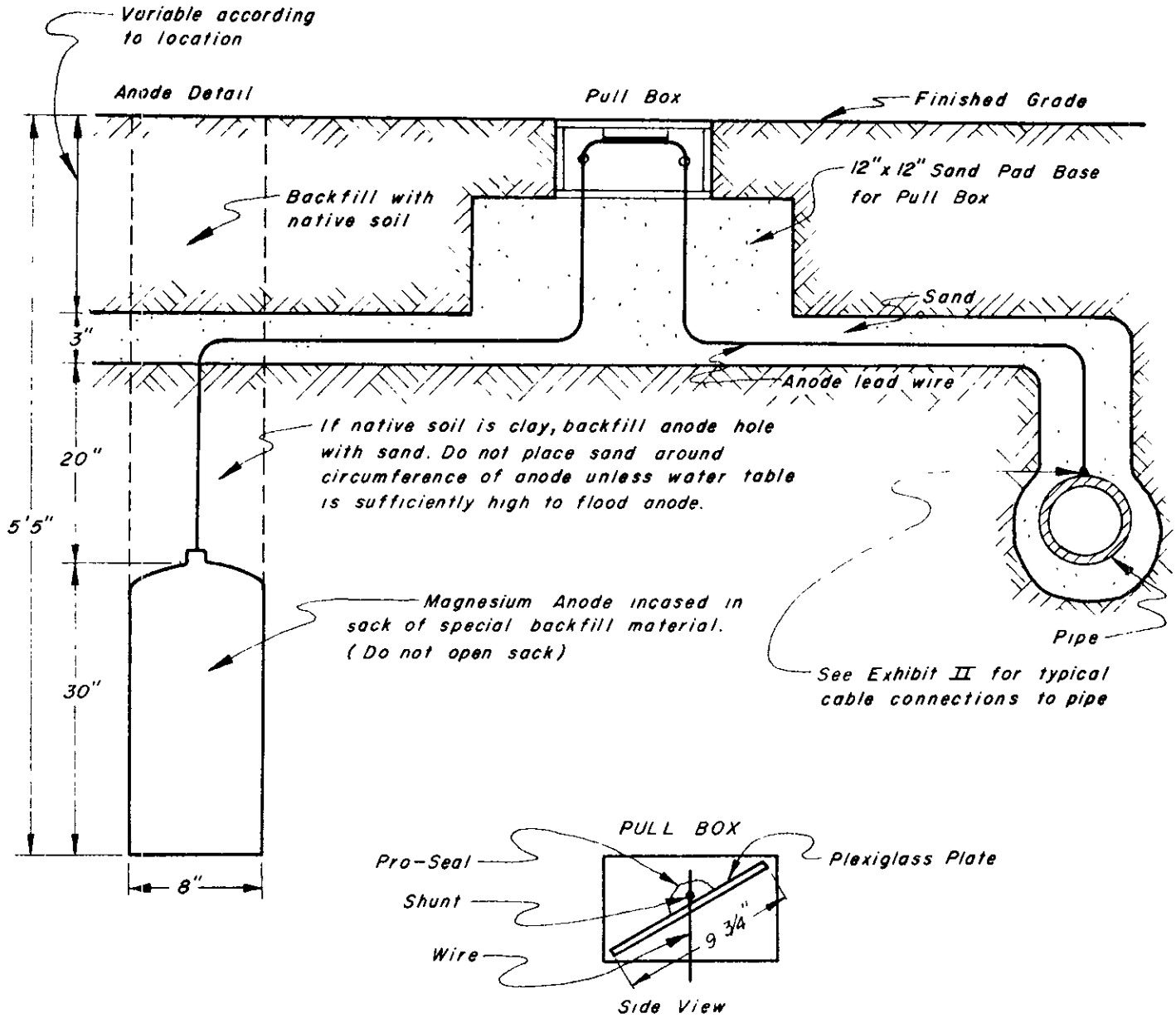

NOTE: Connect shunt to lead wire, solder and capsulate shunt and lead wire to have 1/4" min. Pro-Seal all around. Then mount the capsulated shunt on the plexiglass plate (9 3/4" x 6" x 1/4"); attach with Pro-Seal, making sure the metering leads are in a vertical position Install plexiglass plate in Pull Box as shown.

No Scale

ClibPDF - www.fastio.com

EXHIBIT II
INSTALLATION DETAILS OF IMPRESSED CURRENT ANODES

ANODE DETAIL

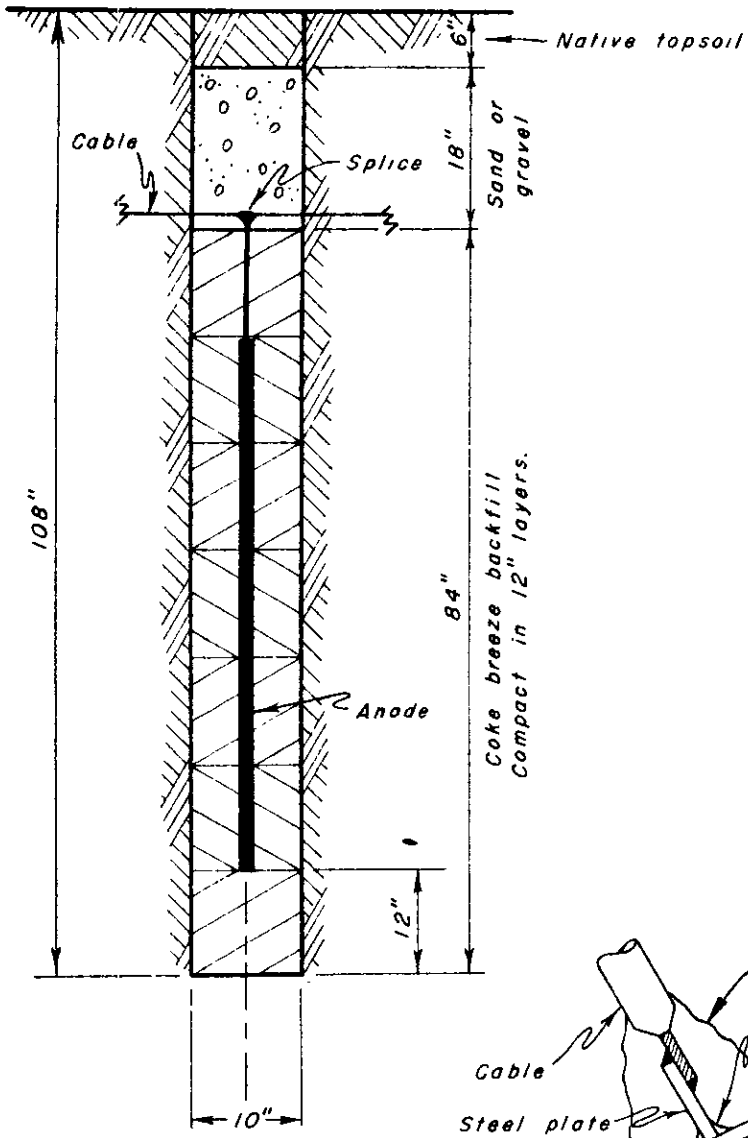

CABLE DETAIL

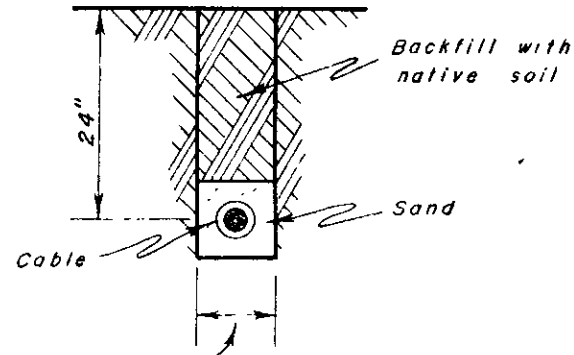

Cable trench width equals 3" plus O.D. of cable

Cable shall have a min of 1 1/2" sand blanket all around in expansive clay soils In sandy soils, omit sand blanket and trench width to be minimum of 1" plus O.D of cable.

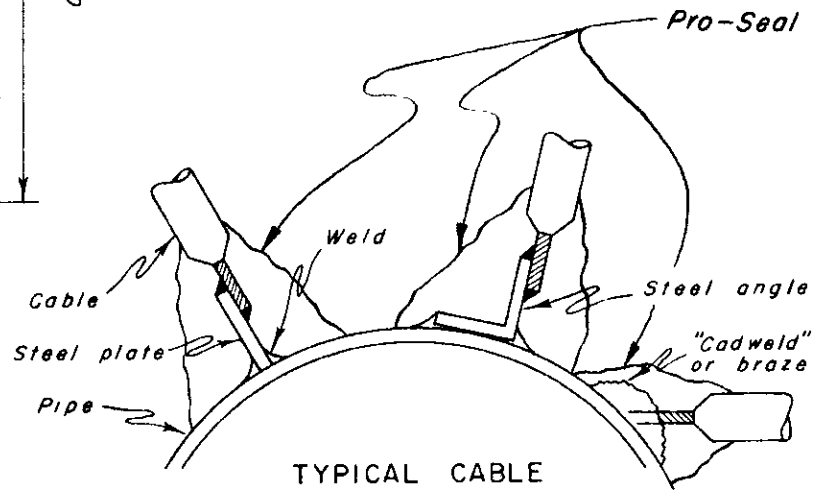

TYPICAL CABLE CONNECTIONS TO PIPE

Minimum dimensions of steel connector to be 3/8" thick and 2" in other directions. Cable to have a min of 1" length brazed or otherwise connected to steel connector or pipe The steel connector is to be welded all around. Pro-Seal EP-711, or equal, shall be spread a min of 1/4" thick 3" beyond all exposed metals used for connecting the cable to the pipe. When using pipe clamps, the metal surface is to be thoroughly cleaned for the area covered by clamp and then seal clamp and connection with Pro-Seal to minimum of 1/4" thick. A sand blanket shall be placed 6" in all directions from the cable connection prior to backfilling with native soil

ClibPDF - www.fastio.com

EXHIBIT III

CATHODIC PROTECTION
CABLE SPLICING DETAIL

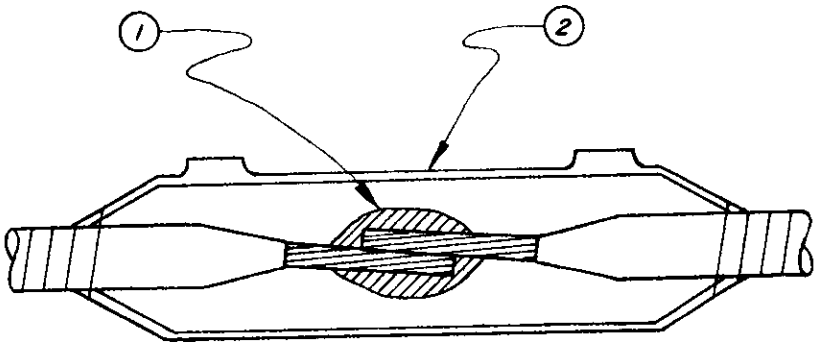

IN-LINE

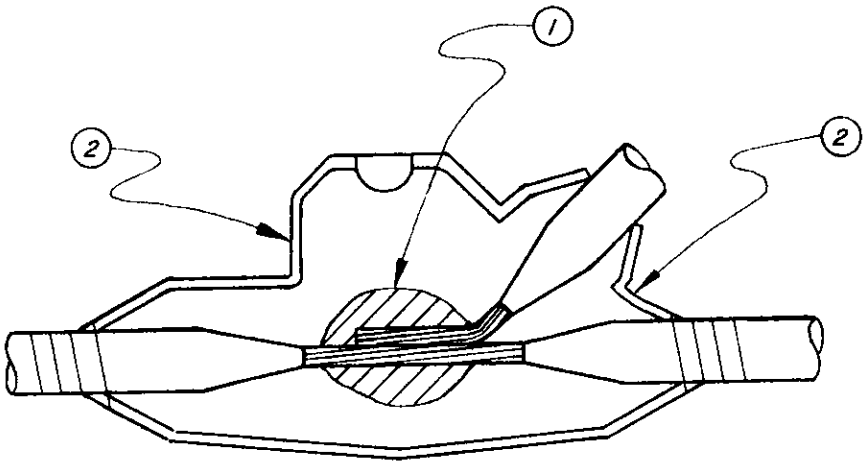

WYE

1. Weld connection by the Cadweld Process.

2 Scotchcast splicing Kit utilizing an epoxy type resin.

NOTE: Cable at the splice shall be free of dirt, grease, or other foreign matter prior to the application of sealing materials.

ClibPDF - www.fastio.com