STATE OF CALIFORNIA
DEPARTMENT OF PUBLIC WORKS
DIVISION OF HIGHWAYS

MEASUREMENT OF EXCESS HYDROSTATIC PRESSURES IN SOILS

By

William G. Weber, Jr.
Associate Materials and Research Engr.

Prepared for presentation
at
Third Pacific Area National Meeting of
American Society for Testing Materials
San Francisco, October 11 - 16, 1959

59-11

ClibPDF - www.fastio.com

MEASUREMENT OF EXCESS HYDROSTATIC PRESSURES IN SOILS

for presentation at the
October 1959 Meeting of the ASTM
in San Francisco

By

William G. Weber
Associate Materials and Research Engr.

SYNOPSIS

The California Division of Highways has been using the nonmetallic type piezometer developed by Professor Arthur Casagrande for use at the Logan International Airport. Many of these piezometers have been in place for several years. The factors affecting the installation and operation of the piezometers are presented. Several typical examples are given illustrating the type of data being obtained.

ClibPDF - www.fastio.com

MEASUREMENT OF EXCESS HYDROSTATIC PRESSURES IN SOILS

By

William G. Weber*

INTRODUCTION

The California Division of Highways has been using the nonmetallic type of piezometer during the past six years. This piezometer was developed by Professor Arthur Casagrande for use at the Logan International Airport. Long-time data have been obtained registering the excess hydrostatic pressures of the native soil underlying fills at several locations in California and are presented in this paper.

When a saturated soil is loaded rapidly, as by a fill in highway construction, the increased pressure upon the soil mass is carried for a time by the water phase of the soil. Drainage of the water from the soil will then allow a transfer of the increased pressure to the mineral soil particles. Measurement of the water pressure at a given point in the soil is the purpose of the piezometer. In order to record the water pressure at a point in the soil a free interchange of water between the soil and the piezometer is necessary. To record the true pressure of the water the porous medium must be sealed in the soil so that no drainage is allowed other than through the soil. California Division of Highways

---

*Associate Materials and Research Engineer, California Division of Highways, Materials and Research Department

ClibPDF - www.fastio.com

practice is to measure the pressure above the water table, or the excess hydrostatic pressure.

INSTALLATION OF PIEZOMETER

The piezometer being used by the California Division of Highways consists of a porous stone connected to a one-half inch plastic tubing by means of a rubber connector. The porous stone is placed at the desired depth in the soil either by inserting in a pipe casing or by pushing into the soil with a shield around the stone during installation. The cased installation is generally made in stiff or firm soils or pervious soils. A seal must be formed between the pipe and the soil and between the pipe and the plastic tubing. The uncased installation is generally made in soft to very soft silty clays and a seal must be formed between the plastic tubing and the soil. The cased and uncased installations are shown in Figure No. 1. Generally in a cased installation a sand filter is placed around the porous stone. Power equipment is generally required to make a cased installation and the cost of such installations is around $100 to $300 each. The uncased installation does not have a sand filter. The uncased installation can generally be made by two men in about a half hour at a cost of $20 to $30. The above costs are for that portion of the installation below original ground and do not include the costs of extending the installation to an accessible location.

ClibPDF - www.fastio.com

Two methods of measuring the pressure are used, the open system or the closed system. Both the open and closed systems have their advantages and disadvantages. In the open system the plastic tubing is extended through the fill, and the height of the column of water indicates the pressure. Accurate measurements of pressure can be obtained with the open system; however, the large amount of water that must be drained from the soil results in a large time lag in soils of low permeability. In the closed system a gage is attached to the plastic tubing, generally at the side of the fill. Where the lines are run to the side of the fill quarter-inch plastic tubes are used where the lines are horizontal. A double line system is used, that is one line connects to the gage and the other to a valve. Water can then be pumped through the quarter-inch lines to remove air from the system. In the closed system, since a very small inflow of water is required to indicate the pressure, the time lag is very small; however, removing air from the system has proved to be a considerable problem.

TYPICAL INSTALLATIONS

Salinas Bypass

A fill twenty-two feet in height was placed upon a heterogeneous soil containing sand, silty clay and peaty soil layers. (See Figure No. 2). Sand drains were used to expedite the settlement of this foundation. The piezometers were of the cased type using a one and one-half inch pipe without a sand filter around the porous medium. An open system was used.

ClibPDF - www.fastio.com

There was a tendency for the porous medium of these piezometers to clog. The time lag increased greatly towards completion of the fill.

A study of the excess hydrostatic pressures and settlement data indicates that the primary consolidation was completed when the surcharge was removed. Secondary consolidation has been occurring since completion of the fill. The excess hydrostatic pressures indicated by the piezometers agreed very well with the calculated values.

Candlestick Cove Open Water Fill

A fill was constructed across an arm of San Francisco Bay at Candlestick Cove. A working table was constructed by end dumping the fill into the soft bay mud, with a resulting displacement of much of the soft bay mud by the fill. Varying amounts of mud were entrapped beneath the fill. A compacted fill ten feet in height was then placed upon the working table.

During construction of the first section of the fill eight piezometers were placed in the soft bay mud underlying the working table. These piezometers were of the cased type with a sand filter, a closed system being used with the gage at the side of the compacted fill. When the compacted fill was completed all eight piezometers had failed. The compacted fill was removed from above two of the piezometers and the reasons for the failures investigated. It was found that the plastic tubing had been cut or broken at the lower end of the casing of both of these piezometers. This appeared to be due to the movement of the casing downward as the fill settled,

ClibPDF - www.fastio.com

and possibly due to a lateral flow of the soft mud.

In the second unit the porous medium was pushed a minimum of five feet past the lower end of the casing. No sand filter was used around the porous stone. The closed type system was used with the plastic tubing being extended through the fill. Twenty-two piezometers were installed in the second unit, one of which failed when a leak developed in the plastic tubing and the porous medium clogged. The remaining twenty-one piezometers appear to be operating satisfactorily five years after installation.

The data obtained at one location in the second unit are shown in Figure No. 3. The increase in excess hydrostatic pressure when the compacted fill was placed was 90 to 100 per cent of the weight of the compacted fill. The excess hydrostatic pressure then decreased at a slow rate as the fill remained without further loading. At the time of paving two feet of fill was placed upon the compacted fill; the piezometers reflected this increase in loading. It appears that the piezometers are reliably indicating excess hydrostatic pressures. The settlement to date at this location has been 4.3 feet.

Eureka Slough

The south approach fill to Eureka Slough was built over a soft silty clay which was stabilized by means of sand drains. Piezometers were installed without casing or sand filters being used. Both the open and closed type systems were used. The closed type systems had a time lag of five to fifteen minutes

ClibPDF - www.fastio.com

and the open type systems had a time lag of one to three hours. The porous medium in the closed type systems did not clog; however, they became very erratic as the pressure approached zero due to the gages reading a vacuum. Where the open system was used the porous medium clogged in two of eleven piezometers. The remaining open system piezometers appear to be giving reliable results at low pressures, and have been in operation for a period of four years.

The excess hydrostatic pressures indicated by four piezometers are shown in Figure No. 4. The excess hydrostatic pressures increased as the loading occurred and rapidly decreased after the loading was completed. Two settlement platforms were installed in this area, one at the original ground and one at about elevation -20. These settlement platforms indicate that rapid consolidation of the native soil from elevation -20 to the original ground surface occurred in about 200 days with only about 0.1 foot occurring after removal of the surcharge. The soil below elevation -20 is causing the settlement after removal of the surcharge. These settlement data are in agreement with the excess hydrostatic pressure readings.

Lafayette Bypass

The east approach fill to the Lafayette interchange was built over soft to firm silty clay. The fill was about forty feet in height. Cased piezometers with a sand filter were used with an open system extending through the fill. All piezometers that were installed appear to be functioning

ClibPDF - www.fastio.com

properly at the present. Five years after installation, however, the time lags have become very large, about 20 to 30 hours.

The excess hydrostatic pressures indicated by two piezometers at this location are shown in Figure No. 5. The settlement is continuing on a straight line on a semi-log plot. The excess hydrostatic pressures are decreasing slowly, indicating that primary consolidation is still occurring. The effect of the time lag may be noted on the reading at 175 days.

Hercules Interchange

The native soil at the Hercules Interchange consisted of a stiff preconsolidated silty clay. A fill of about forty feet in height was placed on this stiff silty clay, with ten feet of additional fill being placed as an overload to reduce the settlement after construction. Cased type piezometers with sand filters were used. The closed system with the gage at the toe of the fill was used. The piezometers were sensitive to changes in loading where the installations could be successfully de-aired. No piezometers failed during construction.

The settlement was essentially complete when the surcharge was removed. The piezometers indicated an excess hydrostatic pressure of 0.2 to 0.3 tons per square foot that has remained constant during the period after construction. The water table is being measured outside the fill area and it is probable that the water table is higher under the fill. A five to ten foot higher water table at the location of the piezometers would account for the apparent shift in the zero value of the excess hydrostatic pressure. Other than the apparent shift in the

ClibPDF - www.fastio.com

zero the piezometers appear to be functioning properly.

CHECKING INSTALLATIONS

The practice of the Division of Highways has been to periodically service and check all piezometer installations. This is done by specially trained personnel.

When taking a reading at a piezometer the pressure is increased and allowed to return to a stable reading. The time for 90 per cent change in pressure is noted. The pressure is then reduced and allowed to return to its stable reading. The time for the 90 per cent change in pressure is again noted. The stable readings must agree to within 0.05 tons per square foot of each other. If the stable readings vary more than 0.05 tons per square foot from each other the piezometer is considered of questionable value. In an open system a time lag of more than about five hours would indicate a system whose readings are of questionable value. In a closed system a maximum time lag of one-half hour is allowed.

In the closed system calibrated gages are used. To check the gages in the field the pressure is reduced to zero and the zero reading of the gage noted. When the gage indicates more than 0.3 pounds per square inch from the zero, with the pressure at zero, the gage is replaced. The closed system requires a check on the amount of air trapped in the lines. To check the amount of entrapped air the system is placed under a pressure of five to ten pounds per square inch. A sight tube is connected to one line and the valve to this

ClibPDF - www.fastio.com

line is opened. The rise of the water level in the sight tube then indicates the amount of air in the system. All systems are de-aired until less than two cubic inches of air at standard pressure remain in the system. The open system will de-air itself and this check is not necessary.

REMARKS ON THE OPERATION OF THE PIEZOMETERS

The nonmetallic type of piezometer system appears to be an improvement over the previous well point system. The reliability appears to have been increased; however, difficulties are still being encountered with the nonmetallic system.

In the well point system gas was often produced by reaction between the metals and the soil or water. This has been almost completely eliminated in the nonmetallic system. Occasionally difficulty has been encountered in de-airing the closed system. This is generally true where a vacuum is being recorded on the gage. The highest vacuum considered practical is five inches of mercury.

The porous medium used in the nonmetallic installations has proved to be very satisfactory. The porous medium allows a free interchange of water between the soil and the piezometer system. Some difficulty of clogging has been encountered with open systems. This has been overcome by adding small amounts of water to the open system so that only a portion of the water required will be drawn from the soil. With a closed system, clogging seldom occurs unless a leak develops.

A disadvantage of the nonmetallic system has been the structural weakness of the plastic tubing. There is a tendency

ClibPDF - www.fastio.com

for uncased plastic lines to be cut, pinched and otherwise damaged. To protect the plastic tubing a flexible steel tubing has been used where required. In sand blankets the plastic tubing generally has been used uncased.

The need for continuous checking of the piezometers by trained personnel is to the California Division of Highways a disadvantage that is hoped can be overcome. Routine readings are generally taken by field personnel on the various projects. Personnel from the Materials and Research Department visit the projects and check the operation of the piezometers. The California Division of Highways has under development a piezometer that it is hoped can be installed by untrained personnel and turned over to field personnel for use during construction. This piezometer will utilize an SR-4 strain gage on a diaphram to record the pressure. Laboratory experimental models have been subjected to two years of continuous testing and indicate that a field life of at least two years can be expected. The experimental models are being constructed from metals; however, it is hoped that the final field equipment can be constructed from nonmetallic materials. It is planned to place several of these piezometers in operation in the field during the summer of 1959.

SUMMARY

The California Division of Highways has been using the nonmetallic type piezometers developed by Professor Arthur Casagrande. Fairly reliable excess hydrostatic pressures have been indicated by these nonmetallic type piezometers.

ClibPDF - www.fastio.com

The installation and checking of the piezometers requires trained personnel that limits the scope of the work that can be done with piezometers by a highway department. Difficulty has been encountered in maintaining the installations during construction. A piezometer is being developed that it is hoped can be installed under nominal supervision and can be read by untrained personnel and will require little or no maintenance.

ClibPDF - www.fastio.com

ClibPDF - www.fastio.com

TYPES OF POROUS MEDIA INSTALLATIONS

CASED INSTALLATION

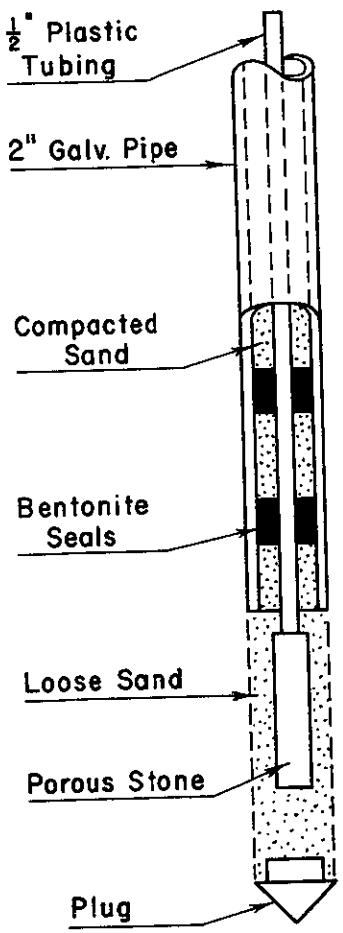

Steps in Installation

1. Push 2 inch pipe to desired depth, with plug on lower end.
2. Fill 2 inch pipe with water.
3. Raise pipe six inches.
4. Pour sand into pipe to fill the void in the soil to end of pipe.
5. Place porous stone and tubing in pipe.
6. Raise pipe 18 inches.
7. Fill pipe with sand until the sand is 1 foot above lower end of pipe.
8. Compact sand in pipe.
9. Place bentonite seal.
10. Place and compact sand above first seal.
11. Place second bentonite seal.
12. Fill pipe with sand.
13. Note rise or fall of water level in 1/2 inch plastic tubing.
14. Check bentonite seals.

Note:
Where 1½ inch pipe is used the porous stone and plastic tubing are placed in the pipe before pushing the pipe into the soil. The pipe is then raised the desired distance. Steps 7 to 14 above are then followed.

UNCASED INSTALLATION

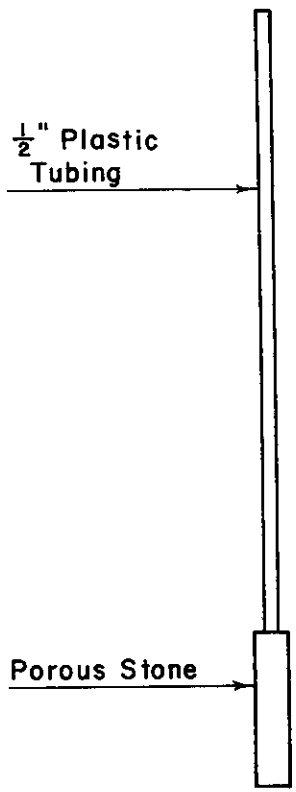

Steps in Installation

1. Push assembled porous stone and plastic tubing into soil to desired depth using shielded point and one inch tubing.
2. Fill system with water.
3. Withdraw one inch tubing and shielded point, being sure that the porous stone remains in place.
4. Check rise or fall of water level in 1/2 inch plastic tubing.
5. Check seal between soil and 1/2 inch plastic tubing.

Figure No. 1

EXCESS HYDROSTATIC PRESSURE READINGS OBTAINED AT THE MARKET STREET OVERCROSSING, SALINAS BYPASS

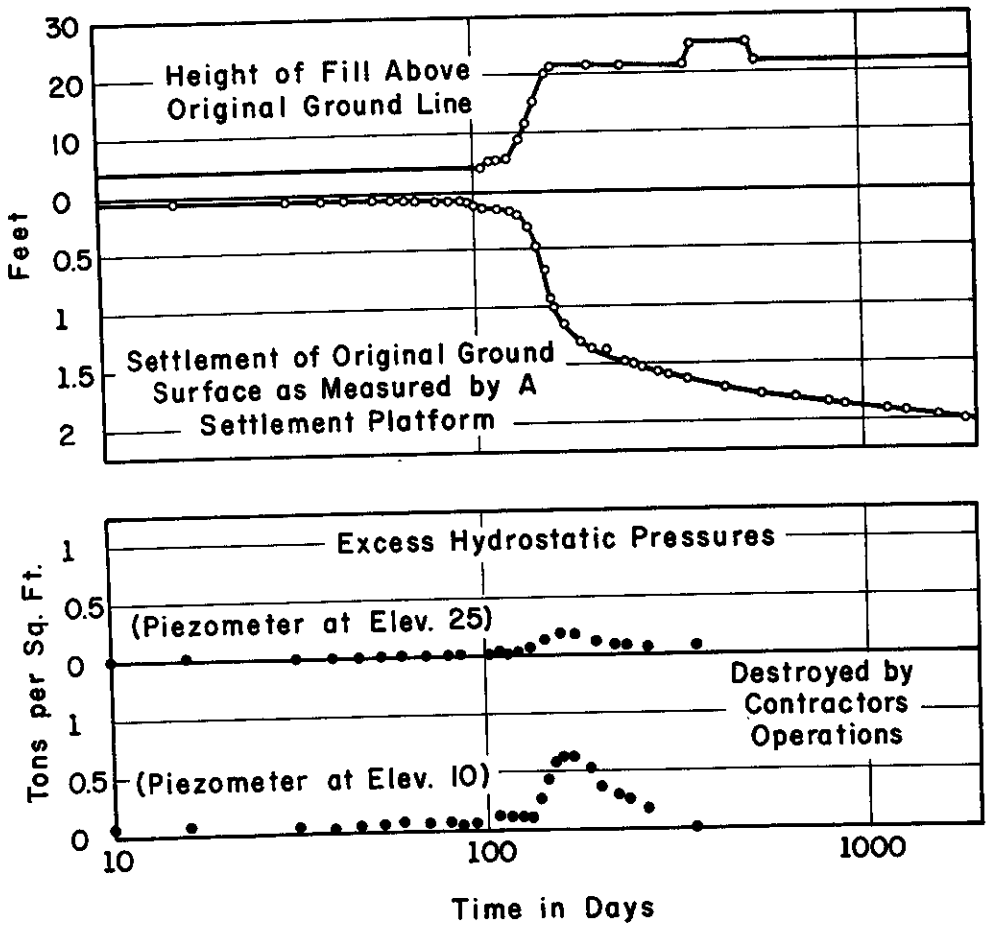

SOIL PROFILE

Sand drains on 10' by 10' spacing to a depth of Elev. -10

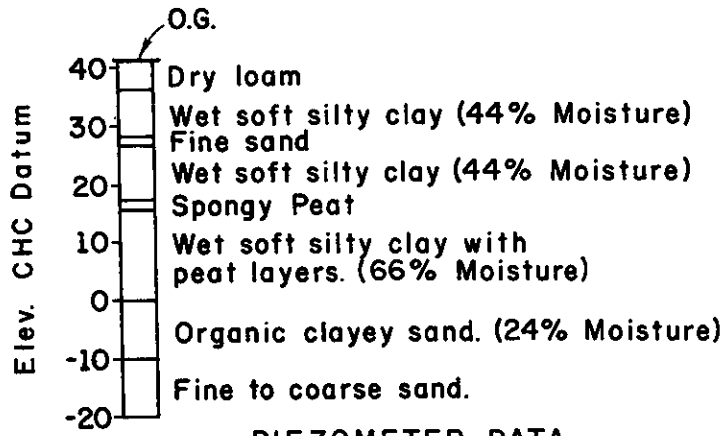

PIEZOMETER DATA

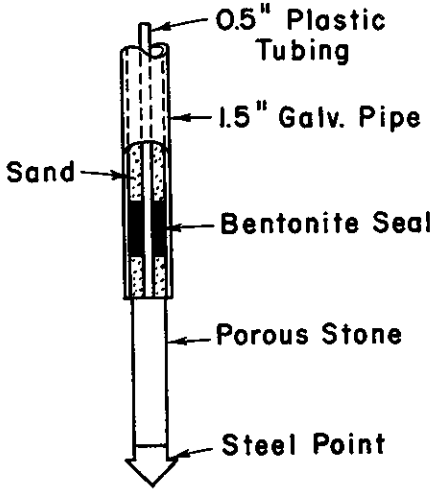

Open type piezometer system brought up through the fill.

Length of porous media is one foot.

Dia. of porous media is 1.5 inches.

No sand filter around porous stone.

Figure No. 2

ClibPDF - www.fastio.com

EXCESS HYDROSTATIC PRESSURE READINGS OBTAINED AT CANDLESTICK COVE

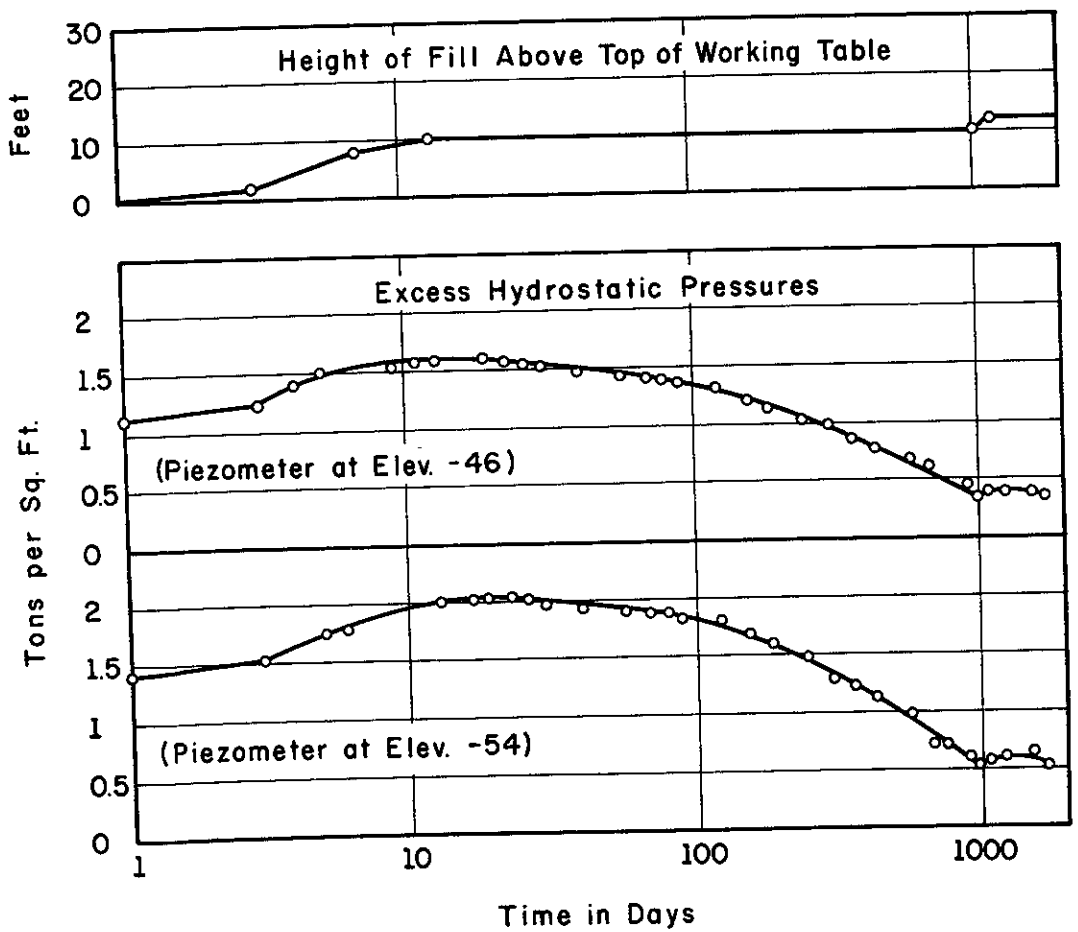

SOIL PROFILE

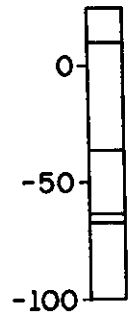

Compacted Fill.

Uncompacted fill placed by end dump method.

Wet soft grey silty clay.
Clayey sand to sand.
Wet stiff silty clay.

PIEZOMETER DATA

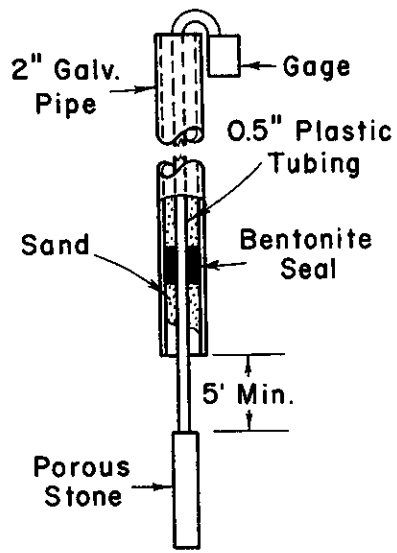

Closed type piezometer system w/ lines brought up through the fill.

Length of porous media is one foot.

Dia. of porous media is 1.5 inches.

No sand filter around porous stone.

Porous stone pushed a min. of 5' past the end of pipe for flexability.

Figure No. 3

ClibPDF - www.fastio.com

EXCESS HYDROSTATIC PRESSURE READINGS OBTAINED AT EUREKA SLOUGH

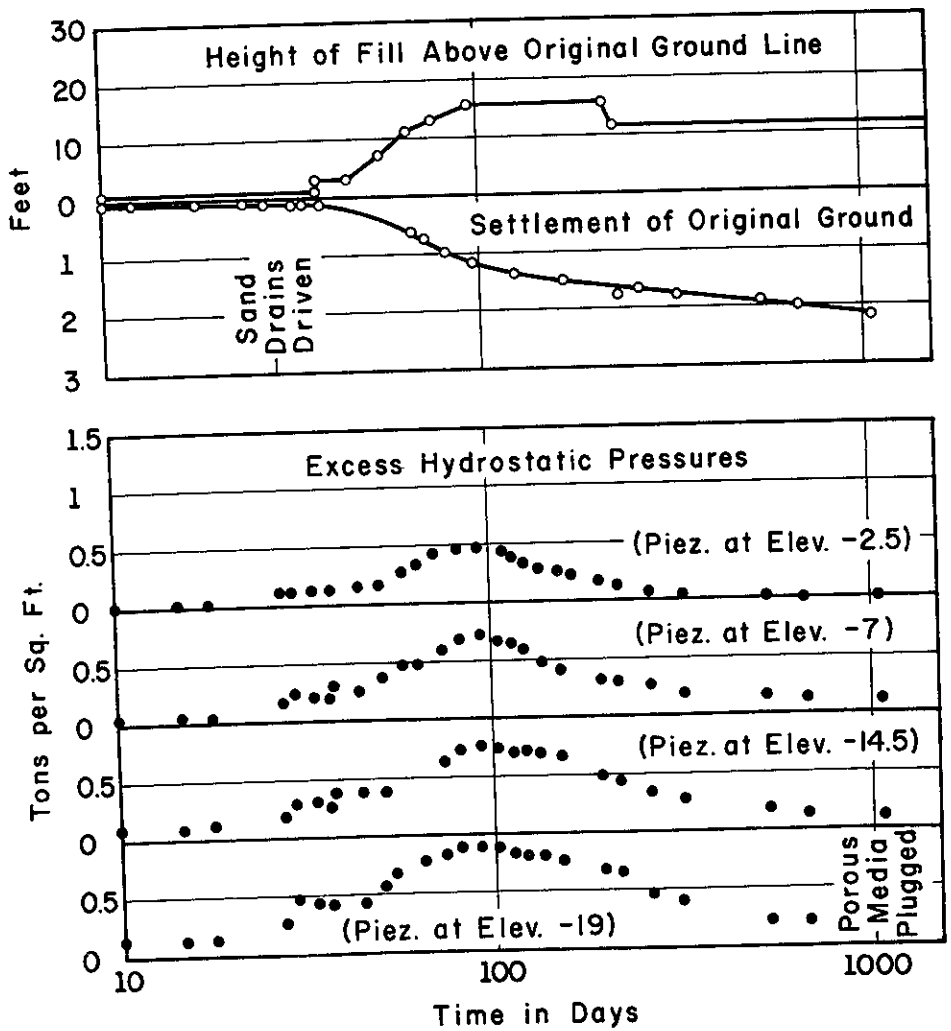

SOIL PROFILE

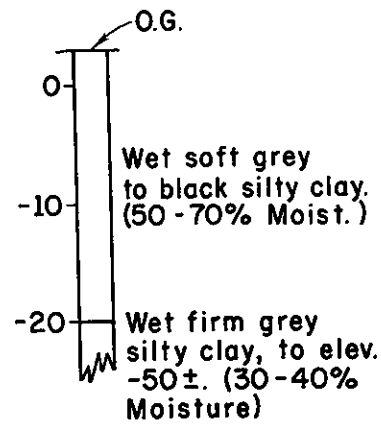

Sand drains to elevation -20 on a 10 ft. spacing.

The settlement of the top of the stiff, silty, clay layer was measured by a settlement platform at elev. -20±.

The 2 platforms indicate close to the same rate of settlement after removal of the overload.

PIEZOMETER DATA

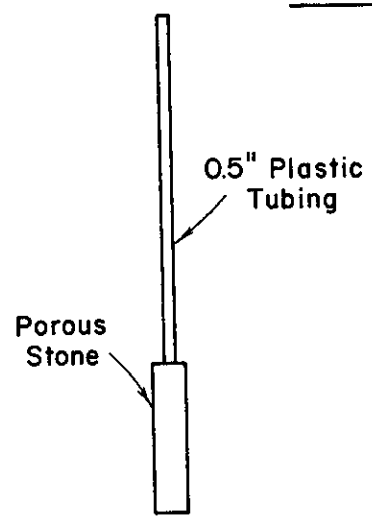

Open type piezometer system with plastic tubing brought up through the fill.

Length of porous media is 1 ft.

Dia. of porous media is 1.5 in.

No sand filter used.

Porous stone and plastic tubing installed by being pushed into the soil with 1.25 inch rods and a thin walled shield around the porous stone.

The tubing and shield were withdrawn leaving the porous stone and Plastic tubing in place.

Figure No. 4

ClibPDF - www.fastio.com

EXCESS HYDROSTATIC PRESSURE READINGS OBTAINED AT THE LAFAYETTE BYPASS

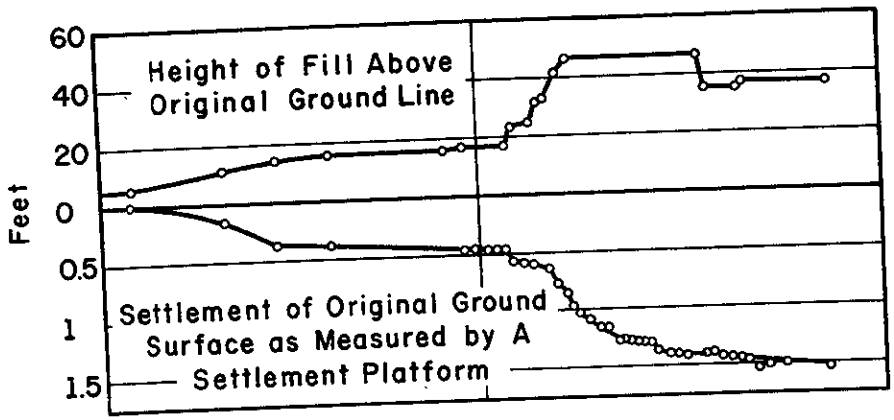

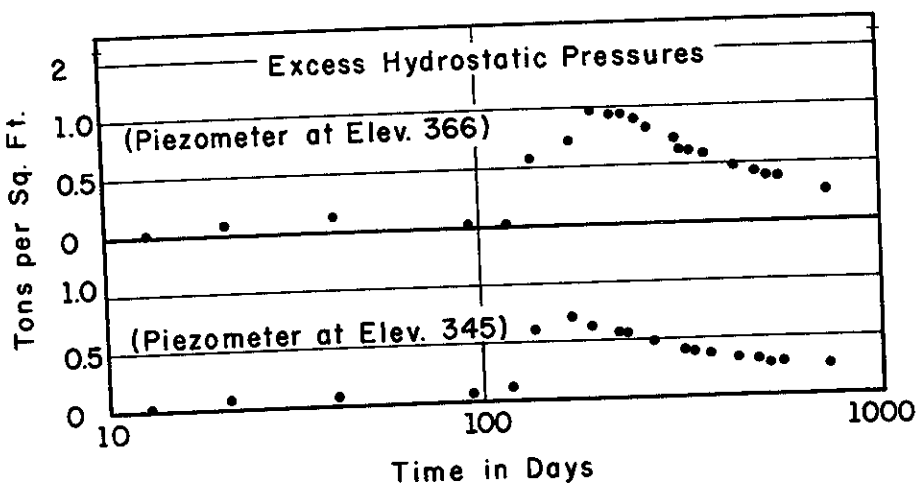

SOIL PROFILE

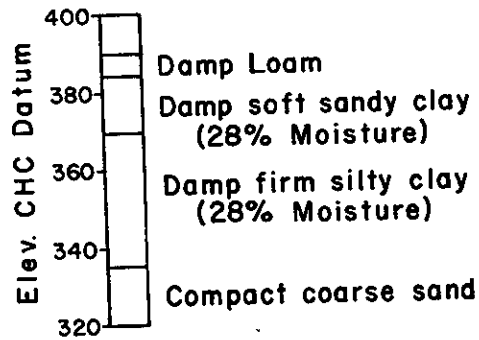

Fill placed at a controlled rate of not more than 5 feet per week.

PIEZOMETER DATA

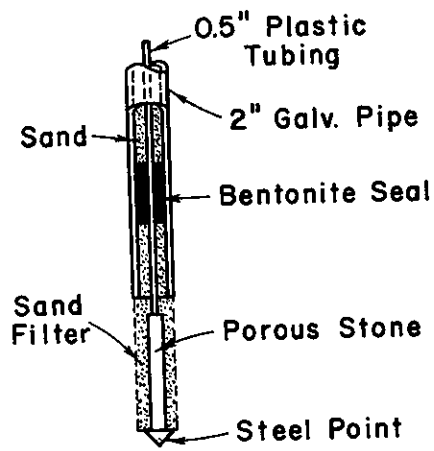

Open type piezometer system brought up through the fill.

Length of porous media is 2 feet.

Dia. of porous media is $2\frac{3}{8}$ inches.

Concrete sand used in sand filter.

Figure No. 5

ClibPDF - www.fastio.com

EXCESS HYDROSTATIC PRESSURE READINGS OBTAINED AT THE HERCULES INTERCHANGE

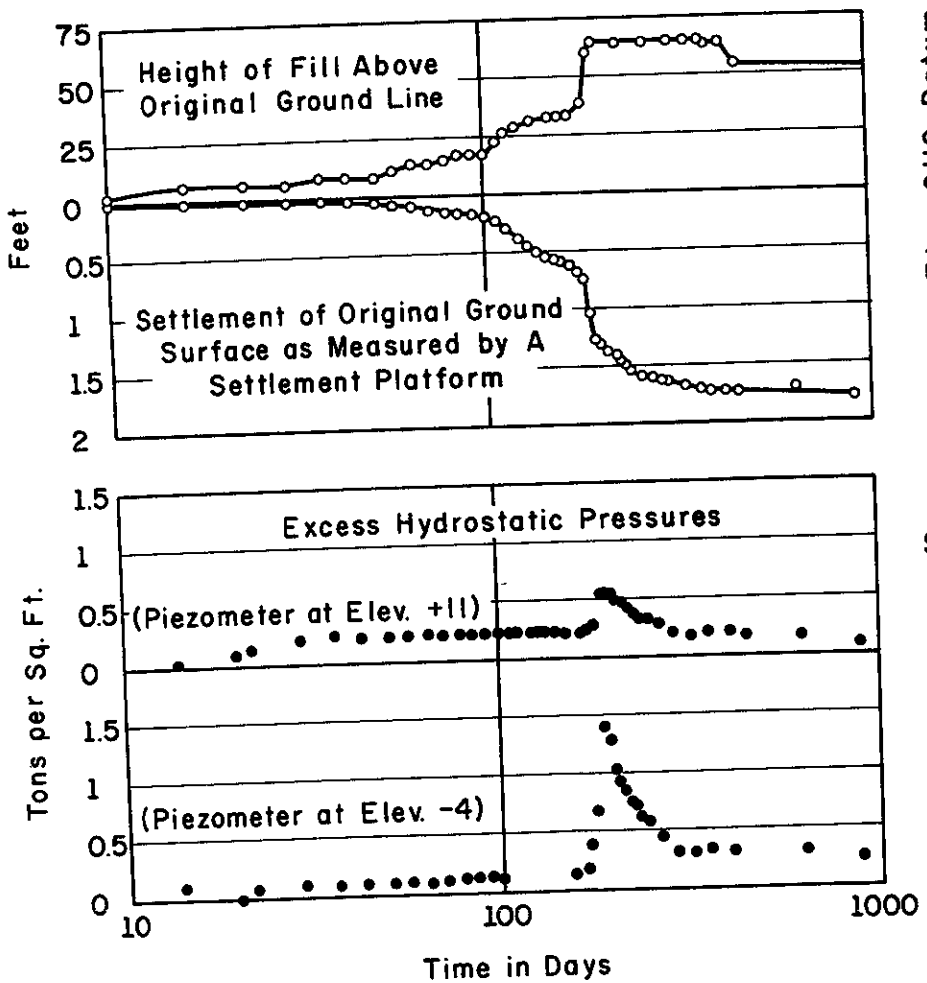

SOIL PROFILE

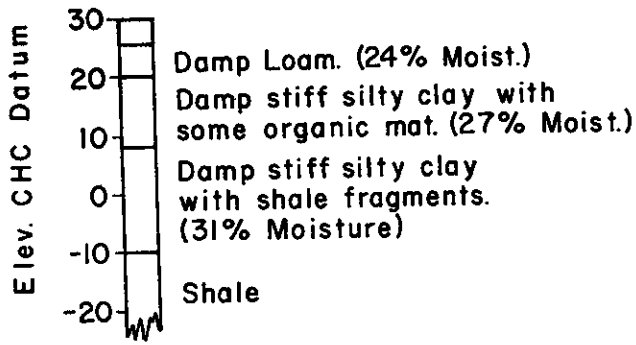

Consolidation tests indicate that the soil is preconsolidated to a loading equivalent to about 23 ft. of fill.

PIEZOMETER DATA

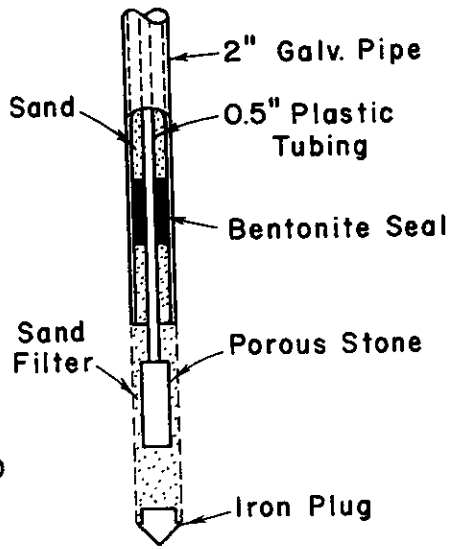

Closed type piezometer system with gages run to side of fill.

Length of porous media is 2 feet.

Dia. of porous media is $2\frac{3}{8}$ inches.

Ottawa sand used in filter media.

Single .25 in. O.D. line used to connect piezometer with gage.

Figure No. 6

ClibPDF - www.fastio.com