REPORT NO. FHWA-CA-TL-78-17

# DYNAMIC MEASUREMENTS OF COMMERCIAL HIGHWAY VEHICLES (WEIGHING-IN-MOTION)

FINAL REPORT

JUNE 1978

Caltrans

CALIFORNIA DEPARTMENT OF TRANSPORTATION

ClibPDF - www.fastio.com

## NOTICE

The contents of this report reflect the views of the Office of Transportation Laboratory which is responsible for the facts and the accuracy of the data presented herein. The contents do not necessarily reflect the official views or policies of the State of California or the Federal Highway Administration. This report does not constitute a standard, specification, or regulation.

Neither the State of California nor the United States Government endorse products or manufacturers. Trade or manufacturers' names appear herein only because they are considered essential to the object of this document.

ClibPDF - www.fastio.com

TECHNICAL REPORT STANDARD TITLE PAGE

| 1. REPORT NO. | 2. GOVERNMENT ACCESSION NO. | 3. RECIPIENT'S CATALOG NO |
|---|---|---|
| FHWA-CA-TL-78-17 | | |

| 4. TITLE AND SUBTITLE | 5. REPORT DATE |
|---|---|
| DYNAMIC MEASUREMENTS OF COMMERCIAL HIGHWAY VEHICLES (WEIGHING-IN-MOTION) | June 1978 |
| | 6. PERFORMING ORGANIZATION CODE |
| 7. AUTHOR(S) Lawrence E. Welsh, R. L. Donner, C. E. Frazier, R. Johnson | 8. PERFORMING ORGANIZATION REPORT NO. 19103-631594 |
| 9. PERFORMING ORGANIZATION NAME AND ADDRESS Office of Transportation Laboratory California Department of Transportation Sacramento, California 95819 | 10. WORK UNIT NO |
| | 11. CONTRACT OR GRANT NO. C-1-15 |
| 12. SPONSORING AGENCY NAME AND ADDRESS California Department of Transportation Sacramento, California 95807 | 13. TYPE OF REPORT & PERIOD COVERED Final |
| | 14. SPONSORING AGENCY CODE |

15. SUPPLEMENTARY NOTES

This study was conducted in cooperation with the U.S. Department of Transportation, Federal Highway Administration.

16. ABSTRACT

The research objectives were to design and install an operational high speed truck weighing system to screen out vehicles with probable weight violations and direct them to a static platform scale to be stop-weighed and cited if in violation of California statutes. Other vehicles would use a bypass lane where they could be observed for potential safety hazards or other violations before allowing non-violators to return to the freeway without stopping.

Six pairs of electronic scale weigh bridges were installed in a special off-ramp on Interstate 80 at Cordelia, California. A high speed, minicomputer based data acquisition and control system collected data from the scales, determined the axle weight, gross weight, axle spacing, and speed.

Typical gross weight errors were two to three percent of static weight as measured at the platform scale. Occasionally errors exceeded ten percent. The feabibility of weighing-in-motion on an operational basis was verified. Further study is needed to provide a more reliable weigh bridge and to improve the Data Acquisition and Control System operation. New state-of-the-art systems and components should be evaluated with the objective of incorporating the best features into a fully operational system.

| 17. KEY WORDS | 18. DISTRIBUTION STATEMENT |
|---|---|
| Dynamic weighing, high speed weighing, weighting-in-motion, truck scales. | No restrictions. This document is available to the public through the National Technical Information Service, Springfield, VA 22161. |

| 19. SECURITY CLASSIF. (OF THIS REPORT) | 20. SECURITY CLASSIF. (OF THIS PAGE) | 21. NO. OF PAGES | 22. PRICE |
|---|---|---|---|
| Unclassified | Unclassified | 74 | |

DS-TL-1242 (Rev.6/76)

ClibPDF - www.fastio.com

ClibPDF - www.fastio.com

STATE OF CALIFORNIA
DEPARTMENT OF TRANSPORTATION
DIVISION OF CONSTRUCTION
OFFICE OF TRANSPORTATION LABORATORY

June 1978

FHWA No. C-1-15
TL No. 631594

Mr. C. E. Forbes
Chief Engineer

Dear Sir:

I have approved and now submit for your information this final research project report titled:

DYNAMIC MEASUREMENTS OF COMMERCIAL HIGHWAY VEHICLES
(WEIGHING-IN-MOTION)

Study made by . . . . . General Services Branch

Under the Supervision of . . . . . Wallace H. Ames, P.E.

Principal Investigator . . . . . Robert L. Donner, P.E.

Co-Investigator . . . . . Lawrence E. Welsh, P.E.

Report Prepared by . . . . . Lawrence E. Welsh, P.E.
Robert E. Donner, P.E.
Charles Frazier

Very truly yours,

George A. Hill

GEORGE A. HILL
Chief Office of Transportation Laboratory

Attachment

LEW:lb

ClibPDF - www.fastio.com

ClibPDF - www.fastio.com

ACKNOWLEDGEMENTS

Many people from various organizations have made significant contributions to this project. The personnel at the Fairfield Maintenance station, under the supervision of Ralph Buss, were extremely helpful with their ideas and manpower.

The California Highway Patrol (CHP) has cooperated fully with us in our efforts. Among those offering assistance were Captain Edward Kynaston, Lieutenant Charles King, Sergeant Loren Zeiss of Headquarters Enforcement Services Division, Commercial Vehicles Section in Sacramento and Captain Bruce Emery and Sergeant Gordon Muir of the field office in Vallejo.

At the Transportation Laboratory, the Machine Shop under the supervision of Floyd Martin and then Joe Wilson helped us many times in our efforts to make the weighing project operational.

Those working directly on the project at various stages included Leonard Alsop, James Butts and Richard Johnson. The programming of the computer for the high speed data acquisition system and also for the data reduction was accomplished by Charles Frazier.

To all the many others who aided us in this project that have not been mentioned, a very sincere "Thank you".



ClibPDF - www.fastio.com

ClibPDF - www.fastio.com

TABLE OF CONTENTS


| | Page |
|---|---|
| INTRODUCTION | 1 |
| CONCLUSIONS AND RECOMMENDATIONS | 3 |
| FURTHER RECOMMENDED DEVELOPMENT | 5 |
| DYNAMIC WEIGHING TEST CONFIGURATION AND OPERATION | 8 |
| EQUIPMENT | 10 |
| CONTROL & EVALUATION SOFTWARE | 13 |
| TECHNICAL DISCUSSION | 19 |
| ANALYSIS OF DATA | 25 |
| REFERENCES | 30 |
| FIGURES | 31 |
| APPENDIX | 48 |




ClibPDF - www.fastio.com

ClibPDF - www.fastio.com

# INTRODUCTION

Since the State of California Department of Highway Patrol (CHP) first commenced enforcing vehicle weight laws, the primary method of detecting overweight vehicles has been to stop and weigh them on platform scales. The current method used is as follows:

The truck is directed from the freeway by a manually operated or electronic changeable message sign to a weigh station on a special off-ramp. The vehicle is directed to come to a complete stop, then proceed across a 10 ft by 12 ft (3.05 m x 3.66 m) platform scale at a maximum speed of 3 mph (4.38 kmh). The CHP weighmaster then reads the individual axle weights as the vehicle proceeds across the scales. He records the weights, rounded to the nearest 100 lbs (45.4 kg), on an adding machine to obtain the gross vehicle weight. If the truck exceeds a predetermined weight, based on distance between first and last axle, a citation is issued by a CHP officer and the overload must be corrected before the truck is allowed to continue. Citations are also issued if an individual axle exceeds 20,000 lbs (9072 kg), if a group of axles exceeds predetermined weights based on the distance between the axles or if the gross weight exceeds a predetermined weight based on the wheelbase length of the vehicle.

The above procedure is time consuming causing queues of trucks to back up into the freeway lanes. This is a safety hazard to truckers and motorists alike. In addition if a violation is suspected, the truck driver must circle around the scales and come in again for a "stop-weight" check of the violating axle or axles. This "stop-weight" procedure is even more time consuming, causing a more severe safety hazard.

To reduce the safety hazard, the message on the directive signs have generally been changed to direct only loaded trucks to come



ClibPDF - www.fastio.com

to the scales. This allows some relief to the scales, but also allows loaded trucks the opportunity to slip by. At times the sign must be changed to indicate the scales are closed to allow the queue of trucks to be reduced to a safe number for the allowable lane storage available. This temporarily allows all trucks to go by the scales without either being weighed or visually observed for safety violation of the vehicles.

In an effort to improve efficiency of vehicle weight enforcement as well as safety and efficiency of highway operation, and to minimize delay and inconvenience to the trucking industry the California Transportation Laboratory in cooperation with the Federal Highway Administration, designed and placed into operation an experimental "high-speed" truck screening operation. This installation which was located on westbound Interstate 80 at the Cordelia weighing facility, about 45 miles (72.4 km) west of Sacramento, utilized strain gage load cell weighing bridges in a system capable of weighing trucks at speeds up to 35 mph (56.3 kmh).

As the trucks passed over the high-speed scales, the axle weight, axle spacing, speed and gross weight were determined. The weight, and axle spacing were compared with the California load laws to determine if the vehicle is a possible violator. Suspected violators were directed to the platform scales to be weighted statically. Other trucks were directed to a "bypass" lane next to the scale lane where they were observed to determine if their safety inspection sticker was current or if they had some obvious safety hazard. If they were observed to have an outdated inspection sticker or a safety hazard existed, they could be stopped by a signal light and directed by a loud speaker system to drive into an inspection area to be further examined. However, if the



ClibPDF - www.fastio.com

sticker was current and there were no obvious safety deficiencies, they were allowed to proceed in the by pass lane without stopping and to return to the freeway with a minimum of lost time.

## CONCLUSIONS AND RECOMMENDATIONS

1. The practicality of weighing-in-motion on a day-to-day operational basis has been proven. At our particular site, there are geometric problems to be overcome. The weighmaster could not always see the vehicle which was being detected as a possible violator, as the weighmaster is located 800 feet (243.8 m) downstream from the high speed scales location. A closed circuit television (CCTV) installation could be used to solve this problem.

2. Typical results show an error in gross vehicle weights approximately two to three percent of the static weight obtained at the platform scales with some gross weight errors exceeding ten percent. Individual axle weights observed varied as much as forty percent of the static weight as measured at the platform scales. This was probably due to the roughness of the pavement leading to the scales and immediately surrounding the scales. This could have been improved by further grinding of the PCC pavement and possibly applying an epoxy overlay. The extremely large axle weight errors did not always contribute to large gross weight errors, apparently due to the purposely designed nonuniform scale spacing and to the sampling method included in the computer program which uses the least deviation from the mean of four successive samples to determine the force a wheel exerts on a scale. This force is then averaged over all six scales.

3. Additional work will be required to improve the reliability of some of the electronic equipment. In the early stages of our



ClibPDF - www.fastio.com

project the high speed scanner (multiplexer) - analog-to-digital converter was a continual problem. We eventually re-designed some of the circuitry and improved on its operation. More reliable equipment is now on the market and this should be used in any future installations.

4. It is recommended that further developmental work be done to provide more reliable operational weighing transducers. The strain-gage load cell weighbridges installed at Cordelia proved to be less than satisfactory. We suffered a failure rate of over fifty percent in the transducer itself. Continual efforts to maintain the load plates level with the pavement to eliminate "rocking" or "hammering" on the load cell were unsuccessful. Our machine shop made several modifications in an effort to minimize the excessive maintenance work required. Some success was achieved by milling out the surrounding metal and adding a locknut to reduce movement of the leveling screw. A modified 3-point load plate is now available from the manufacturer (1) which, it is claimed, will eliminate the leveling or "rocking" and "hammering" problem.

Recent literature has shown a scale with the load cell in tension which the manufacturers (2) claim eliminates the problems encountered in our installation at Cordelia. These newer scales should be examined for applicability to high speed weighing.

In review, we recommend a continuation of the effort to bring the system concept proven at Cordelia to full operational status. The anticipated additional work necessary to accomplish this is detailed in the "Further Recommended Development" statement.

---

(1) Rainhart Co., Austin Texas Model 881/882.

(2) "The Development of An Automatic Highway Scale," A. Bergan; G. Dyck; presented to the Canadian Technical Asphalt Association, Toronto, Ontario, November 1975.



ClibPDF - www.fastio.com

5. We find in evaluating our data and comparing this data with the results obtained from other organizations involved in high speed weighing that our data compares favorably with the results obtained in the United States and Canada. In general it appears that dynamic systems developed and in use by others are utilized for developing loading history rather than for law enforcement.

## FURTHER RECOMMENDED DEVELOPMENT

It is recommended that existing equipment and facilities at the Cordelia site be used to test and evaluate new developments in weighing transducers. Our intermittent operation of this experimental system over a 2-year period indicates that the following modifications should improve the reliability and overcome many of the present operational difficulties; and ultimately should result in a practical system that can be used as a standard in weighing stations.

### Geometric and Design Improvements

The first step to possibly improve the data obtained would be to improve the approach to the scale area by grinding and/or resurfacing to reduce the roughness of the present pavement.

Currently, it is possible for the truck to miss one or more of the scales in the lane. Although this may cause the system to abort that run and direct the truck to the scales, it can occasionally cause a number of internal system difficulties. To overcome this difficulty, it is recommended that guardrail or 3-inch (76.2 mm) pipe railing extending over the outside edge of the scales be installed to guide the trucks through the lane.



ClibPDF - www.fastio.com

The overheight indicators are presently located between the last pair of scales and the directional signals. These indicators should be moved to a location within the scale area - preferably spanning the last pair of scales. At this location, positive identification of an overheight truck could be made by the system.

In order to eliminate a major source of confusion to the drivers, either the directional signals should be moved closer to the scales or a programmed signal delay, based on truck speed, should be incorporated into the system. At the present time, the directional signals are set immediately after the truck leaves the scales. If the trucks are in a queue, the directional signal is set for a truck possibly two or three vehicles behind the one viewing the signal.

Hardware Changes

A closed circuit television (CCTV) system should be installed to assist the weighmaster in determining which vehicle was in violation. If a queue of five or six vehicles is waiting to be weighed statically, the view to the dynamic scales is blocked and the weighmaster cannot identify the violator.

The overheight indicators have ceased to function and are no longer in use. The estimated cost to repair them is at least $600 each ($1,200 total). More reliable solid state units are now available and should be purchased to replace the present vacuum tube units.

It is imperative that some positive means be incorporated to determine the presence or absence of a vehicle in the scale lane. This could be accomplished by the installation of either



ClibPDF - www.fastio.com

a series of magnetometers placed down the center of the scale lane at 6-10 feet (1.8-3.1 m) centers or installation of photocells directed diagonally across the scale lane.

It is recommended that the most promising newly developed dynamic weighing scales be evaluated for potential solution of operational problems which were experienced in the prototype system.

Our search for new equipment would place great emphasis on a scale or scales with maximum resistance to wear, vertical movement, or malfunction due to impact loading. This requirement is necessary as any change in elevation between the pavement and the truck scales magnifies impact to the truck tires and suspension system which increases error and variations in readings. New dynamic scale transducer designs may be developed from combining good features of other systems.

## Program Modifications

The present computer program (implemented in 1975) does not include the recent statuatory changes to the allowable loads which became effective in 1976. A new algorithm to agree with the revised definitions (shown in Figure 3 of this report) must be developed.

Program modifications to incorporate the geometric and hardware changes recommended above should significantly increase system reliability.

## Additional Parameter

In additon to weight, axle spacing and height information, other parameters could be measured and recorded at a dynamic weighing



ClibPDF - www.fastio.com

site. Width measurement could be obtained and violations indicated. Width is a much more difficult measurement to make than height but vertical photocell arrays have been designed to accomplish this. Automatic vehicle identification is another input which could be used to determine origin and destination or to determine the expiration of safety inspection. Current methods to identify vehicles include a passive microwave label developed by Fairchild Corp. and used by the U.S. Army and the multi-color optical I.D. System used by the railroad industry.

## DYNAMIC WEIGHTING TEST CONFIGURATION AND OPERATION

This dynamic weighing project was conducted at the Cordelia Weigh Station, operated by the California Highway Patrol, on Interstate Highway 80 about 45 miles (72.4 km) west of Sacramento and 48 miles (77.2 km) east of San Francisco, Calif. as shown in Figure 1. The plan view of the site is shown in Figure 2. This weigh station, as most of the larger stations in California, includes weighing and observing trucks to determine those that are overweight, overwidth, or overheight and inspection to determine vehicular safety equipment deficiencies. The operation of the scales is discussed in the introduction of this report. The purpose of this study was to place dynamic weight measuring equipment in the approach to the static scales in order to screen out the obvious weight violators from the obvious non-violators and allow the non-violators to proceed without delay on a bypass lane. This would result in less delay to the trucker, shorter queues, and lower workload on the weigh-master at the scales.

As shown in Figure 2, the trucks would be directed to the off-ramp leading to the scales by a changeable message sign. Although the data acquisition equipment would be able to obtain wheel weights



ClibPDF - www.fastio.com

at truck speeds approaching 35 mph (56 Km/h), the off-ramp is posted for a 10 mph (16 Km/h) speed limit. This lower speed across the dynamic scales allows a greater number of wheel load samples to be obtained and also allows the trucker sufficient time to correctly interpret the directional signals to the bypass lane or to the static scales.

Immediately in front of the dynamic scales is an inductive loop vehicle detector to alert the data acquisition equipment of the approaching vehicle. As the vehicle traverses the weighing area, each dynamic scale is sampled at the rate of 200 readings/second. This is equivalent to approximately 14 valid samples/tire/scale assuming a 10 mph (16 Km/h) speed and a tire print of 1 foot (0.3 m). Of the samples obtained from each dynamic scale for a given wheel, the mean of those 4 consecutive samples having the least sum of absolute deviations from its mean is used as the wheel weight obtained for that scale. The axle weight is determined by summing the wheel weights obtained on each scale and dividing by the number of scale pairs (in this case n=6) in the system. The speed of the vehicle is determined from the amount of time the first axle takes to traverse the last two scale pairs. The axle spacing is then determined from the time-space relationship of subsequent axles.

With the axle spacing and weight information the computer then proceeds to calculate the combined weight of axle groups and the gross weight of the vehicle. This information is compared with the vehicle code shown in Figure 3. If a violation is detected, the computer changes the directional signal to route the truck to the static scales by displaying a red light on the bypass lane and a green arrow pointing to the static scales. At the static scale house detailed information is stored on digital magnetic tape for future computer analysis. Summary information can be printed on a teletype.



ClibPDF - www.fastio.com

In addition to teletype printouts of all potential violators, or optionally all truck data, the weighmaster is notified of the potential violation through a control box mounted by the scale console. The control box allows him to manually control the directional indicator or to put them under computer control. It also indicates to him by an audible tone that a violation has occurred and by lights what the class violation was, e.g. gross, axle or group of axles. For more detail of the exact weights and which axle, the weighmaster may refer to the teletype printout.

## EQUIPMENT

The equipment scheme used in this dynamic weighing project is shown in the block diagram in Figure 4. In order of data flow this figure shows the wheel load transducers, the high speed multiplexer, the minicomputer, the directional signals, the weighmasters indicator and control box, the display board, the digital magnetic tape unit, and the teletype printer.

### Wheel Load Transducer

The wheel load transducer assembly is shown in Figure 5. It consists of a transducer frame which is placed on bearing pads grouted into a scale pit approximately 3-1/4 inches (82.6 mm) deep. The scale frame supports the electronic load cell chassis. The chassis contains eight active and eight temperature compensating strain gage load cells which are wired together in the configuration of a wheatstone bridge as shown in Figure 6. The vehicle load is transmitted to these load cells through three one inch load plates which are placed upon the top of the load cell chassis. All of the electrical connections on the electronic



ClibPDF - www.fastio.com

load cell chassis and to the outside road are made through sealed copper tubing which is pressurized with nitrogen gas which precludes the intrusion of moisture into the electronic system.

The load cells in their wheatstone bridge configuration are excited with a DC power supply of approximately 30 volts, this voltage is adjustable in order to calibrate the individual scales. The output of the scales is approximately 10 millivolts for a full load input of 10 kips. The output of the scale platform is amplified by a DC amplifier and wired to the input of the multiplexer/analog-to-digital converter.

Multiplexer/Analog-to-Digital Converter

The output signals from the load cells are connected to the twelve inputs of the multiplexer/analog digital converter. This device subsequently scans the transducers at a rate of approximately 10,000 samples per second, amplifies the signal to an acceptable level, then converts the magnitude of the analog signal to a corresponding digital code acceptable for transfer to the computer.

Digital Computer

The digital computer used in this system performs four basic functions; collection and reduction of the data presented from the load cells to determine the equivalent static weight of each axle on a vehicle, comparison of these weights with the vehicle code to determine violations, controlling the traffic signals for the vehicle, and providing information to the weighmaster through the control box lights and/or teletype.



ClibPDF - www.fastio.com

## Directional Signals

Two 2-faced directional signals are placed over the bypass lane and the static scale lane. These signals display either a combination of a green arrow to the bypass lane and a red ball to the static scales or a green arrow to the static scales and a red ball to the bypass lane. These directional signals can be operated under computer control or manually by the weighmaster.

## Weighmaster Control Box and Display Panel

A control box is placed near the weighmasters static scale console which allows him to control the directional indicators manually or under computer control. This box also contains lights to indicate the type of violation of the truck entering the static scale area. These lights indicate gross violations, axle violations, combination of axle violations, or an abort. An abort indication is signaled to the weighmaster when for some reason the computer is unable to determine the actual weight of the vehicle. This situation can occur when the trucker has changed speed drastically through the scale platform area or has driven in the shoulder area where proper weight determination cannot be made. In these cases, the truck will always be weighed.

## Digital Magnetic Tape and Teletype Printer

A digital magnetic tape unit is provided to permanently record all dynamic weights from the digital computer. These weight records contain the truck number, the time of day, and each individual wheel weight determination. This information can also be printed on the teletype printer in a format shown in Figure 7. This teletype printer output can be of assistance to the weighmaster to determine the actual type of violation which has occurred.



ClibPDF - www.fastio.com

## CONTROL & EVALUATION SOFTWARE

The computer program for this project was written in assembly language and uses the direct memory access option for output operations to the (teletype) printer and the 9-track digital magnetic tape recorder. Simplified flow charts for the data acquisition section and the data reduction section are attached. Other sections not shown include the site initialization routine, the daily startup routine and the diagnostic routines which provide a histogram of multiplexer readings and continuous output of readings from a selected multiplexer channel.

In describing the operations of the data acquisition and reduction sections of this program, it is necessary to describe certain attributes of the system and nomenclature:

> There are an even number, N, of dynamic scales and associated multiplexer channels. All even numbered scales are used to read the loads on one end of each axle and all odd numbered scales are used to read the loads on the opposite end of each axle.
>
> For each scale, there is a value, ZER(I), consisting of the sum of a constant representing the cutoff value below which multiplexer readings are disregarded and a variable representing the most current multiplexer reading at no load.

When the scale is loaded, the multiplexer value is driven negative proportionally to the applied weight. To determine whether to use this value in estimating the applied load, ZER(I) is added to the value. If the resultant is negative, this value becomes MUX(I) during subsequent operations. (The true weight factor is found



ClibPDF - www.fastio.com

by adding the ZER(I) to the absolute value of MUX(I).) If the resultant is positive, the number of immediately prior consecutive negative values for that scale is placed in MUX(I).

When a truck approaches the scales, it is assigned one of eight truck information storage buffers, TISB, which is used to store data for the first 9 axles on that truck. This data includes the truck number, time of day, data for each axle from each scale, timing data to determine axle spacing and speed and violation or abort information. This information is then stored on 9-track magnetic tape for later analysis and evaluation.

For each scale, I, there is a scale buffer containing the following:

V(I,1) Through (V(I,4) = the latest four MUX(I) obtained in the current weighing cycle.

PNTR(I) = A pointer to the earliest V(i,j) obtained (to be replaced by the next MUX(I) in current cycle)

SUM(I) = The current sum of (V(I,1) through V(I,4).

LAD(I) = The lowest sum of absolute deviations of V(i,j) from the mean, SUM(I), found in the current cycle.

ADDR(I) = An address in TISB for storage of the mean having a minimum value of LAD(I).

AFLG(I) = First axle indicator and axle counter.

SCNTS(I) = Number of consecutive negative MUX(I) obtained.



ClibPDF - www.fastio.com

## Program Operation

Operations occur in two distinct areas or program sections. Primarily, the program operates in the data reduction and output section, EXEC, to be described later. Every 5 milliseconds, current operations are suspended or interrupted and control is given to the data acquisition and evaluation section.

## Data Acquisition and Evaluation

STEP 1 - Data Acquisition

A multiplexer reading is obtained for each scale at 100 μsec. intervals.

a. If no truck is in the scale area the readings obtained are used to update each modified scale zero value, ZER(I). Go to step 3.

b. If a truck is in the scale area, MUX(I) = multiplexer value + ZER(I) is calculated.

1. If MUX(I) is positive (indicating an invalid reading), the value in SCNTS(I) is placed in MUX(I). SCNTS(I) and V(I,1) to V(I,4) are set to zero.

2. If MUX(I) is negative, both SUM(I) and PNTR(I) are updated.



ClibPDF - www.fastio.com

STEP 2 - Data Evaluation - for each MUX(I)

a. If MUX(I) is less than zero, increment SCNTS (I) and replace V(I,PNTR(I) with MUX(I) if SCNTS(I) is greater than 3.

1. Calcualte the sum of absolute deviations from SUM(I)/4 for the V(i,j).

2. If the resultant is less than LAD(I), store resultant in LAD(I) and store SUM(I)/4 in TISB at ADDR(I).

b. If MUX(I) = 0, no action.

c. If MUX(I) is greater than Ø, initialize the scale vector for the next wheel.

1. If scale (N) or (N-2), store time interval in TISB for determination of axle spacing.

2. If scale (N) or (N-1), check for abnormal operation and set proper flag in TISB as axle leaves that scale.

3. If not scale (N) or scale (N-1) and first axle is leaving, initialize ADDR(I) and AFLG(I) for the next scale in series. (Scale I+2)



ClibPDF - www.fastio.com

STEP 3 - Update Truck Counters

a. If manual reset is on and all output operations are complete, set 'on' and 'off' truck counts equal to the 'output' truck count. Then go to step 4.

b. If the 'off' loop detecter has changed from 'on' state to 'off' state, increment 'off' truck count.

c. If the 'on' loop detector has changed from 'off' state to 'on' state:

1. Increment 'on' truck count.

2. Assign, in order, one of eight TISB's to the oncoming truck. Store truck number and time of day in the assigned TISB.

3. Store proper TISB addresses in ADDR(1) and ADDR(2), initialize AFLG(1) and AFLG(2).

STEP 4 - Update Time of Day

STEP 5 - Return to Suspended Operation

Data Reduction and Output

Program 'EXEC' is primarily used to direct control to the data reduction routine when data for each truck axle is complete and to initiate output operations to the printer and/or 9-track magnetic tape at the proper time. While cycling, it also checks the overheight indicators and a manually set end of day indicator.



ClibPDF - www.fastio.com

As indicated on the attached flow chart (Figure 9), printed output occurs each time the data for an axle has been reduced. After data for the last axle has been printed and TISB for that truck is written onto magnetic tape and then the gross weight, distance from first to last axle and any violations or abort indications are printed. 'EXEC' cycles through this sequence until directed to the end of day routine which, after a clean-up procedure, halts all operations.



ClibPDF - www.fastio.com

## TECHNICAL DISCUSSION

The high speed scale layout is located approximately 800 ft (243.8 m) upstream from a 10 ft by 12 ft (3.05 m by 3.66 m) platform scale, static weighing station at Cordelia in a specially modified off-ramp from the freeway. The portland cement concrete paved lane containing the weigh-in-motion scales is built to State of California Standard Specifications except with the addition of No. 6 reinforcing bars longitudinally at 6 in. (152.4 mm) centers located at depth of 5 ins. (127 mm) and No. 4 bars transversely at 18 in. (4.57 m) centers. The bars extend to within 1 1/2 ins. (38.1 mm) of the joints. Reinforcement was added to minimize variations in pavement profile due to thermal and moisture variations and thereby to minimize dynamic effects on wheel and axle loads as they pass across the weigh-in-motion scales. A parallel or by-pass lane is provided to allow maintenance of the scales. Maximum truck volume is approximately 2,100 vehicles per day in August decreasing to 1,100 vehicles per day in December.

The scales are located with an increasing longitudinal distance between units as shown in Figure 8. This spacing was designed to minimize the probability that the vibration frequency (or some harmonic) of the truck suspension or tires would correspond to the distance between transducers at some responsive speed. The spacing between the first and last transducer assembly layout is approximately 44 ft (13.4 m).

The scale frames, which are still in place, are installed in a high strength epoxy adhesive to preclude their working loose. The electronic strain gage, load cell scales, manufactured by Rainhart Company of Austin, Texas, are approximately 22 ins.



ClibPDF - www.fastio.com

by 49 ins. (.56 m by 1.24 m). The scales were installed in pairs so that the wheels on opposite ends of an axle were weighed individually, but at the same time. There were six pairs of scales in the installation, with provision for a seventh pair. Dry nitrogen was supplied directly to each electronic chassis from a manifold with individual pressure regulators for each chassis. The nitrogen tank was replaced with a full tank about once a month during the system operation.

The truck screening project was in operation intermittently between November of 1974 and early 1977. A statistical experiment was designed and performed in May of 1975 with a loaded five axle truck. Unfortunately a scale failed during the test and the results were not meaningful. Six of the scales had failed during the period between November 1974 and June 1975. These were returned to the manufacturer for repair (as they failed) and were re-installed upon their return from the manufacturer.

In August of 1975, (due to administrative action outside the control of the project) the operation was shut down and all the electronic gear moved from the office trailer near the dynamic scales into the weighmaster's scale house. This involved digging trenches, placing the signal power and loop detector wiring inside schedule 80 PVC pipe and burying them 18" below grade in a sand bed. This move added an additional 600 feet of wire in the signal circuits with the attendant shielding and noise problems. We were not able to return to operation until the end of December 1975.

During early 1976 we worked at resolving the various problems we had faced before. Different methods were tested to reduce the hammering and rocking of the load plates. Our machine



ClibPDF - www.fastio.com

shop put in many hours working on the various ideas put forth in the hopes of eliminating the problem. Improvements were made but these actions did not solve the problem that we feel is due to the basic load plate assembly design.

In March of 1976 we began a series of tests to determine the overall system reliability and accuracy. The scales and system were recalibrated by the local (Solano County) Weights and Measures Authority. During this testing period we experienced computer program problems as we could not correlate the magnetic tape truck number and data with the paper tape (Teletype) truck number and data. As we had developed several computer programs to analyze the magnetic tape data, we were forced to halt the tests until we could resolve the truck count error problem. A partial solution was reached whereby we could reset the truck number to keep the program running correctly.

A new series of tests were run during June of 1976 which we feel proved feasibility of the system concept. The data from those tests with our analysis is shown in the Appendix.

## Loop Detectors

Two loops are used in the pavement, with their associated loop amplifiers, to determine if there is a truck in the scale area. One loop is 6 ft (1.83 m) upstream from the first pair of scales; the second loop is 6 ft (1.83 m) after the last pair of scales. The trucks are counted in and out by the computer program.

## Height Indicators

Two standard photo-electric height indicators are located approximately 22 ft (6.7 m) after the last pair of scales. One indicator is 13.5 ft (4.1 m); the other is 14.0 ft (4.27 m)



ClibPDF - www.fastio.com

above ground in accordance with the State of California Vehicle Code. An audible alarm alerts the weighmaster at the static scale when a vehicle exceeds either height limit. As mentioned before this system failed but can be easily upgraded to a reliable system through the use of off-the-shelf equipment at a nominal cost.

## Electronic Equipment

The data acquisition and control system used to obtain wheel weight, axle spacing and speed consists of the following units:

1. 12 Strain Gage Power Supplies.

2. Multiplexer/Analog to Digital converter.

3. 16 Bit Minicomputer with 4K of Core Memory, Real Time Clock, Direct Memory Access, and 32 Bits of Digital Input/Output.

4. Teletype.

5. 9-Track, 800 bpi. Digital Magnetic Tape Recorder.

6. Violation Indication Display.

## Overall Description of Truck Screening Installation

Twelve separate strain gage power supplies furnish power to the electronic scale chassis. This allows each scale to be calibrated very easily. The force exerted by the tire on the transducer assembly produces an output signal voltage proportional to that force with each 10,000 lbs (4,536 kg) increment of force producing a ten millivolt signal. The excitation voltage and the output



ClibPDF - www.fastio.com

signal voltage are brought to each transducer in 0.5 in. (1.27 cm) diameter copper tubing which also supplies a protective envelope of dry nitrogen gas at a slight positive pressure of 2 psi (1,406 kgs/$m^2$). The nitrogen gas is used to impede moisture from entering the strain gage load cells.

The output signal voltage (proportional to the vertical force) is connected to the Multiplexer/Analog to Digital converter. This device sequentially scans the transducers at a rate of 13,900 samples per second, amplifies the signal to an acceptable level, then converts the magnitude of the D.C. signal to a corresponding binary code acceptable for transfer to the computer.

In the computer the vertical forces exerted by the wheel on the transducer assembly are averaged over the four successive samples above a pre-selected cutoff value which have the least deviation from their mean. This average force is then added to the average force obtained for the wheel on the other five scales as that wheel goes over each scale. This sum is then divided by six to obtain an overall average weight for that wheel. This average force is added to the average force obtained for the wheel on the other end of the axle to obtain an average axle weight. This process is repeated for each axle of the vehicle as it crosses each of the six pairs of transducers.

The computer program, written in Assembly language, is contained in 3,500 words of the available 4,096 words.

During the time the truck is being dynamically weighed, the space between axles is also determined to the nearest 1 ft (.305 m). Knowing the axle weight and spacing, the truck can then be compared with the load laws as set forth in the Vehicle Code. If a violation is detected, the system prints the type of violation on the



ClibPDF - www.fastio.com

teletype and by means of overhead signals, directs the truck to the platform scales to be re-weighed "statically" by the weighmaster. If the truck is determined to be in violation of the load laws, the driver is cited and must correct the violation before he can move the vehicle from the weighing station. Vehicle speed is also calculated and if a change in speed of more than 25% is detected, an "abort" situation is declared. The vehicle is then directed to the platform scales to be weighed.

If the vehicle is not in violation and does not "abort", it is directed by means of the overhead signals to a by-pass or "hot" lane to allow it to return to the freeway without being stopped at the platform scales.

Violations are indicated to the weighmaster by a small display mounted in front of him. The weighmaster has control of the overhead signals and can direct all vehicles to come to the platform scale if he so wishes. This is to allow the weighmaster to determine if the truck needs a mechanical inspection, or to see if it has some obvious safety deficiency.



ClibPDF - www.fastio.com

## ANALYSIS OF DATA

### Conclusions

1. The use of a dynamic weighing system as described in this report can be used effectively in reducing the number of vehicles that need to be weighed on static scales to determine compliance with vehicle code requirements. Based on a "typical" day where 2148 vehicles entered the scale area, approximately 20% would be directed to the static scales as 'possible violation' and approximately 6% would be 'aborted'. Some of these 'aborted' vehicles were light-duty vehicles and would not be weighed.

2. Significant differences were obtained in the precision of weighing between scale pair combinations. Because of the method used in collecting data for analysis, the reason for these differences, (distance between scale pairs, scale characteristics or other factors) could not be determined. Using the present dynamic scales, it is felt that adequate screening of vehicles can be accomplished using the 4 scale pair combination listed in the following table.

Based on least-square linear regression analyses and using a 99% confidence level, the following table lists those scale combinations found to be most effective in determining axle loads:

| No. of Scale Pairs | Scale Pair Nos. | % Variance of Actual Load (.99 CL) Single Axles | Tandem Axles* |
|---|---|---|---|
| 6 | All | 15.3 | 8.2 |
| 5 | 2,3,4,5&6 | 15.2 | 8.0 |
| 4** | 2,3,4&6 | 16.1 | 8.0 |
| 3 | 2,4&6 | 17.4 | 8.6 |
| 2 | 2&6 | 19.8 | 9.2 |

*Based on 34-Kip axle loading.
**Recommended scale-pair combination.



ClibPDF - www.fastio.com

3. It is imperative that means be taken to insure that the full wheel load is impressed on each dynamic scale as the vehicle traverses the scale area. Allowing one wheel to come only in partial contact with the dynamic scale not only could allow an overweight vehicle to bypass the static scales, but also has caused errors in minicomputer data storage routines.

## Data Collection

To determine the accuracy of axle weights obtained using the dynamic scales, 'stop weights' were obtained on each single axle and pair of tandem axles on 162 trucks selected at random from those statically weighed on March 25 and June 15, 1976. These 'stop weights' were obtained by having the truck move over the platform scales until a single axle or pair of tandem axles was isolated on the weighing platform. The driver was then requested to release the vehicle's brakes to relieve platform friction and the weight was recorded to the nearest 100 pounds (45.4 kg). This 'stop weight' data was then used with the dynamic scale data obtained for that truck in these analyses. In this manner, data for 435 single axles and 175 tandem axles was collected over the two days.

## Data Preparation

Because stop weights were not obtained on individual axles of tandem axle groups (less than 5 feet (1.52 m) between axles), the dynamic scale data for the two axles were combined for comparison with the static weights. The data was then screened to eliminate those outliers which could be identified as either geometric design deficiencies and/or operational problems. The remaining data was separated into two groups; one containing data on 429 single axles and the other containing data on 171 tandem axles.



ClibPDF - www.fastio.com

## Analysis of Data

Step 1 The first step of analysis consisted of performing least-squares regression analyses using the mean of all dynamic scale-pair readings as the response variable and the residual of dynamic minus static scale readings as the dependent variable for each group as shown in Figure A1 for the single axle group and Figure A2 for the tandem axle group. Inspection of these results indicated that, although this analysis was adequate for the tandem axle group, the variances for the single axle group appeared to be proportional to the dynamic scale reading. Dividing the residual by the static weight and using this result as the dependent variable for the single axle group provided the regression shown in Figure A3 Although this may have caused slight overcompensation for the variances, it was considered suitable for this analysis.

This step in the analyses resulted in determining the following generalized equations to be used in subsequent steps:

For single axle determinations:

$$(D-S)/S = B\emptyset + B1*D$$

For tandem axle determinations:

$$D-S = B\emptyset + B1*D$$

Where BØ = Intercept value
B1 = Slope
D = Weight from dynamic scale-pairs
S = Static stop weight.

Step 2 This step consisted of performing regression analyses on each combination of dynamic scale-pairs using from 2 to 6 pairs of dynamic scales. In addition to obtaining regression



ClibPDF - www.fastio.com

coefficients and other parameters required for further analysis, 'critical values' were calculated for designated significance levels in each analysis. The 'critical value' for a designated significance level is that dynamic scale value having the significance level probability of 20 Kip single (or 34 Kip tandem) static weight. This critical value is the dynamic scale value above which vehicles should be directed to the static weighing scales.

Following the table of critical values are tables showing the actual number of axles above and below vehicle code requirements, the number of axles which would 'pass' or must 'stop' for static weighing and the 'calculated' or normal curve probabilities for these occurrances. In all of these analyses, the calculated violations were higher than the actual violations for both single and tandem axles indicating the degree of non-conformity to a normal probability distribution resulting from previous assumptions made in this analysis and departure from normally distributed axle weights in the data. These differences were minimal for the recommended scale-pair combinations.

Step 3 This stop consisted of a 'dummy run' of the 162 vehicles for which 'stop weight' data was collected including those vehicles where data contained outliers which were not used in steps 1 and 2. Using the regression parameters obtained in step 2, tables of actual and calculated operational values were calculated for each of 5 significance levels. Only single axle and tandem axle violations were considered in this Step and in Step 4.

Step 4 This step consisted of simulating the results from a 'typical' day. Based on the data stored on magnetic tape by the system on June 15, 1976 and using various dynamic scale-pairs, the same procedure as was used in step 3 was used to develop information concerning the effectiveness of the dynamic



ClibPDF - www.fastio.com

scales. It should be noted that the number of calculated violations are exceptionally high when compared to the 8 actual violations that occurred.

Two sources which probably were the major cause of this discrepancy were:

a. The actual legal load limits of 20 Kips on single axles and 34 Kips on tandem axles was used in this analysis. In actual practice, however, tolerances of up to 5% are allowed on the static weights before the load is considered to be in violation.

b. It was noted particularly in Figure A3 that the distribution of axles by load was a bimodal distribution, and the distribution of residuals in the 15 to 20 Kip range were negatively skewed. This analysis was based on a normal curve distribution and no correction was made to correct for this skew.

It appears that, using the four dynamic scale-pairs recommended in this section, approximately 50 percent of the 1068 vehicles actually weighed on this 'typical' day would have been allowed to bypass static weighing with negligibie probability of having a weight violation. This assumption is based on the type of each violation recorded for this 'Typical' day and the proportion of vehicles stopped for static weighing to the number of vehicles found in violation of the vehicle weight code.



ClibPDF - www.fastio.com

## REFERENCES


1. Department of Civil Engineering, University of Kentucky, "Weighing Vehicles in Motion," HPS-HPR-1(25), April 1964.

2. Herrick, R. C., "Analytical Study of Weighing Methods for Highway Vehicles in Motion," HRB, HR7-3, July 1967.

3. Lee, C. E., and Al-Rashid, N. I., "A Portable Electronic Scale for Weighing Vehicles in Motion," Report 54-IF, Center for Highway Research, University of Texas at Austin, April 1968.

4. Machemehl, R. B., Lee, C. E., and Walton, C. M., "Truck Weight Surveys By In-Motion Weighing," FHWA Project 3-10-74-181, September 1975.

5. McCann, H., Dean, E., and Boale, R., "The Texas Procedure for Weighing Trucks in Motion," DOT, FHWA, Highway Technical Report #36, May 1974.

6. Burgess, J. P., and Smith, R. A., "Evaluation of Dynamic Vehicle Weighing System," Paper Presented I.T.E. Conference, Halifax N.S., April 1975.




ClibPDF - www.fastio.com

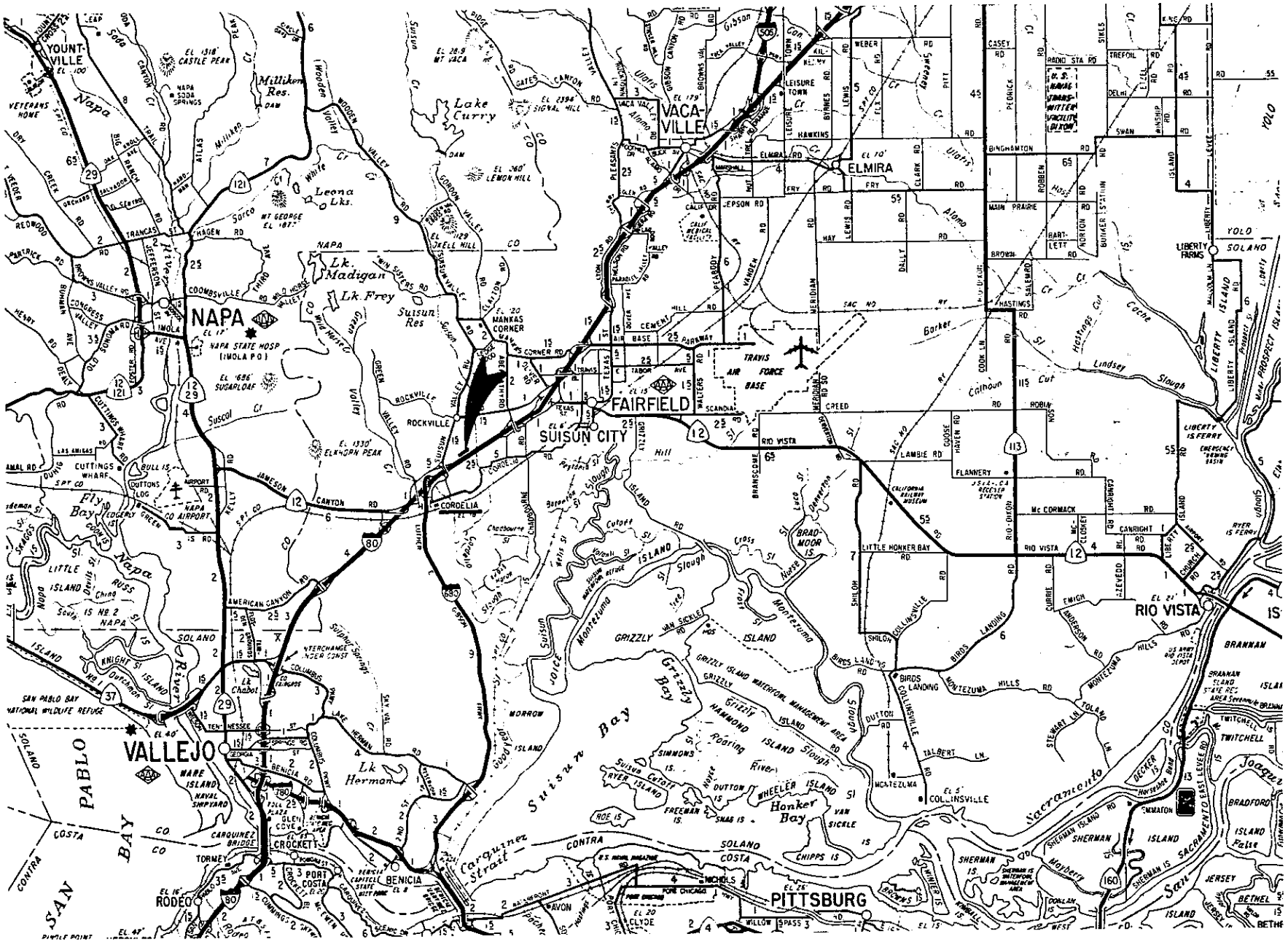


DYNAMIC WEIGHING SITE CORDELIA, CALIFORNIA

FIGURE 1



ClibPDF - www.fastio.com

ClibPDF - www.fastio.com



PLAN VIEW OF DYNAMIC WEIGHING SITE

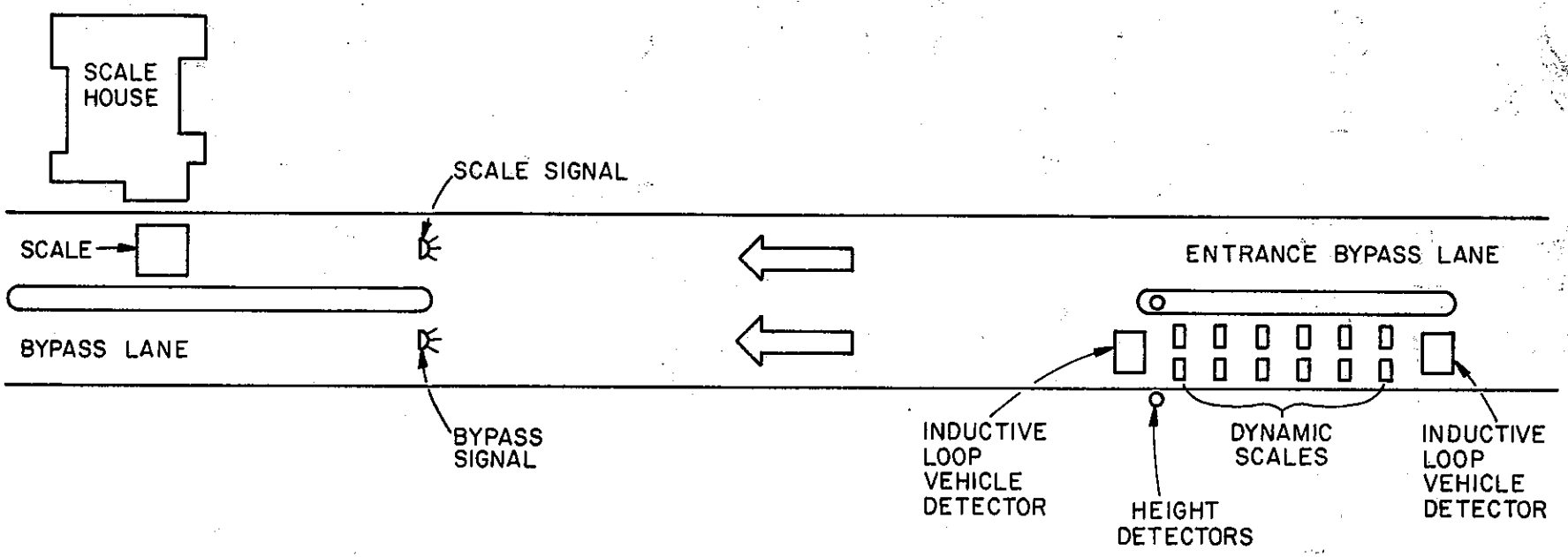


FIGURE 2

ClibPDF - www.fastio.com



## Article 1. Axle Limits

### *Maximum Weight on Single Axle or Wheels*

35550. (a) The gross weight imposed upon the highway by the wheels on any one axle of a vehicle shall not exceed 20,000 pounds and the gross weight upon any one wheel, or wheels, supporting one end of an axle, and resting upon the roadway, shall not exceed 10,500 pounds, except that the gross weight imposed upon the highway by the wheels on any front steering axle of a motor vehicle shall not exceed 12,500 pounds.

(b) The gross weight limit provided for weight bearing upon any one wheel, or wheels, supporting one end of an axle shall not apply to vehicles the loads of which consist of livestock.

(c) The following vehicles are exempt from the front axle weight limits specified in this section:

(1) Trucks transporting vehicles.
(2) Trucks transporting livestock.
(3) Dump trucks.
(4) Cranes.
(5) Buses.
(6) Transit mix concrete or cement trucks, and trucks that mix concrete or cement at, or adjacent to, a jobsite.
(7) Motor vehicles that are not commercial vehicles.
(8) Vehicles operated by any public utility furnishing electricity, gas, water, or telephone service.
(9) Trucks or truck tractors with a front axle at least four feet to the rear of the foremost part of the truck or truck tractor, not including the front bumper.
(10) Trucks transporting garbage, rubbish, or refuse.
(11) Trucks equipped with a fifth wheel when towing a semitrailer.
(12) Tank trucks which have a cargo capacity of at least 1,500 gallons.

Amended Ch. 268, Stats. 1959. Effective Sept. 18, 1959.
Amended Ch. 831, Stats. 1970. Effective Nov. 23, 1970.
Amended Ch. 169, Stats. 1971. Operative May 3, 1972.
Amended Ch. 651, Stats. 1975. Effective January 1, 1976. Superseding Ch. 132.
Amended Ch. 48, Stats. 1976. Effective March 17, 1976, by terms of an urgency clause.

### *Computation of Allowable Gross Weight*

35551. (a) ( ) Except as otherwise provided in this section or Section 35551.5, the total gross weight in pounds imposed on the highway by any group of two or more consecutive axles shall not exceed that given for the respective distance in the following table:

| Distance in feet between the extremes of any group of 2 or more consecutive axles | 2 axles | 3 axles | 4 axles | 5 axles | 6 axles |
|---|---|---|---|---|---|
| 4 | 34,000 | 34,000 | 34,000 | 34,000 | 34,000 |
| 5 | 34,000 | 34,000 | 34,000 | 34,000 | 34,000 |
| 6 | 34,000 | 34,000 | 34,000 | 34,000 | 34,000 |
| 7 | 34,000 | 34,000 | 34,000 | 34,000 | 34,000 |
| 8 | 34,000 | 34,000 | 34,000 | 34,000 | 34,000 |
| 9 | 39,000 | 42,500 | 42,500 | 42,500 | 42,500 |
| 10 | 40,000 | 43,500 | 43,500 | 43,500 | 43,500 |
| 11 | 40,000 | 44,000 | 44,000 | 44,000 | 44,000 |
| 12 | 40,000 | 45,000 | 50,000 | 50,000 | 50,000 |
| 13 | 40,000 | 45,500 | 50,500 | 50,500 | 50,500 |
| 14 | 40,000 | 46,500 | 51,500 | 51,500 | 51,500 |
| 15 | 40,000 | 47,000 | 52,000 | 52,000 | 52,000 |
| 16 | 40,000 | 48,000 | 52,500 | 52,500 | 52,500 |
| 17 | 40,000 | 48,500 | 53,500 | 53,500 | 53,500 |
| 18 | 40,000 | 49,500 | 54,000 | 54,000 | 54,000 |
| 19 | 40,000 | 50,000 | 54,500 | 54,500 | 54,500 |
| 20 | 40,000 | 51,000 | 55,500 | 55,500 | 55,500 |
| 21 | 40,000 | 51,500 | 56,000 | 56,000 | 56,000 |
| 22 | 40,000 | 52,500 | 56,500 | 56,500 | 56,500 |
| 23 | 40,000 | 53,000 | 57,500 | 57,500 | 57,500 |
| 24 | 40,000 | 54,000 | 58,000 | 58,000 | 58,000 |
| 25 | 40,000 | 54,500 | 58,500 | 58,500 | 58,500 |
| 26 | 40,000 | 55,500 | 59,500 | 59,500 | 59,500 |
| 27 | 40,000 | 56,000 | 60,000 | 60,000 | 60,000 |
| 28 | 40,000 | 57,000 | 60,500 | 60,500 | 60,500 |
| 29 | 40,000 | 57,500 | 61,500 | 61,500 | 61,500 |
| 30 | 40,000 | 58,500 | 62,000 | 62,000 | 62,000 |
| 31 | 40,000 | 59,000 | 62,500 | 62,500 | 62,500 |
| 32 | 40,000 | 60,000 | 63,500 | 63,500 | 63,500 |
| 33 | 40,000 | 60,000 | 64,000 | 64,000 | 64,000 |
| 34 | 40,000 | 60,000 | 64,500 | 64,500 | 64,500 |
| 35 | 40,000 | 60,000 | 65,500 | 65,500 | 65,500 |
| 36 | 40,000 | 60,000 | 66,000 | 66,000 | 66,000 |
| 37 | 40,000 | 60,000 | 66,500 | 66,500 | 66,500 |
| 38 | 40,000 | 60,000 | 67,500 | 67,500 | 67,500 |
| 39 | 40,000 | 60,000 | 68,000 | 68,000 | 68,000 |
| 40 | 40,000 | 60,000 | 68,500 | 70,000 | 70,000 |
| 41 | 40,000 | 60,000 | 69,500 | 72,000 | 72,000 |
| 42 | 40,000 | 60,000 | 70,000 | 73,280 | 73,280 |
| 43 | 40,000 | 60,000 | 70,500 | 73,280 | 73,280 |
| 44 | 40,000 | 60,000 | 71,500 | 73,280 | 73,280 |
| 45 | 40,000 | 60,000 | 72,000 | 76,000 | 80,000 |
| 46 | 40,000 | 60,000 | 72,500 | 76,500 | 80,000 |
| 47 | 40,000 | 60,000 | 73,500 | 77,500 | 80,000 |
| 48 | 40,000 | 60,000 | 74,000 | 78,000 | 80,000 |
| 49 | 40,000 | 60,000 | 74,500 | 78,500 | 80,000 |
| 50 | 40,000 | 60,000 | 75,500 | 79,000 | 80,000 |
| 51 | 40,000 | 60,000 | 76,000 | 80,000 | 80,000 |
| 52 | 40,000 | 60,000 | 76,500 | 80,000 | 80,000 |
| 53 | 40,000 | 60,000 | 77,500 | 80,000 | 80,000 |
| 54 | 40,000 | 60,000 | 78,000 | 80,000 | 80,000 |
| 55 | 40,000 | 60,000 | 78,500 | 80,000 | 80,000 |
| 56 | 40,000 | 60,000 | 79,500 | 80,000 | 80,000 |
| 57 | 40,000 | 60,000 | 80,000 | 80,000 | 80,000 |
| 58 | 40,000 | 60,000 | 80,000 | 80,000 | 80,000 |
| 59 | 40,000 | 60,000 | 80,000 | 80,000 | 80,000 |
| 60 | 40,000 | 60,000 | 80,000 | 80,000 | 80,000 |

(b) In addition to the weights specified in subdivision (a), two consecutive sets of tandem axles may carry a gross weight of 34,000 pounds each if the overall distance between the first and last axles of such consecutive sets of tandem axles is 36 feet or more. The gross weight of each set of tandem axles shall not exceed 34,000 pounds and the gross weight of the two consecutive sets of tandem axles shall not exceed 68,000 pounds.

(c) The distance between axles shall be measured to the nearest whole foot. When a fraction is exactly six inches, the next larger whole foot shall be used.

(d) Nothing contained in this section shall affect the right to prohibit the use of any highway or any bridge or other structure thereon in the manner and to the extent specified in Article 4 (commencing with Section 35700) and Article 5 (commencing with Section 35750) of this chapter.

(e) The gross weight limits expressed by this section and Section 35550 shall include all enforcement tolerances.

Amended Ch. 1625, Stats. 1961. Effective Sept. 15, 1961.
Amended Ch. 537, Stats. 1965. Effective Sept. 17, 1965.
Amended Ch. 394, Stats. 1970. Effective Nov. 23, 1970.
Repealed and Added Ch. 651, Stats. 1975. Effective January 1, 1976.
Amended Ch. 166, Stats. 1976. Effective May 11, 1976 by terms of an urgency clause.

FIGURE 3

ClibPDF - www.fastio.com

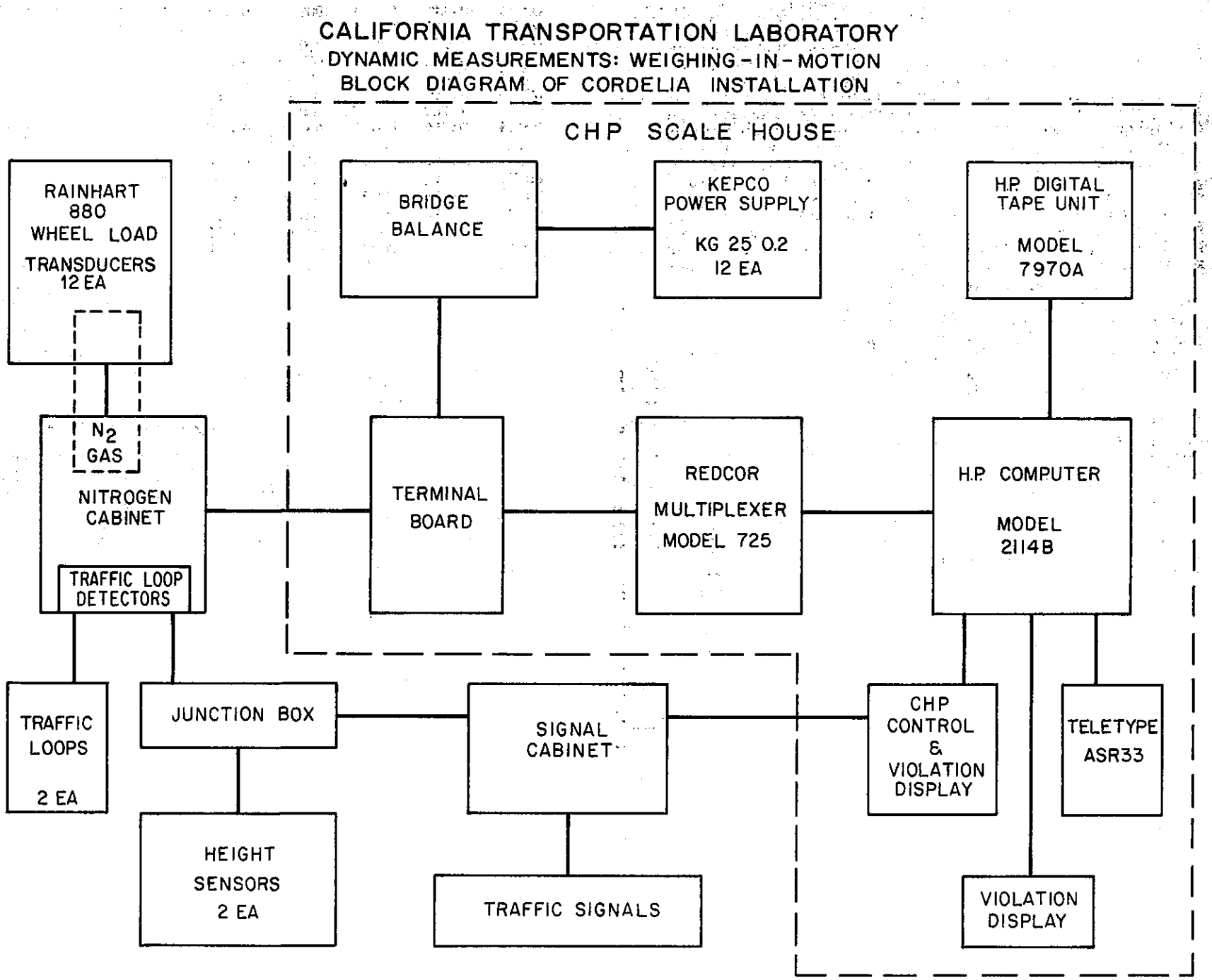


FIGURE 4

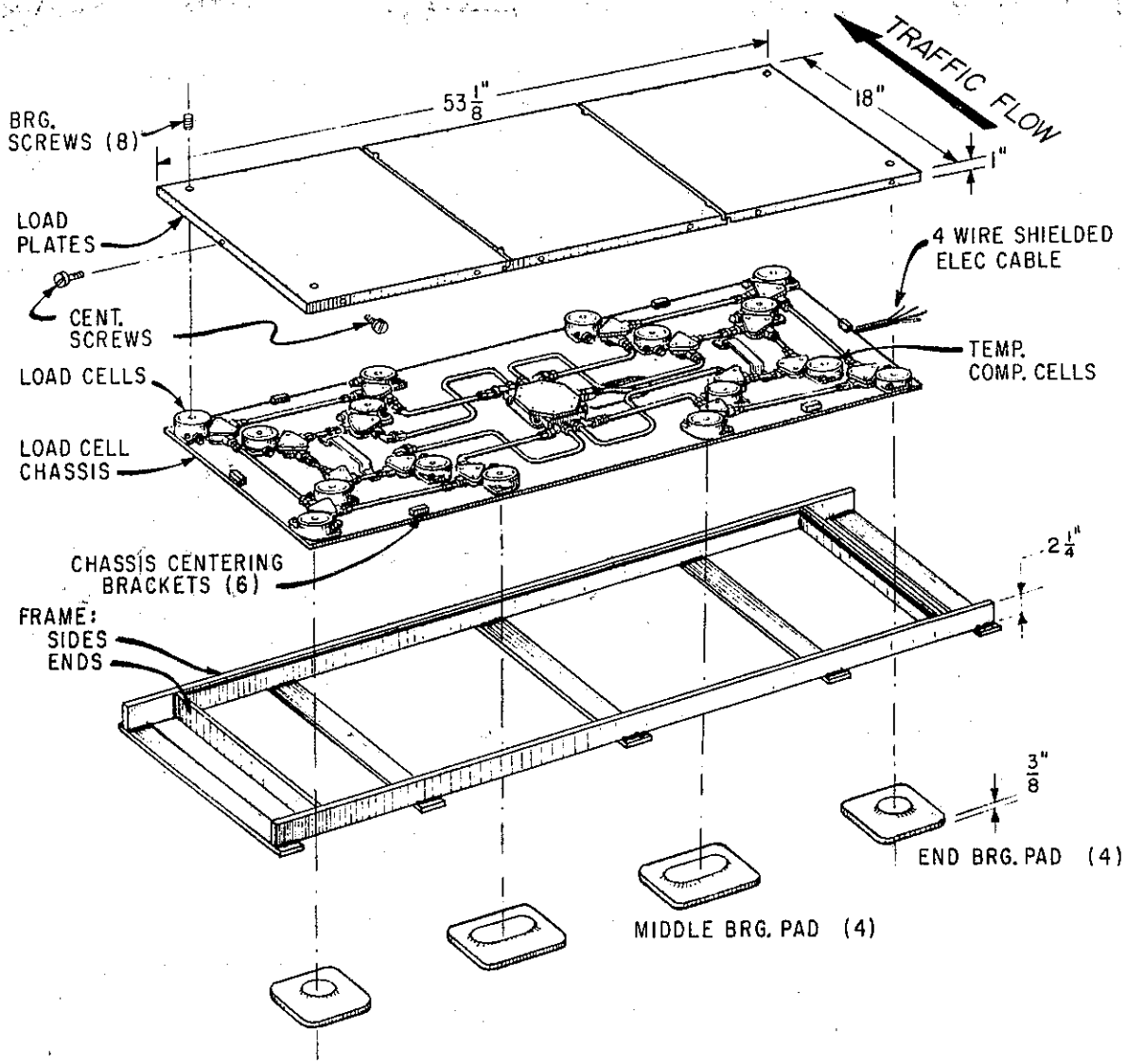


WHEEL LOAD TRANSDUCER ASSEMBLY

FIGURE 5



ClibPDF - www.fastio.com

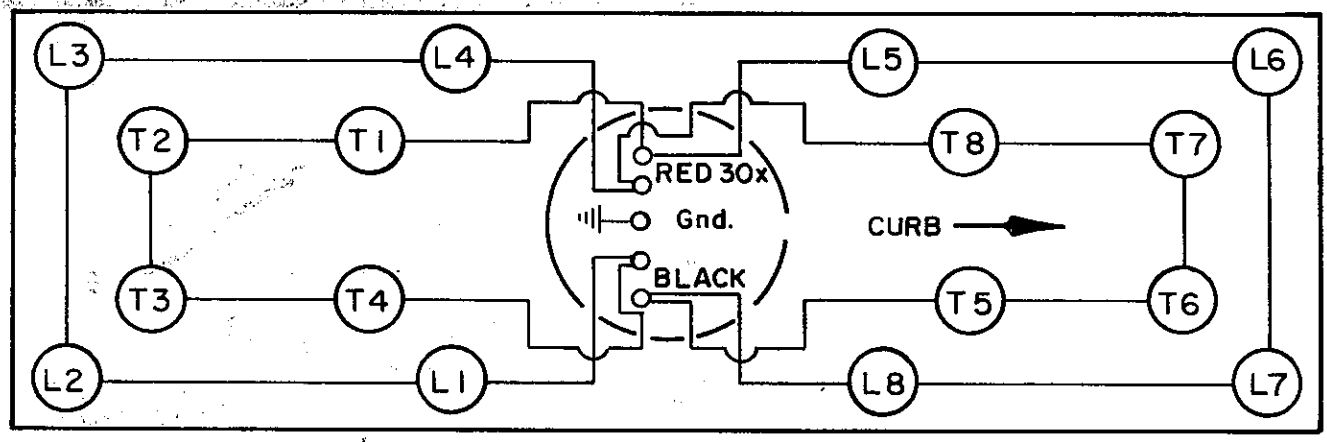


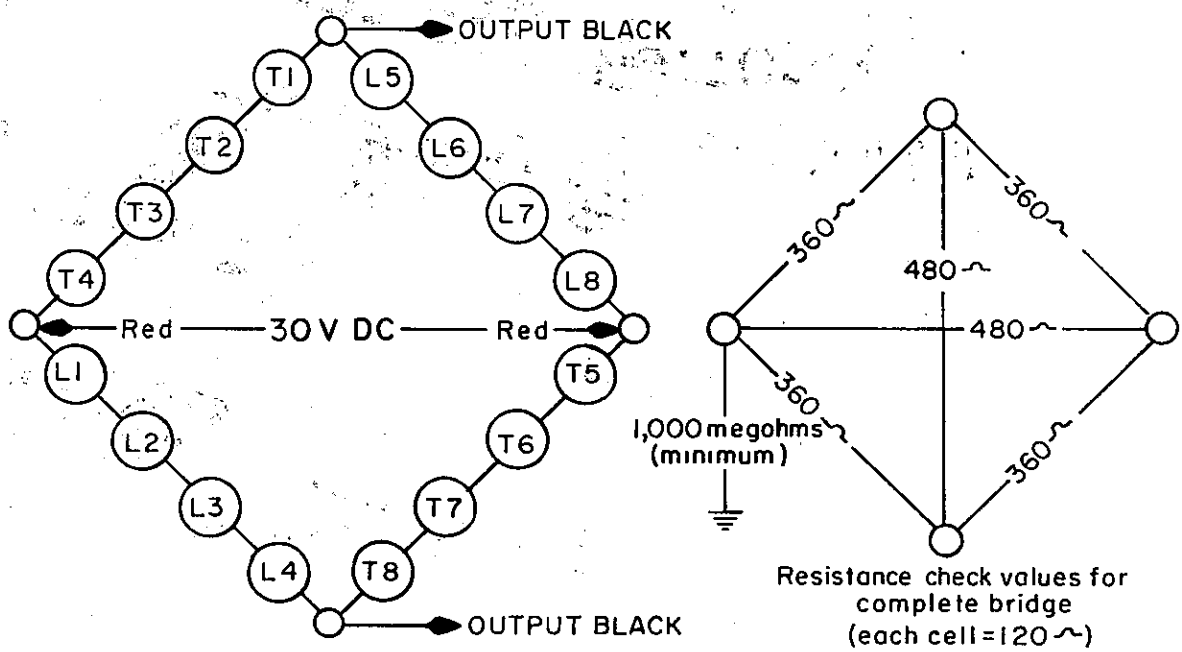


TRANSDUCER (LOAD CELL) CHASSIS SCHEMATIC

Figure 6



ClibPDF - www.fastio.com

| | | |
|---|---|---|
| | #001 | TRUCK NUMBER |
| AXLE WEIGHT X100# | 109 | AXLE SPACING (FEET) |
| | 14 | |
| | 152 | |
| | 04 | |
| | 164 | |
| | 29 | |
| | 152 | |
| | 04 | |
| | 163 | |
| | G= 740 | GROSS WEIGHT X100# |
| | L= 051 | TOTAL LENGTH (FEET) |
| | V= NONE | VIOLATION |

| | | |
|---|---|---|
| (ie) | NONE | NO VIOLATION |
| | AXLE 2 | AXLE 2 VIOLATION |
| | G 2-3 | AXLE GROUP 1 & 2 VIOLATION |
| | GROSS | TOTAL VEHICLE WEIGHT VIOLATION |
| | ABORT | TRUCK ABORTED COULD NOT READ |

TELETYPE PRINTER OUTPUT

FIGURE 7



ClibPDF - www.fastio.com

ClibPDF - www.fastio.com

# APPROXIMATE SPACING OF DYNAMIC WEIGHING TRANSDUCERS AT CORDELIA WEIGH STATION (Westbound I-80)

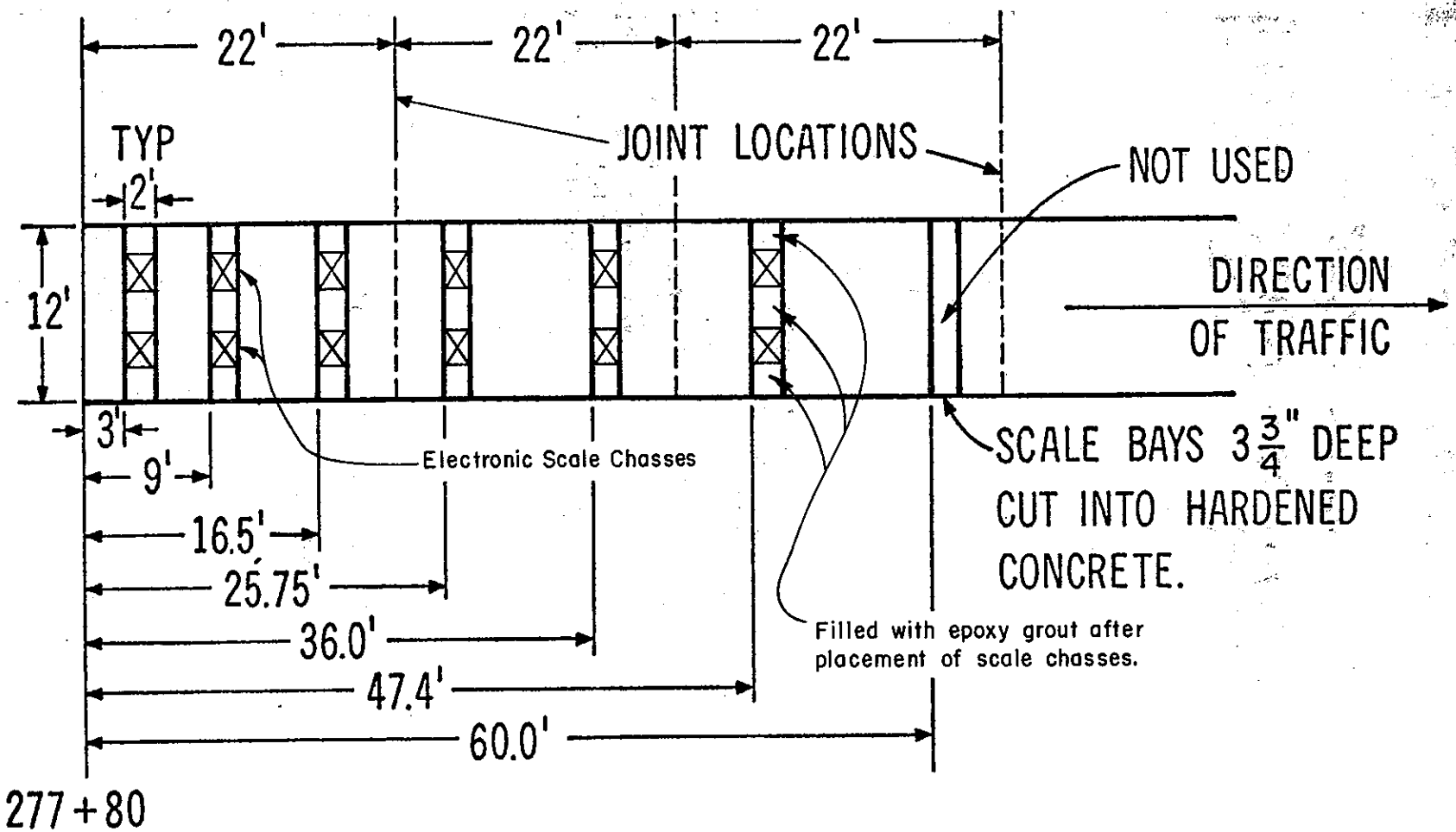


FIGURE 8

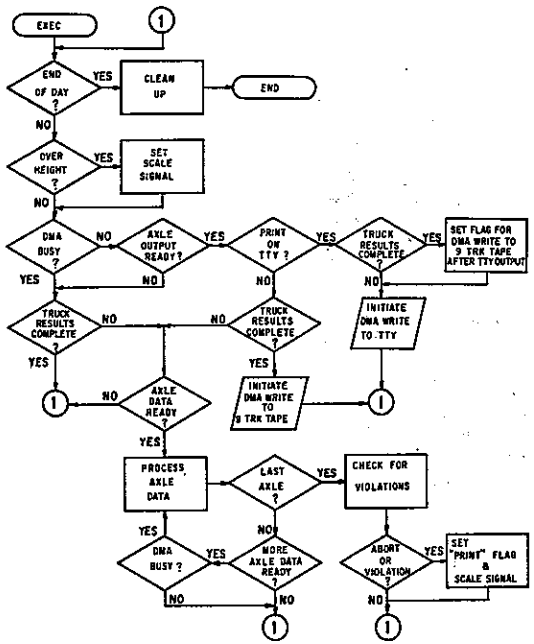


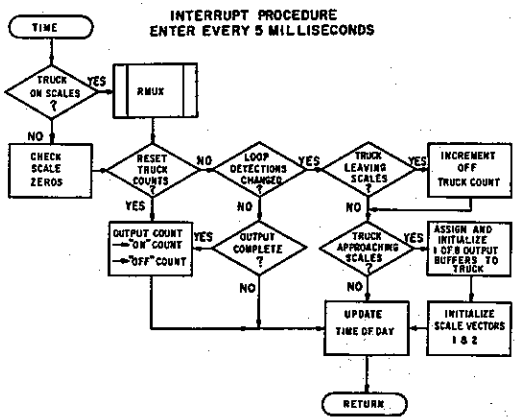


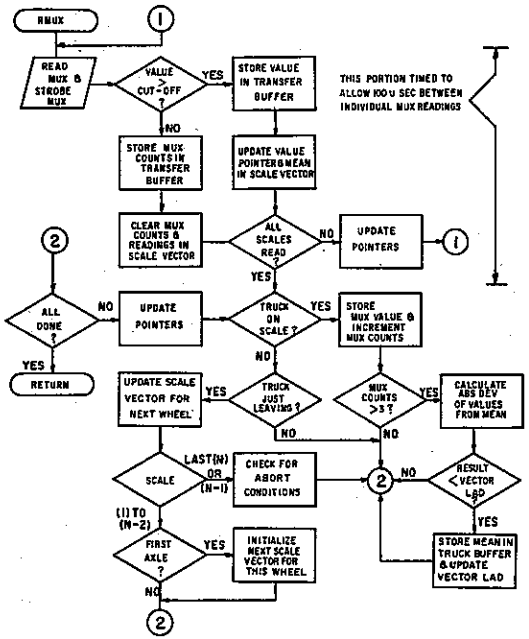


**CORDELIA WEIGH STATION**
**OPERATIONAL SYSTEM FLOW CHART**
Figure 9



ClibPDF - www.fastio.com

Figure 10

COMPLETE SCALE INSTALLATION WITH
DIRECTIONAL SIGNALS AND STATIC
SCALE HOUSE IN THE BACKGROUND



ClibPDF - www.fastio.com

Figure 11

STATIC CALIBRATION OF
DYNAMIC SCALES



ClibPDF - www.fastio.com

Figure 12

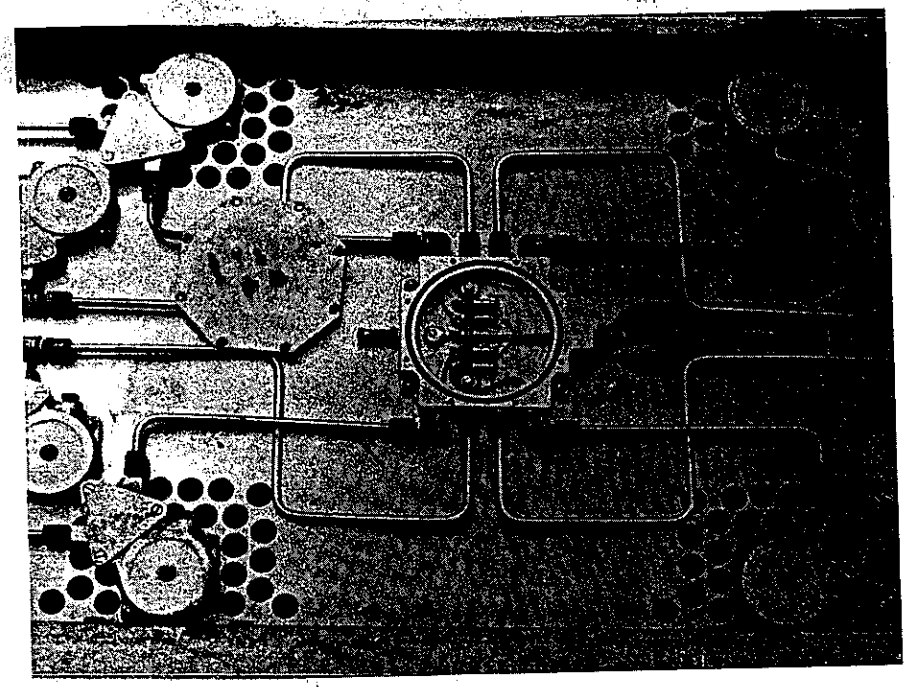

STRAIN GAGE LOAD CELL PLATE WITH SEALED ELECTRICAL CONNECTIONS IN THE CENTER. NOTE TUBING TO EACH CELL FOR NITROGEN MOISTURE SYSTEM



ClibPDF - www.fastio.com

Figure 13

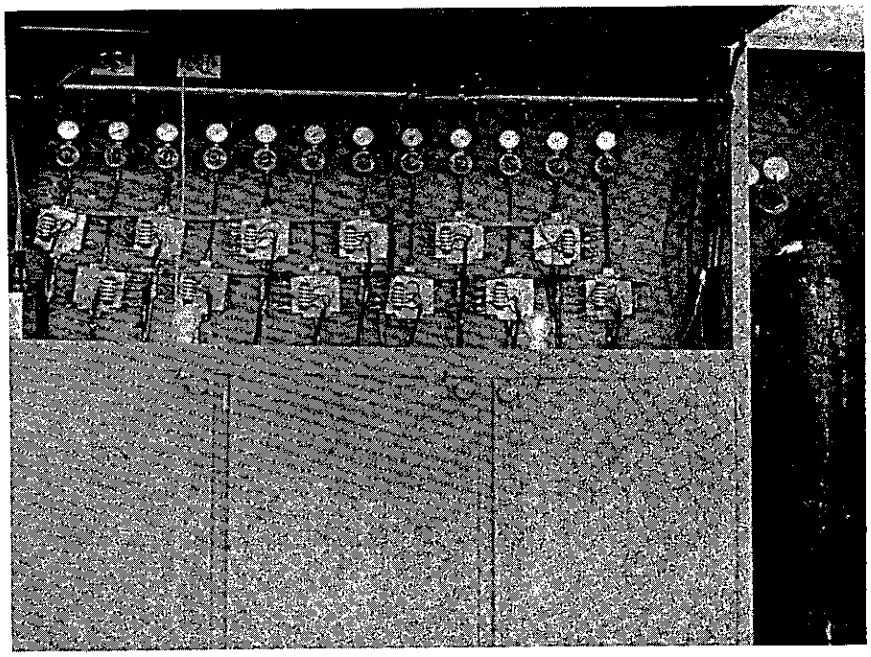

MAIN NITROGEN MANIFOLD
FEEDING EACH SCALE



ClibPDF - www.fastio.com

Figure 14

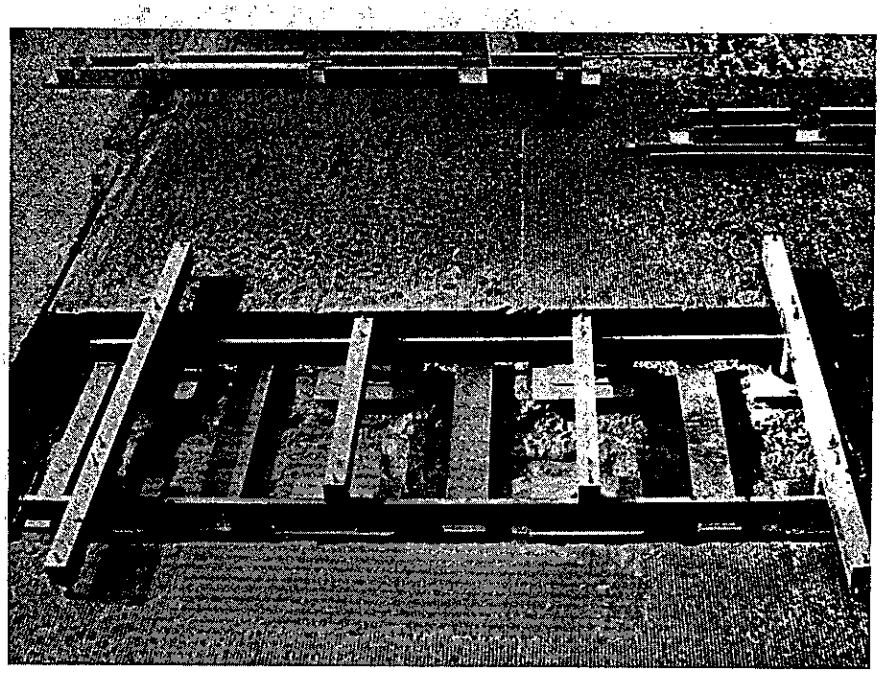

SCALE LEVELING FRAME
IN ROUGH SCALE PIT



ORIGINAL PAGE IS
OF POOR QUALITY

ClibPDF - www.fastio.com

Figure 15

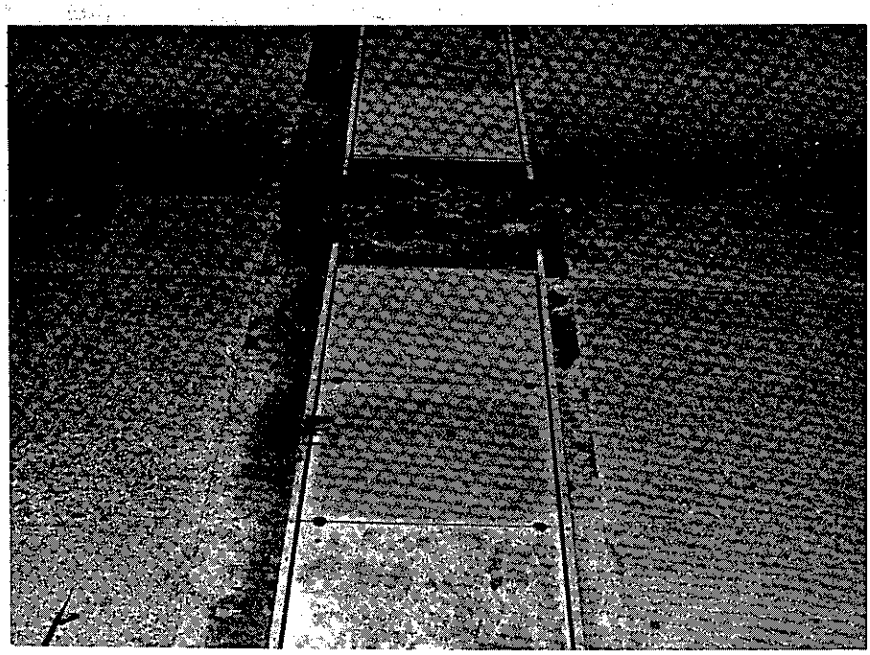

FINISHED SCALE PLATFORMS



ClibPDF - www.fastio.com

Figure 16

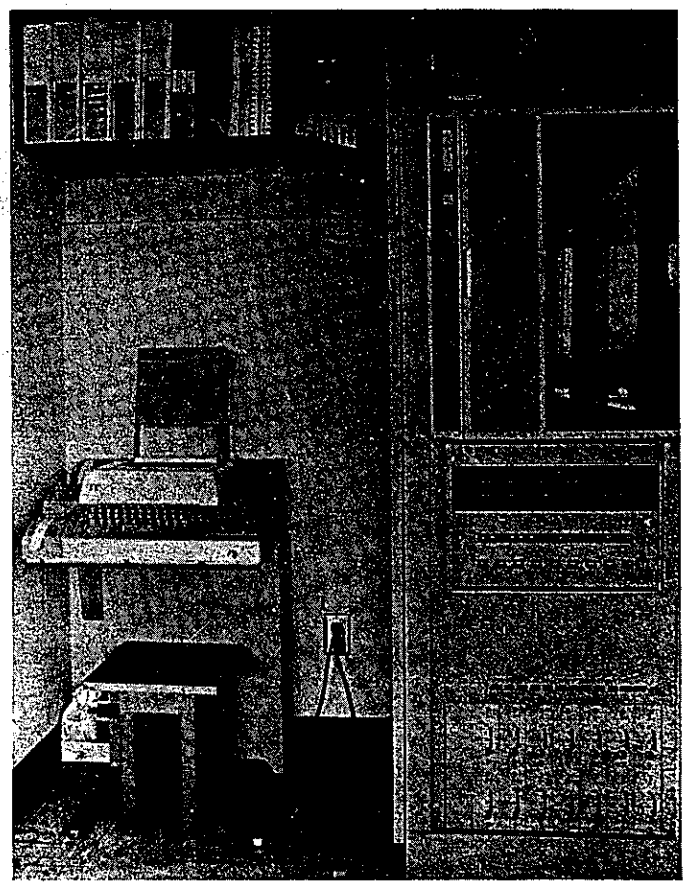

DYNAMIC WEIGHING COMPUTER CONTROL
SHOWING TELETYPE PRINTER AT RIGHT
AND MULTIPLEXER, TAPE DRIVE, COMPUTER
AND SCALE POWER SUPPLIES AT LEFT



ClibPDF - www.fastio.com

Figure 17

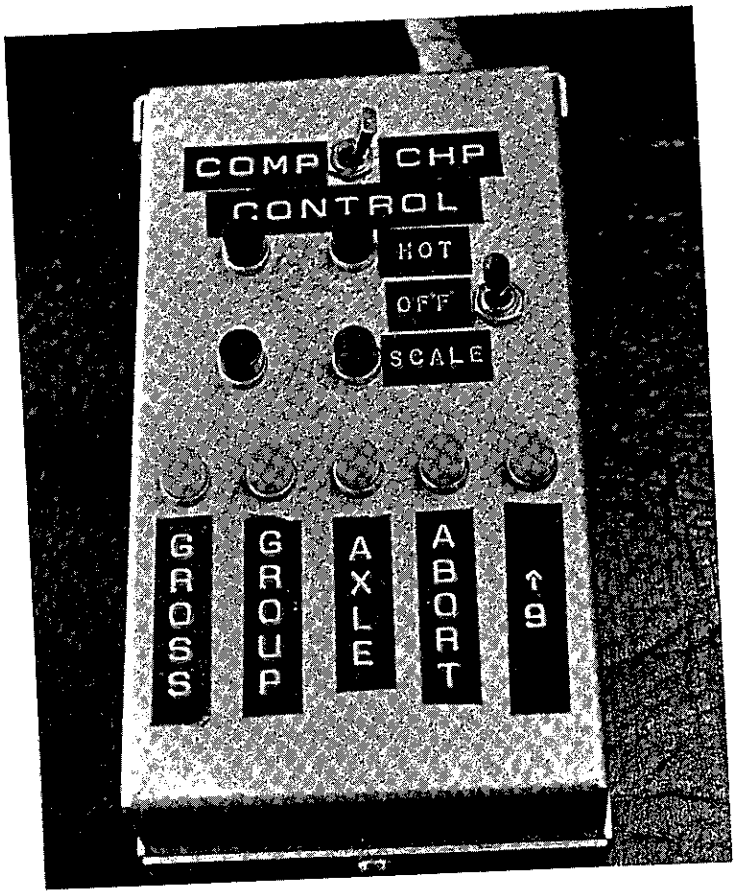


SCALEMASTER CONTROL BOX WITH MANUAL DIRECTIONAL SIGNAL SELECTION AND VIOLATION INDICATORS



ClibPDF - www.fastio.com

# APPENDIX



ClibPDF - www.fastio.com

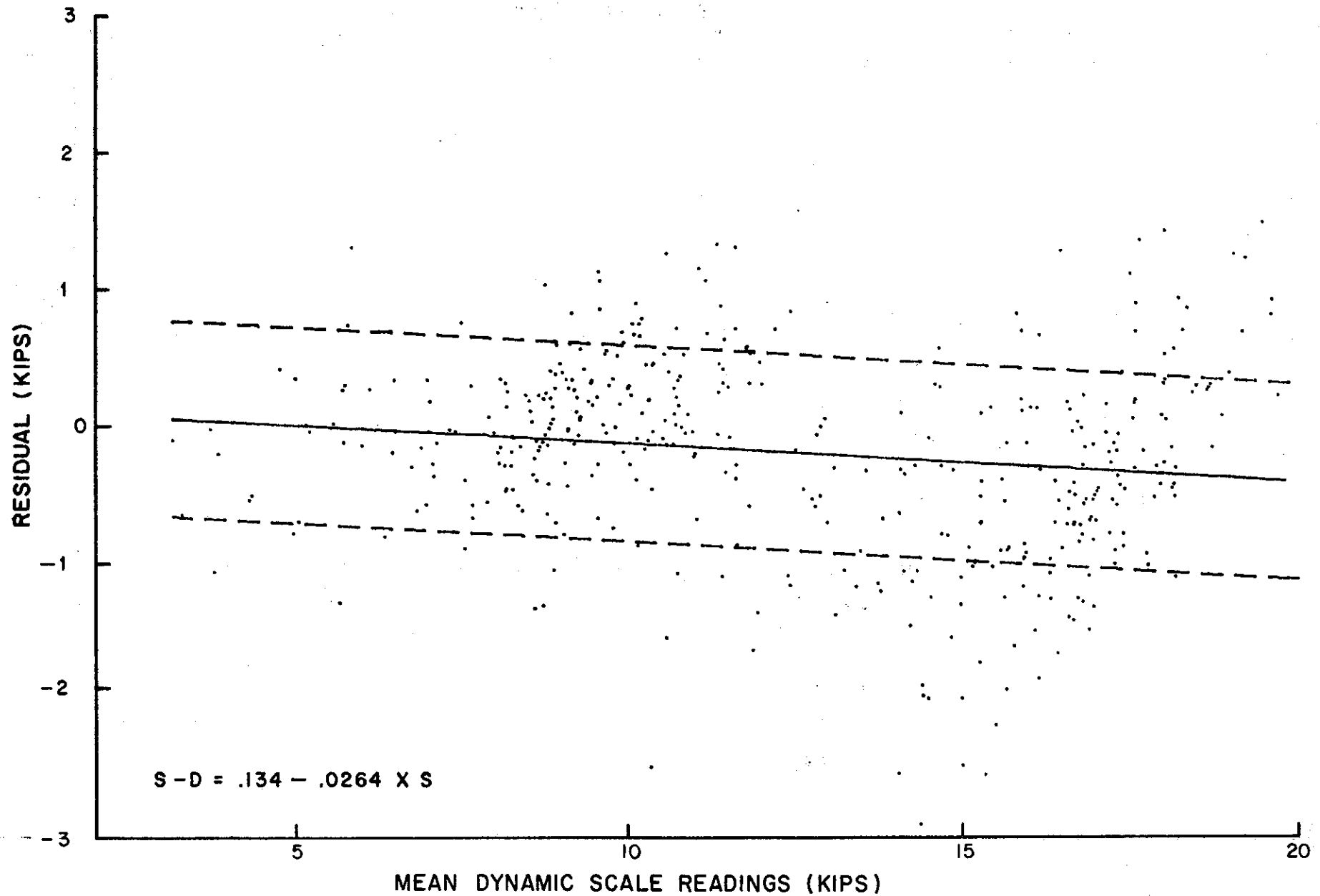


SINGLE AXLES

FIGURE A1



ClibPDF - www.fastio.com

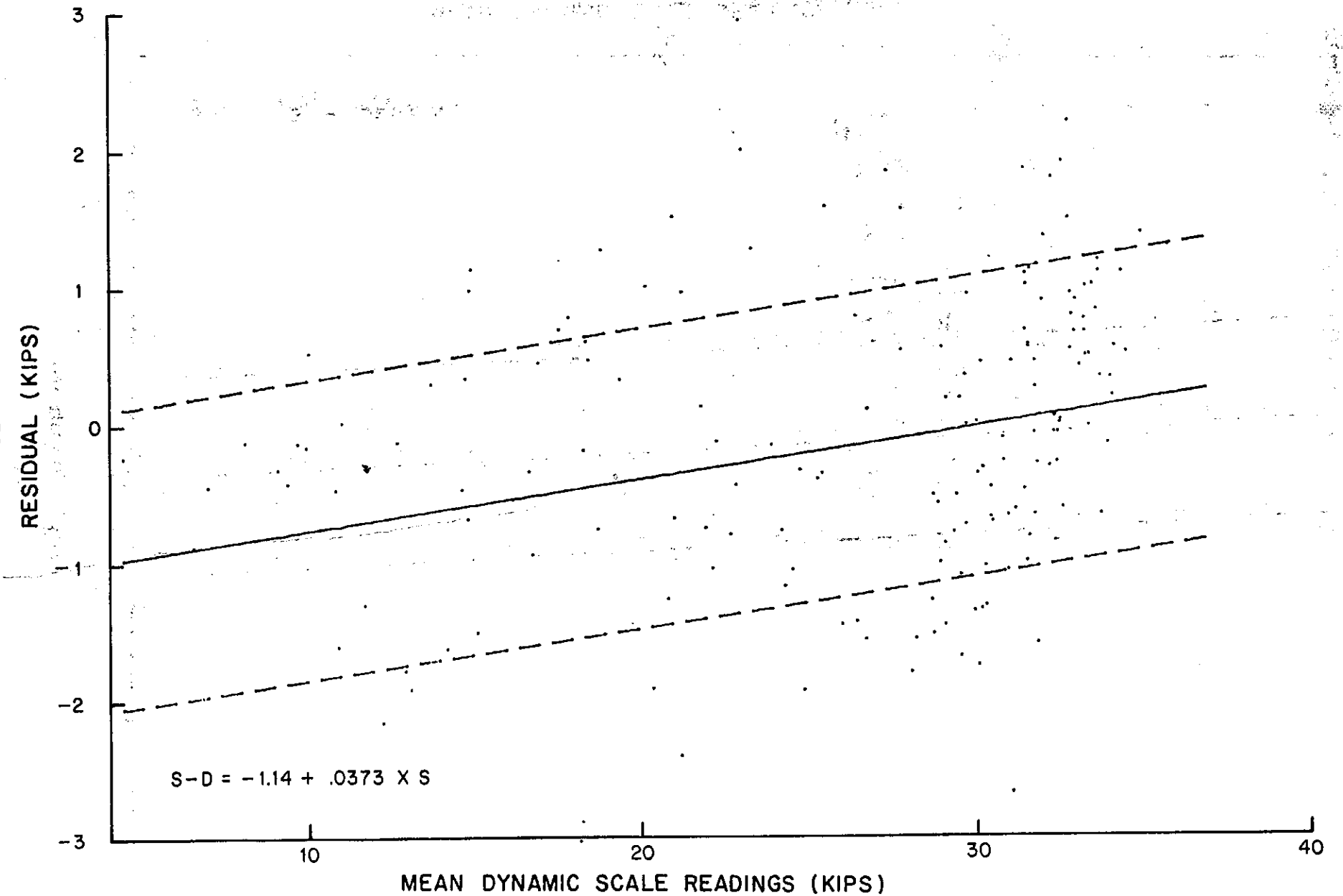


TANDEM AXLES

FIGURE A2



ClibPDF - www.fastio.com

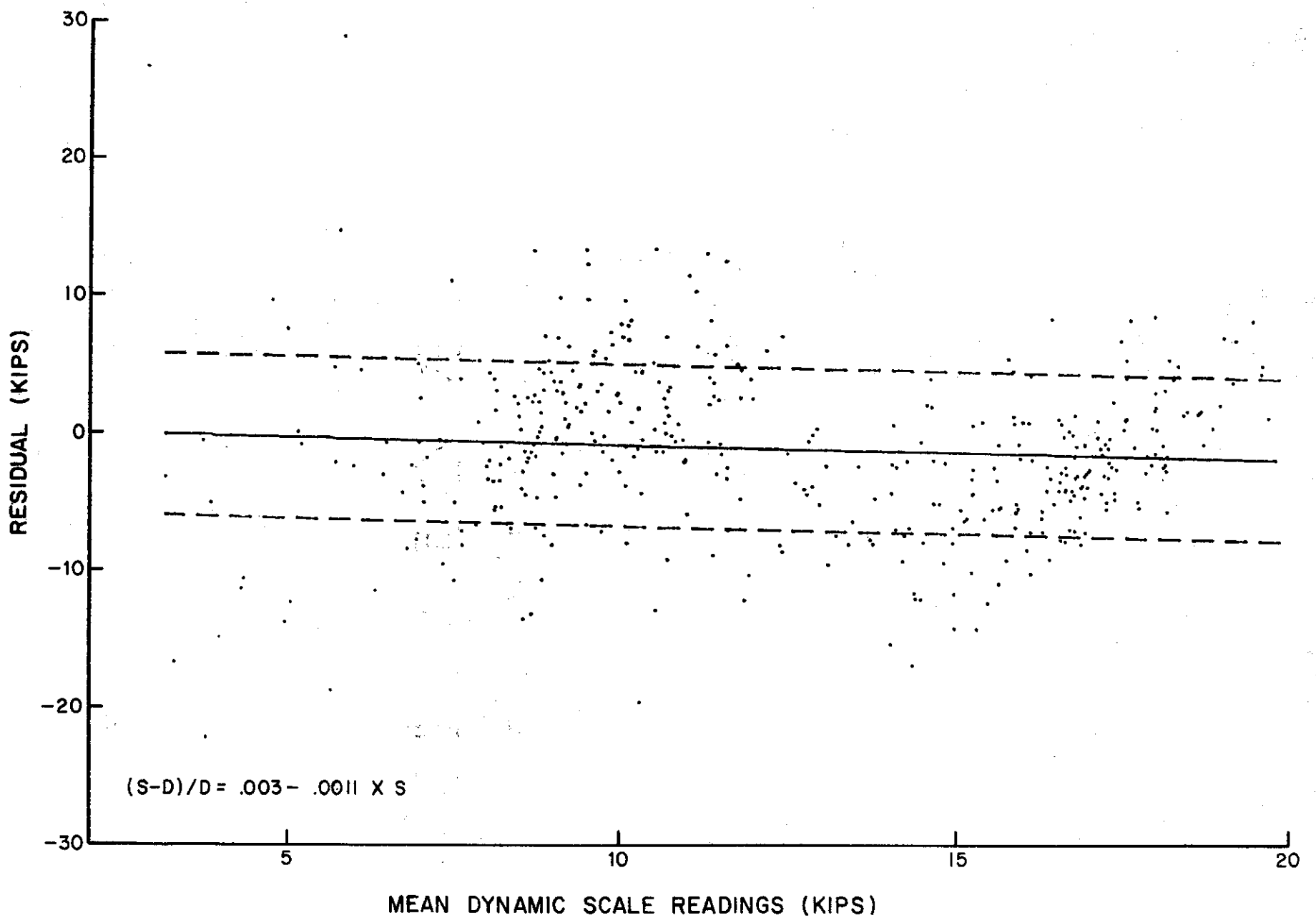


SINGLE AXLES

FIGURE A3



ClibPDF - www.fastio.com

NO. SCALES,SCALE NUMBERS?6 1 2 3 4 5 6

B0 = .3048E-2 B1 = -.111364E-2
XBAR = 12.4848 SSX = 7004.69
SYX = .592264E-1 MSE = .350776E-2

CRITICAL 20 KIP VALUES:

| PROB | SCALE | MEAN KIPS |
|---|---|---|
| P.100 = | 18.13 | 18.4462 |
| P.050 = | 17.71 | 18.0103 |
| P.010 = | 16.92 | 17.1915 |
| P.005 = | 16.63 | 16.8913 |
| P.001 = | 16.03 | 16.2709 |

FOR P.100:

| ACTUAL LEGAL | ACTUAL VIOL. | | CALCULATED LEGAL | CALCULATED VIOL. |
|---|---|---|---|---|
| 402 | 0 | PASS 402 | 399.9 | 2.1 |
| 27 | 0 | STOP 27 | 19.7 | 7.3 |
| 429 | 0 | TOTAL 429 | 419.6 | 9.4 |

FOR P.050:

| ACTUAL LEGAL | ACTUAL VIOL. | | CALCULATED LEGAL | CALCULATED VIOL. |
|---|---|---|---|---|
| 389 | 0 | PASS 389 | 387.9 | 1.1 |
| 40 | 0 | STOP 40 | 31.7 | 8.3 |
| 429 | 0 | TOTAL 429 | 419.6 | 9.4 |

FOR P.010:

| ACTUAL LEGAL | ACTUAL VIOL. | | CALCULATED LEGAL | CALCULATED VIOL. |
|---|---|---|---|---|
| 349 | 0 | PASS 349 | 348.8 | .2 |
| 80 | 0 | STOP 80 | 70.8 | 9.2 |
| 429 | 0 | TOTAL 429 | 419.6 | 9.4 |

FOR P.005:

| ACTUAL LEGAL | ACTUAL VIOL. | | CALCULATED LEGAL | CALCULATED VIOL. |
|---|---|---|---|---|
| 329 | 0 | PASS 329 | 328.9 | .1 |
| 100 | 0 | STOP 100 | 90.6 | 9.4 |
| 429 | 0 | TOTAL 429 | 419.6 | 9.4 |

FOR P.001:

| ACTUAL LEGAL | ACTUAL VIOL. | | CALCULATED LEGAL | CALCULATED VIOL. |
|---|---|---|---|---|
| 308 | 0 | PASS 308 | 308.0 | .0 |
| 121 | 0 | STOP 121 | 111.6 | 9.4 |
| 429 | 0 | TOTAL 429 | 419.6 | 9.4 |



ClibPDF - www.fastio.com

NO. SCALES,SCALE NUMBERS?5 2 3 4 5 6

| | | | |
|---|---|---|---|
| B0 | = -.375513E-2 | B1 | = -.53839E-3 |
| XBAR | = 12.4986 | SSX | = 7130.17 |
| SYX | = .590901E-1 | MSE | = .349164E-2 |

CRITICAL 20 KIP VALUES:

| PROB | SCALE | MEAN KIPS |
|---|---|---|
| P.100 = | 18.2 | 18.4501 |
| P.050 = | 17.78 | 18.0202 |
| P.010 = | 16.98 | 17.2019 |
| P.005 = | 16.69 | 16.9054 |
| P.001 = | 16.09 | 16.2923 |

FOR P.100:

| ACTUAL LEGAL | ACTUAL VIOL. | | CALCULATED LEGAL | CALCULATED VIOL. |
|---|---|---|---|---|
| 404 | 0 | PASS 404 | 401.8 | 2.2 |
| 25 | 0 | STOP 25 | 17.3 | 7.7 |
| 429 | 0 | TOTAL 429 | 419.1 | 9.9 |

FOR P.050:

| ACTUAL LEGAL | ACTUAL VIOL. | | CALCULATED LEGAL | CALCULATED VIOL. |
|---|---|---|---|---|
| 390 | 0 | PASS 390 | 388.8 | 1.2 |
| 39 | 0 | STOP 39 | 30.3 | 8.7 |
| 429 | 0 | TOTAL 429 | 419.1 | 9.9 |

FOR P.010:

| ACTUAL LEGAL | ACTUAL VIOL. | | CALCULATED LEGAL | CALCULATED VIOL. |
|---|---|---|---|---|
| 353 | 0 | PASS 353 | 352.7 | .3 |
| 76 | 0 | STOP 76 | 66.3 | 9.7 |
| 429 | 0 | TOTAL 429 | 419.1 | 9.9 |

FOR P.005:

| ACTUAL LEGAL | ACTUAL VIOL. | | CALCULATED LEGAL | CALCULATED VIOL. |
|---|---|---|---|---|
| 331 | 0 | PASS 331 | 330.9 | .1 |
| 98 | 0 | STOP 98 | 88.2 | 9.8 |
| 429 | 0 | TOTAL 429 | 419.1 | 9.9 |

FOR P.001:

| ACTUAL LEGAL | ACTUAL VIOL. | | CALCULATED LEGAL | CALCULATED VIOL. |
|---|---|---|---|---|
| 308 | 0 | PASS 308 | 308.0 | .0 |
| 121 | 0 | STOP 121 | 111.1 | 9.9 |
| 429 | 0 | TOTAL 429 | 419.1 | 9.9 |



ClibPDF - www.fastio.com

NO. SCALES,SCALE NUMBERS?4 2 3 4 6

| | | | |
|---|---|---|---|
| B0 | = -.123508E-1 | B1 | = -.423414E-3 |
| XBAR | = 12.4036 | SSX | = 6987.48 |
| SYX | = .624281E-1 | MSE | = .389727E-2 |

CRITICAL 20 KIP VALUES:

| PROB | SCALE | MEAN KIPS |
|---|---|---|
| P.100 = | 17.99 | 18.3565 |
| P.050 = | 17.54 | 17.8939 |
| P.010 = | 16.69 | 17.0205 |
| P.005 = | 16.39 | 16.7124 |
| P.001 = | 15.75 | 16.0554 |

FOR P.100:

| ACTUAL LEGAL | ACTUAL VIOL. | | CALCULATED LEGAL | CALCULATED VIOL. |
|---|---|---|---|---|
| 398 | 0 | PASS 398 | 396.2 | 1.8 |
| 31 | 0 | STOP 31 | 21.3 | 9.7 |
| 429 | 0 | TOTAL 429 | 417.4 | 11.6 |

FOR P.050:

| ACTUAL LEGAL | ACTUAL VIOL. | | CALCULATED LEGAL | CALCULATED VIOL. |
|---|---|---|---|---|
| 387 | 0 | PASS 387 | 385.9 | 1.1 |
| 42 | 0 | STOP 42 | 31.5 | 10.5 |
| 429 | 0 | TOTAL 429 | 417.4 | 11.6 |

FOR P.010:

| ACTUAL LEGAL | ACTUAL VIOL. | | CALCULATED LEGAL | CALCULATED VIOL. |
|---|---|---|---|---|
| 348 | 0 | PASS 348 | 347.8 | .2 |
| 81 | 0 | STOP 81 | 69.6 | 11.4 |
| 429 | 0 | TOTAL 429 | 417.4 | 11.6 |

FOR P.005:

| ACTUAL LEGAL | ACTUAL VIOL. | | CALCULATED LEGAL | CALCULATED VIOL. |
|---|---|---|---|---|
| 328 | 0 | PASS 328 | 327.9 | .1 |
| 101 | 0 | STOP 101 | 89.5 | 11.5 |
| 429 | 0 | TOTAL 429 | 417.4 | 11.6 |

FOR P.001:

| ACTUAL LEGAL | ACTUAL VIOL. | | CALCULATED LEGAL | CALCULATED VIOL. |
|---|---|---|---|---|
| 302 | 0 | PASS 302 | 302.0 | .0 |
| 127 | 0 | STOP 127 | 115.4 | 11.6 |
| 429 | 0 | TOTAL 429 | 417.4 | 11.6 |



ClibPDF - www.fastio.com

NO. SCALES,SCALE NUMBERS?3 2 4 6

B0 = -.250227E-2 B1 = -.252121E-3
XBAR = 12.5509 SSX = 7187.24
SYX = .674637E-1 MSE = .455135E-2

CRITICAL 20 KIP VALUES:

| PROB | SCALE | MEAN KIPS |
|---|---|---|
| P.100 = | 18.12 | 18.249 |
| P.050 = | 17.63 | 17.7533 |
| P.010 = | 16.71 | 16.823 |
| P.005 = | 16.38 | 16.4894 |
| P.001 = | 15.69 | 15.792 |

FOR P.100:

| ACTUAL LEGAL | ACTUAL VIOL. | | | CALCULATED LEGAL | CALCULATED VIOL. |
|---|---|---|---|---|---|
| 394 | 0 | PASS | 394 | 391.5 | 2.5 |
| 35 | 0 | STOP | 35 | 24.9 | 10.1 |
| 429 | 0 | TOTAL | 429 | 416.3 | 12.7 |

FOR P.050:

| ACTUAL LEGAL | ACTUAL VIOL. | | | CALCULATED LEGAL | CALCULATED VIOL. |
|---|---|---|---|---|---|
| 375 | 0 | PASS | 375 | 373.9 | 1.1 |
| 54 | 0 | STOP | 54 | 42.5 | 11.5 |
| 429 | 0 | TOTAL | 429 | 416.3 | 12.7 |

FOR P.010:

| ACTUAL LEGAL | ACTUAL VIOL. | | | CALCULATED LEGAL | CALCULATED VIOL. |
|---|---|---|---|---|---|
| 337 | 0 | PASS | 337 | 336.8 | .2 |
| 92 | 0 | STOP | 92 | 79.5 | 12.5 |
| 429 | 0 | TOTAL | 429 | 416.3 | 12.7 |

FOR P.005:

| ACTUAL LEGAL | ACTUAL VIOL. | | | CALCULATED LEGAL | CALCULATED VIOL. |
|---|---|---|---|---|---|
| 318 | 0 | PASS | 318 | 317.9 | .1 |
| 111 | 0 | STOP | 111 | 98.4 | 12.6 |
| 429 | 0 | TOTAL | 429 | 416.3 | 12.7 |

FOR P.001:

| ACTUAL LEGAL | ACTUAL VIOL. | | | CALCULATED LEGAL | CALCULATED VIOL. |
|---|---|---|---|---|---|
| 293 | 0 | PASS | 293 | 293.0 | .0 |
| 136 | 0 | STOP | 136 | 123.4 | 12.6 |
| 429 | 0 | TOTAL | 429 | 416.3 | 12.7 |



ClibPDF - www.fastio.com

NO. SCALES,SCALE NUMBERS?2 2 6

| | | | |
|---|---|---|---|
| B0 | = .161995E-1 | B1 | = .266508E-4 |
| XBAR | = 12.8241 | SSX | = 7488.69 |
| SYX | = .767111E-1 | MSE | = .588459E-2 |

CRITICAL 20 KIP VALUES:

| PROB | SCALE | MEAN KIPS |
|---|---|---|
| P.100 = | 18.36 | 18.0586 |
| P.050 = | 17.8 | 17.5081 |
| P.010 = | 16.75 | 16.4757 |
| P.005 = | 16.37 | 16.1021 |
| P.001 = | 15.58 | 15.3254 |

FOR P.100:

| ACTUAL LEGAL | ACTUAL VIOL. | | | CALCULATED LEGAL | CALCULATED VIOL. |
|---|---|---|---|---|---|
| 387 | 0 | PASS | 387 | 384.3 | 2.7 |
| 42 | 0 | STOP | 42 | 30.6 | 11.4 |
| 429 | 0 | TOTAL | 429 | 414.9 | 14.1 |

FOR P.050:

| ACTUAL LEGAL | ACTUAL VIOL. | | | CALCULATED LEGAL | CALCULATED VIOL. |
|---|---|---|---|---|---|
| 367 | 0 | PASS | 367 | 365.7 | 1.3 |
| 62 | 0 | STOP | 62 | 49.3 | 12.7 |
| 429 | 0 | TOTAL | 429 | 414.9 | 14.1 |

FOR P.010:

| ACTUAL LEGAL | ACTUAL VIOL. | | | CALCULATED LEGAL | CALCULATED VIOL. |
|---|---|---|---|---|---|
| 322 | 0 | PASS | 322 | 321.8 | .2 |
| 107 | 0 | STOP | 107 | 93.1 | 13.9 |
| 429 | 0 | TOTAL | 429 | 414.9 | 14.1 |

FOR P.005:

| ACTUAL LEGAL | ACTUAL VIOL. | | | CALCULATED LEGAL | CALCULATED VIOL. |
|---|---|---|---|---|---|
| 308 | 0 | PASS | 308 | 307.9 | .1 |
| 121 | 0 | STOP | 121 | 107.0 | 14.0 |
| 429 | 0 | TOTAL | 429 | 414.9 | 14.1 |

FOR P.001:

| ACTUAL LEGAL | ACTUAL VIOL. | | | CALCULATED LEGAL | CALCULATED VIOL. |
|---|---|---|---|---|---|
| 287 | 0 | PASS | 287 | 287.0 | .0 |
| 142 | 0 | STOP | 142 | 128.0 | 14.0 |
| 429 | 0 | TOTAL | 429 | 414.9 | 14.1 |



ClibPDF - www.fastio.com

NO. SCALES,SCALE NUMBERS?6 1 2 3 4 5 6

| | | | |
|---|---|---|---|
| B0 | = -1.14303 | B1 | = .373168E-1 |
| XBAR | = 25.9463 | SSX | = 10605.7 |
| SYX | = 1.08706 | MSE | = 1.18169 |

CRITICAL 34 KIP VALUES:

| PROB | SCALE | MEAN KIPS |
|---|---|---|
| P.100 = | 32.67 | 32.5939 |
| P.050 = | 32.26 | 32.1992 |
| P.010 = | 31.49 | 31.4579 |
| P.005 = | 31.2 | 31.1787 |
| P.001 = | 30.62 | 30.6204 |

FOR P.100:

| ACTUAL LEGAL | ACTUAL VIOL. | | | CALCULATED LEGAL | CALCULATED VIOL. |
|---|---|---|---|---|---|
| 140 | 0 | PASS | 140 | 138.9 | 1.1 |
| 25 | 6 | STOP | 31 | 19.7 | 11.3 |
| 165 | 6 | TOTAL | 171 | 158.6 | 12.4 |

FOR P.050:

| ACTUAL LEGAL | ACTUAL VIOL. | | | CALCULATED LEGAL | CALCULATED VIOL. |
|---|---|---|---|---|---|
| 130 | 0 | PASS | 130 | 129.6 | .4 |
| 35 | 6 | STOP | 41 | 29.0 | 12.0 |
| 165 | 6 | TOTAL | 171 | 158.6 | 12.4 |

FOR P.010:

| ACTUAL LEGAL | ACTUAL VIOL. | | | CALCULATED LEGAL | CALCULATED VIOL. |
|---|---|---|---|---|---|
| 112 | 0 | PASS | 112 | 112.0 | .0 |
| 53 | 6 | STOP | 59 | 46.6 | 12.4 |
| 165 | 6 | TOTAL | 171 | 158.6 | 12.4 |

FOR P.005:

| ACTUAL LEGAL | ACTUAL VIOL. | | | CALCULATED LEGAL | CALCULATED VIOL. |
|---|---|---|---|---|---|
| 111 | 0 | PASS | 111 | 111.0 | .0 |
| 54 | 6 | STOP | 60 | 47.6 | 12.4 |
| 165 | 6 | TOTAL | 171 | 158.6 | 12.4 |

FOR P.001:

| ACTUAL LEGAL | ACTUAL VIOL. | | | CALCULATED LEGAL | CALCULATED VIOL. |
|---|---|---|---|---|---|
| 105 | 0 | PASS | 105 | 105.0 | .0 |
| 60 | 6 | STOP | 66 | 53.6 | 12.4 |
| 165 | 6 | TOTAL | 171 | 158.6 | 12.4 |



ClibPDF - www.fastio.com

```
NO. SCALES,SCALE NUMBERS?5 2 3 4 5 6

B0   = -1.05758          B1   = .30879E-1
XBAR = 25.8621           SSX  = 10476.7
SYX  = 1.05753           MSE  = 1.11837

CRITICAL 34 KIP VALUES:
PROB          SCALE        MEAN KIPS

P.100 =       32.58        32.6315
P.050 =       32.18        32.2439
P.010 =       31.44        31.5267
P.005 =       31.16        31.2554
P.001 =       30.6         30.7127

FOR P.100:

      ACTUAL                          CALCULATED
   LEGAL  VIOL.                     LEGAL  VIOL.

     141      0     PASS 141      139.9    1.1
      24      6     STOP  30       18.6   11.4
     165      6    TOTAL 171      158.5   12.5

FOR P.050:

      ACTUAL                          CALCULATED
   LEGAL  VIOL.                     LEGAL  VIOL.

     131      0     PASS 131      130.6     .4
      34      6     STOP  40       27.9   12.1
     165      6    TOTAL 171      158.5   12.5

FOR P.010:

      ACTUAL                          CALCULATED
   LEGAL  VIOL.                     LEGAL  VIOL.

     116      0     PASS 116      115.9     .1
      49      6     STOP  55       42.5   12.5
     165      6    TOTAL 171      158.5   12.5

FOR P.005:

      ACTUAL                          CALCULATED
   LEGAL  VIOL.                     LEGAL  VIOL.

     111      0     PASS 111      111.0     .0
      54      6     STOP  60       47.5   12.5
     165      6    TOTAL 171      158.5   12.5

FOR P.001:

      ACTUAL                          CALCULATED
   LEGAL  VIOL.                     LEGAL  VIOL.

     106      0     PASS 106      106.0     .0
      59      6     STOP  65       52.5   12.5
     165      6    TOTAL 171      158.5   12.5
```



ClibPDF - www.fastio.com

NO. SCALES,SCALE NUMBERS?4 2 3 4 6

| | | | |
|---|---|---|---|
| B0 | = -.993917 | B1 | = .209387E-1 |
| XBAR | = 25.6645 | SSX | = 10266.5 |
| SYX | = 1.05349 | MSE | = 1.10983 |

CRITICAL 34 KIP VALUES:

| PROB | SCALE | MEAN KIPS |
|---|---|---|
| P.100 = | 32.32 | 32.6372 |
| P.050 = | 31.93 | 32.2553 |
| P.010 = | 31.19 | 31.5308 |
| P.005 = | 30.92 | 31.2665 |
| P.001 = | 30.37 | 30.728 |

FOR P.100:

| ACTUAL LEGAL | ACTUAL VIOL. | | | CALCULATED LEGAL | CALCULATED VIOL. |
|---|---|---|---|---|---|
| 141 | 0 | PASS | 141 | 140.0 | 1.0 |
| 24 | 6 | STOP | 30 | 19.1 | 10.9 |
| 165 | 6 | TOTAL | 171 | 159.1 | 11.9 |

FOR P.050:

| ACTUAL LEGAL | ACTUAL VIOL. | | | CALCULATED LEGAL | CALCULATED VIOL. |
|---|---|---|---|---|---|
| 133 | 0 | PASS | 133 | 132.5 | .5 |
| 32 | 6 | STOP | 38 | 26.6 | 11.4 |
| 165 | 6 | TOTAL | 171 | 159.1 | 11.9 |

FOR P.010:

| ACTUAL LEGAL | ACTUAL VIOL. | | | CALCULATED LEGAL | CALCULATED VIOL. |
|---|---|---|---|---|---|
| 115 | 0 | PASS | 115 | 114.9 | .1 |
| 50 | 6 | STOP | 56 | 44.2 | 11.8 |
| 165 | 6 | TOTAL | 171 | 159.1 | 11.9 |

FOR P.005:

| ACTUAL LEGAL | ACTUAL VIOL. | | | CALCULATED LEGAL | CALCULATED VIOL. |
|---|---|---|---|---|---|
| 109 | 0 | PASS | 109 | 109.0 | .0 |
| 56 | 6 | STOP | 62 | 50.1 | 11.9 |
| 165 | 6 | TOTAL | 171 | 159.1 | 11.9 |

FOR P.001:

| ACTUAL LEGAL | ACTUAL VIOL. | | | CALCULATED LEGAL | CALCULATED VIOL. |
|---|---|---|---|---|---|
| 106 | 0 | PASS | 106 | 106.0 | .0 |
| 59 | 6 | STOP | 65 | 53.1 | 11.9 |
| 165 | 6 | TOTAL | 171 | 159.1 | 11.9 |



ClibPDF - www.fastio.com

NO. SCALES,SCALE NUMBERS?3 2 4 6

| | | | |
|---|---|---|---|
| B0 | = -.989566 | B1 | = .265321E-1 |
| XBAR | = 25.8165 | SSX | = 10351.5 |
| SYX | = 1.13869 | MSE | = 1.29662 |

CRITICAL 34 KIP VALUES:

| PROB | SCALE | MEAN KIPS |
|---|---|---|
| P.100 = | 32.4 | 32.5299 |
| P.050 = | 31.97 | 32.1113 |
| P.010 = | 31.17 | 31.3326 |
| P.005 = | 30.88 | 31.0503 |
| P.001 = | 30.28 | 30.4662 |

FOR P.100:

| ACTUAL LEGAL | ACTUAL VIOL. | | | CALCULATED LEGAL | CALCULATED VIOL. |
|---|---|---|---|---|---|
| 142 | 0 | PASS | 142 | 140.8 | 1.2 |
| 23 | 6 | STOP | 29 | 17.2 | 11.8 |
| 165 | 6 | TOTAL | 171 | 158.0 | 13.0 |

FOR P.050:

| ACTUAL LEGAL | ACTUAL VIOL. | | | CALCULATED LEGAL | CALCULATED VIOL. |
|---|---|---|---|---|---|
| 133 | 0 | PASS | 133 | 132.4 | .6 |
| 32 | 6 | STOP | 38 | 25.6 | 12.4 |
| 165 | 6 | TOTAL | 171 | 158.0 | 13.0 |

FOR P.010:

| ACTUAL LEGAL | ACTUAL VIOL. | | | CALCULATED LEGAL | CALCULATED VIOL. |
|---|---|---|---|---|---|
| 112 | 0 | PASS | 112 | 112.0 | .0 |
| 53 | 6 | STOP | 59 | 46.0 | 13.0 |
| 165 | 6 | TOTAL | 171 | 158.0 | 13.0 |

FOR P.005:

| ACTUAL LEGAL | ACTUAL VIOL. | | | CALCULATED LEGAL | CALCULATED VIOL. |
|---|---|---|---|---|---|
| 108 | 0 | PASS | 108 | 108.0 | .0 |
| 57 | 6 | STOP | 63 | 50.0 | 13.0 |
| 165 | 6 | TOTAL | 171 | 158.0 | 13.0 |

FOR P.001:

| ACTUAL LEGAL | ACTUAL VIOL. | | | CALCULATED LEGAL | CALCULATED VIOL. |
|---|---|---|---|---|---|
| 102 | 0 | PASS | 102 | 102.0 | .0 |
| 63 | 6 | STOP | 69 | 56.0 | 13.0 |
| 165 | 6 | TOTAL | 171 | 158.0 | 13.0 |



ClibPDF - www.fastio.com

NO. SCALES,SCALE NUMBERS?2 2 6

| | | | |
|---|---|---|---|
| BO | = -1.38714 | B1 | = .639636E-1 |
| XBAR | = 26.4241 | SSX | = 11164.9 |
| SYX | = 1.20738 | MSE | = 1.45778 |

CRITICAL 34 KIP VALUES:

| PROB | SCALE | MEAN KIPS |
|---|---|---|
| P.100 = | 33.18 | 32.4448 |
| P.050 = | 32.7 | 31.9955 |
| P.010 = | 31.82 | 31.1718 |
| P.005 = | 31.5 | 30.8723 |
| P.001 = | 30.84 | 30.2545 |

FOR P.100:

| ACTUAL LEGAL | ACTUAL VIOL. | | | CALCULATED LEGAL | CALCULATED VIOL. |
|---|---|---|---|---|---|
| 141 | 0 | PASS | 141 | 139.5 | 1.5 |
| 24 | 6 | STOP | 30 | 17.2 | 12.8 |
| 165 | 6 | TOTAL | 171 | 156.8 | 14.2 |

FOR P.050:

| ACTUAL LEGAL | ACTUAL VIOL. | | | CALCULATED LEGAL | CALCULATED VIOL. |
|---|---|---|---|---|---|
| 126 | 0 | PASS | 126 | 125.6 | .4 |
| 39 | 6 | STOP | 45 | 31.2 | 13.8 |
| 165 | 6 | TOTAL | 171 | 156.8 | 14.2 |

FOR P.010:

| ACTUAL LEGAL | ACTUAL VIOL. | | | CALCULATED LEGAL | CALCULATED VIOL. |
|---|---|---|---|---|---|
| 111 | 0 | PASS | 111 | 110.9 | .1 |
| 54 | 6 | STOP | 60 | 45.8 | 14.2 |
| 165 | 6 | TOTAL | 171 | 156.8 | 14.2 |

FOR P.005:

| ACTUAL LEGAL | ACTUAL VIOL. | | | CALCULATED LEGAL | CALCULATED VIOL. |
|---|---|---|---|---|---|
| 107 | 0 | PASS | 107 | 107.0 | .0 |
| 58 | 6 | STOP | 64 | 49.8 | 14.2 |
| 165 | 6 | TOTAL | 171 | 156.8 | 14.2 |

FOR P.001:

| ACTUAL LEGAL | ACTUAL VIOL. | | | CALCULATED LEGAL | CALCULATED VIOL. |
|---|---|---|---|---|---|
| 99 | 0 | PASS | 99 | 99.0 | .0 |
| 66 | 6 | STOP | 72 | 57.8 | 14.2 |
| 165 | 6 | TOTAL | 171 | 156.8 | 14.2 |



ClibPDF - www.fastio.com

FOR SCALES 1 2 3 4 5 & 6

FOR P. 100:

| ACTUAL LEGAL | ACTUAL VIOL. | | | CALCULATED LEGAL | CALCULATED VIOL. |
|---|---|---|---|---|---|
| 115 | 0 | PASS | 115 | 113.7 | 1.3 |
| 42 | 5 | STOP | 47 | 35.6 | 11.4 |
| 157 | 5 | TOTAL | 162 | 149.3 | 12.7 |

FOR P. 050:

| ACTUAL LEGAL | ACTUAL VIOL. | | | CALCULATED LEGAL | CALCULATED VIOL. |
|---|---|---|---|---|---|
| 102 | 0 | PASS | 102 | 101.4 | 0.6 |
| 55 | 5 | STOP | 60 | 47.9 | 12.1 |
| 157 | 5 | TOTAL | 162 | 149.3 | 12.7 |

FOR P. 010:

| ACTUAL LEGAL | ACTUAL VIOL. | | | CALCULATED LEGAL | CALCULATED VIOL. |
|---|---|---|---|---|---|
| 82 | 0 | PASS | 82 | 81.9 | 0.1 |
| 75 | 5 | STOP | 80 | 67.4 | 12.6 |
| 157 | 5 | TOTAL | 162 | 149.3 | 12.7 |

FOR P. 005:

| ACTUAL LEGAL | ACTUAL VIOL. | | | CALCULATED LEGAL | CALCULATED VIOL. |
|---|---|---|---|---|---|
| 78 | 0 | PASS | 78 | 78.0 | 0.0 |
| 79 | 5 | STOP | 84 | 71.4 | 12.6 |
| 157 | 5 | TOTAL | 162 | 149.3 | 12.7 |

FOR P. 001:

| ACTUAL LEGAL | ACTUAL VIOL. | | | CALCULATED LEGAL | CALCULATED VIOL. |
|---|---|---|---|---|---|
| 73 | 0 | PASS | 73 | 73.0 | 0.0 |
| 84 | 5 | STOP | 89 | 76.3 | 12.7 |
| 157 | 5 | TOTAL | 162 | 149.3 | 12.7 |



ClibPDF - www.fastio.com

FOR SCALES 2 3 4 5 & 6

FOR P. 100:

| ACTUAL LEGAL | ACTUAL VIOL. | | | CALCULATED LEGAL | CALCULATED VIOL. |
|---|---|---|---|---|---|
| 119 | 0 | PASS | 119 | 117.4 | 1.6 |
| 38 | 5 | STOP | 43 | 31.0 | 12.0 |
| 157 | 5 | TOTAL | 162 | 148.4 | 13.6 |

FOR P. 050:

| ACTUAL LEGAL | ACTUAL VIOL. | | | CALCULATED LEGAL | CALCULATED VIOL. |
|---|---|---|---|---|---|
| 103 | 0 | PASS | 103 | 102.4 | 0.6 |
| 54 | 5 | STOP | 59 | 46.0 | 13.0 |
| 157 | 5 | TOTAL | 162 | 148.4 | 13.6 |

FOR P. 010:

| ACTUAL LEGAL | ACTUAL VIOL. | | | CALCULATED LEGAL | CALCULATED VIOL. |
|---|---|---|---|---|---|
| 85 | 0 | PASS | 85 | 84.9 | 0.1 |
| 72 | 5 | STOP | 77 | 63.5 | 13.5 |
| 157 | 5 | TOTAL | 162 | 148.4 | 13.6 |

FOR P. 005:

| ACTUAL LEGAL | ACTUAL VIOL. | | | CALCULATED LEGAL | CALCULATED VIOL. |
|---|---|---|---|---|---|
| 78 | 0 | PASS | 78 | 78.0 | 0.0 |
| 79 | 5 | STOP | 84 | 70.4 | 13.6 |
| 157 | 5 | TOTAL | 162 | 148.4 | 13.6 |

FOR P. 001:

| ACTUAL LEGAL | ACTUAL VIOL. | | | CALCULATED LEGAL | CALCULATED VIOL. |
|---|---|---|---|---|---|
| 73 | 0 | PASS | 73 | 73.0 | 0.0 |
| 84 | 5 | STOP | 89 | 75.4 | 13.6 |
| 157 | 5 | TOTAL | 162 | 148.4 | 13.6 |



ClibPDF - www.fastio.com

FOR SCALES 2 3 4 & 6

FOR P. 100:

| ACTUAL LEGAL | ACTUAL VIOL. | | | CALCULATED LEGAL | CALCULATED VIOL. |
|---|---|---|---|---|---|
| 116 | 0 | PASS | 116 | 114.7 | 1.3 |
| 41 | 5 | STOP | 46 | 32.8 | 13.2 |
| 157 | 5 | TOTAL | 162 | 147.5 | 14.5 |

FOR P. 050:

| ACTUAL LEGAL | ACTUAL VIOL. | | | CALCULATED LEGAL | CALCULATED VIOL. |
|---|---|---|---|---|---|
| 104 | 0 | PASS | 104 | 103.5 | 0.5 |
| 53 | 5 | STOP | 58 | 44.0 | 14.0 |
| 157 | 5 | TOTAL | 162 | 147.5 | 14.5 |

FOR P. 010:

| ACTUAL LEGAL | ACTUAL VIOL. | | | CALCULATED LEGAL | CALCULATED VIOL. |
|---|---|---|---|---|---|
| 83 | 0 | PASS | 83 | 82.9 | 0.1 |
| 74 | 5 | STOP | 79 | 64.5 | 14.5 |
| 157 | 5 | TOTAL | 162 | 147.5 | 14.5 |

FOR P. 005:

| ACTUAL LEGAL | ACTUAL VIOL. | | | CALCULATED LEGAL | CALCULATED VIOL. |
|---|---|---|---|---|---|
| 78 | 0 | PASS | 78 | 78.0 | 0.0 |
| 79 | 5 | STOP | 84 | 69.5 | 14.5 |
| 157 | 5 | TOTAL | 162 | 147.5 | 14.5 |

FOR P. 001:

| ACTUAL LEGAL | ACTUAL VIOL. | | | CALCULATED LEGAL | CALCULATED VIOL. |
|---|---|---|---|---|---|
| 70 | 0 | PASS | 70 | 70.0 | 0.0 |
| 87 | 5 | STOP | 92 | 77.5 | 14.5 |
| 157 | 5 | TOTAL | 162 | 147.5 | 14.5 |



ClibPDF - www.fastio.com

FOR SCALES 2 4 & 6

FOR P. 100:

| ACTUAL LEGAL | ACTUAL VIOL. | | | CALCULATED LEGAL | CALCULATED VIOL. |
|---|---|---|---|---|---|
| 114 | 0 | PASS | 114 | 112.4 | 1.6 |
| 43 | 5 | STOP | 48 | 32.8 | 15.2 |
| 157 | 5 | TOTAL | 162 | 145.1 | 16.9 |

FOR P. 050:

| ACTUAL LEGAL | ACTUAL VIOL. | | | CALCULATED LEGAL | CALCULATED VIOL. |
|---|---|---|---|---|---|
| 98 | 0 | PASS | 98 | 97.6 | 0.4 |
| 59 | 5 | STOP | 64 | 47.5 | 16.5 |
| 157 | 5 | TOTAL | 162 | 145.1 | 16.9 |

FOR P. 010:

| ACTUAL LEGAL | ACTUAL VIOL. | | | CALCULATED LEGAL | CALCULATED VIOL. |
|---|---|---|---|---|---|
| 80 | 0 | PASS | 80 | 79.9 | 0.1 |
| 77 | 5 | STOP | 82 | 65.2 | 16.8 |
| 157 | 5 | TOTAL | 162 | 145.1 | 16.9 |

FOR P. 005:

| ACTUAL LEGAL | ACTUAL VIOL. | | | CALCULATED LEGAL | CALCULATED VIOL. |
|---|---|---|---|---|---|
| 77 | 0 | PASS | 77 | 77.0 | 0.0 |
| 80 | 5 | STOP | 85 | 68.1 | 16.9 |
| 157 | 5 | TOTAL | 162 | 145.1 | 16.9 |

FOR P. 001:

| ACTUAL LEGAL | ACTUAL VIOL. | | | CALCULATED LEGAL | CALCULATED VIOL. |
|---|---|---|---|---|---|
| 69 | 0 | PASS | 69 | 69.0 | 0.0 |
| 88 | 5 | STOP | 93 | 76.1 | 16.9 |
| 157 | 5 | TOTAL | 162 | 145.1 | -16.9 |



ClibPDF - www.fastio.com

FOR SCALES 2 & 6

FOR P. 100:

| ACTUAL LEGAL | ACTUAL VIOL. | | | CALCULATED LEGAL | CALCULATED VIOL. |
|---|---|---|---|---|---|
| 108 | 0 | PASS | 108 | 106.8 | 1.2 |
| 49 | 5 | STOP | 54 | 37.7 | 16.3 |
| 157 | 5 | TOTAL | 162 | 144.5 | 17.5 |

FOR P. 050:

| ACTUAL LEGAL | ACTUAL VIOL. | | | CALCULATED LEGAL | CALCULATED VIOL. |
|---|---|---|---|---|---|
| 89 | 0 | PASS | 89 | 88.6 | 0.4 |
| 68 | 5 | STOP | 73 | 55.8 | 17.2 |
| 157 | 5 | TOTAL | 162 | 144.5 | 17.5 |

FOR P. 010:

| ACTUAL LEGAL | ACTUAL VIOL. | | | CALCULATED LEGAL | CALCULATED VIOL. |
|---|---|---|---|---|---|
| 76 | 0 | PASS | 76 | 76.0 | 0.0 |
| 81 | 5 | STOP | 86 | 68.5 | 17.5 |
| 157 | 5 | TOTAL | 162 | 144.5 | 17.5 |

FOR P. 005:

| ACTUAL LEGAL | ACTUAL VIOL. | | | CALCULATED LEGAL | CALCULATED VIOL. |
|---|---|---|---|---|---|
| 73 | 0 | PASS | 73 | 73.0 | 0.0 |
| 84 | 5 | STOP | 89 | 71.5 | 17.5 |
| 157 | 5 | TOTAL | 162 | 144.5 | 17.5 |

FOR P. 001:

| ACTUAL LEGAL | ACTUAL VIOL. | | | CALCULATED LEGAL | CALCULATED VIOL. |
|---|---|---|---|---|---|
| 66 | 0 | PASS | 66 | 66.0 | 0.0 |
| 91 | 5 | STOP | 96 | 78.5 | 17.5 |
| 157 | 5 | TOTAL | 162 | 144.5 | 17.5 |



ClibPDF - www.fastio.com

FOR SCALES 1 2 3 4 5 & 6 128 ABORTED

FOR P. 100:

| | | CALCULATED LEGAL | VIOL. |
|---|---|---|---|
| PASS | 1878 | 1871.8 | 6.2 |
| STOP | 142 | 105.2 | 36.8 |
| TOTAL | 2020 | 1976.9 | 43.1 |

FOR P. 050:

| | | CALCULATED LEGAL | VIOL. |
|---|---|---|---|
| PASS | 1838 | 1834.5 | 3.5 |
| STOP | 182 | 142.4 | 39.6 |
| TOTAL | 2020 | 1976.9 | 43.1 |

FOR P. 010:

| | | CALCULATED LEGAL | VIOL. |
|---|---|---|---|
| PASS | 1735 | 1734.5 | 0.5 |
| STOP | 285 | 242.4 | 42.6 |
| TOTAL | 2020 | 1976.9 | 43.1 |

FOR P. 005:

| | | CALCULATED LEGAL | VIOL. |
|---|---|---|---|
| PASS | 1704 | 1703.8 | 0.2 |
| STOP | 316 | 273.1 | 42.9 |
| TOTAL | 2020 | 1976.9 | 43.1 |

FOR P. 001:

| | | CALCULATED LEGAL | VIOL. |
|---|---|---|---|
| PASS | 1628 | 1628.0 | 0.0 |
| STOP | 392 | 348.9 | 43.1 |
| TOTAL | 2020 | 1976.9 | 43.1 |



ClibPDF - www.fastio.com

FOR SCALES 2 3 4 5 & 6 128 ABORTED

FOR P. 100:

| | | CALCULATED LEGAL | VIOL. |
|---|---|---|---|
| PASS | 1884 | 1877.6 | 6.4 |
| STOP | 136 | 98.8 | 37.2 |
| TOTAL | 2020 | 1976.4 | 43.6 |

FOR P. 050:

| | | CALCULATED LEGAL | VIOL. |
|---|---|---|---|
| PASS | 1836 | 1833.0 | 3.0 |
| STOP | 184 | 143.4 | 40.6 |
| TOTAL | 2020 | 1976.4 | 43.6 |

FOR P. 010:

| | | CALCULATED LEGAL | VIOL. |
|---|---|---|---|
| PASS | 1731 | 1730.6 | 0.4 |
| STOP | 289 | 245.8 | 43.2 |
| TOTAL | 2020 | 1976.4 | 43.6 |

FOR P. 005:

| | | CALCULATED LEGAL | VIOL. |
|---|---|---|---|
| PASS | 1704 | 1703.8 | 0.2 |
| STOP | 316 | 272.6 | 43.4 |
| TOTAL | 2020 | 1976.4 | 43.6 |

FOR P. 001:

| | | CALCULATED LEGAL | VIOL. |
|---|---|---|---|
| PASS | 1638 | 1638.0 | 0.0 |
| STOP | 382 | 338.5 | 43.5 |
| TOTAL | 2020 | 1976.4 | 43.6 |



ClibPDF - www.fastio.com

FOR SCALES 2 3 4 & 6 128 ABORTED

FOR P. 100:

| | | CALCULATED LEGAL | CALCULATED VIOL. |
|---|---|---|---|
| PASS | 1878 | 1871.7 | 6.3 |
| STOP | 142 | 103.3 | 38.7 |
| TOTAL | 2020 | 1975.0 | 45.0 |

FOR P. 050:

| | | CALCULATED LEGAL | CALCULATED VIOL. |
|---|---|---|---|
| PASS | 1830 | 1827.0 | 3.0 |
| STOP | 190 | 147.9 | 42.1 |
| TOTAL | 2020 | 1975.0 | 45.0 |

FOR P. 010:

| | | CALCULATED LEGAL | CALCULATED VIOL. |
|---|---|---|---|
| PASS | 1724 | 1723.6 | 0.4 |
| STOP | 296 | 251.4 | 44.6 |
| TOTAL | 2020 | 1975.0 | 45.0 |

FOR P. 005:

| | | CALCULATED LEGAL | CALCULATED VIOL. |
|---|---|---|---|
| PASS | 1696 | 1695.8 | 0.2 |
| STOP | 324 | 279.2 | 44.8 |
| TOTAL | 2020 | 1975.0 | 45.0 |

FOR P. 001:

| | | CALCULATED LEGAL | CALCULATED VIOL. |
|---|---|---|---|
| PASS | 1626 | 1626.0 | 0.0 |
| STOP | 394 | 349.0 | 45.0 |
| TOTAL | 2020 | 1975.0 | 45.0 |



ClibPDF - www.fastio.com

FOR SCALES 2 4 & 6 128 ABORTED

FOR P. 100:

| | | CALCULATED LEGAL | VIOL. |
|---|---|---|---|
| PASS | 1876 | 1868.3 | 7.7 |
| STOP | 144 | 101.8 | 42.2 |
| TOTAL | 2020 | 1970.1 | 49.9 |

FOR P. 050:

| | | CALCULATED LEGAL | VIOL. |
|---|---|---|---|
| PASS | 1810 | 1807.1 | 2.9 |
| STOP | 210 | 163.1 | 46.9 |
| TOTAL | 2020 | 1970.1 | 49.9 |

FOR P. 010:

| | | CALCULATED LEGAL | VIOL. |
|---|---|---|---|
| PASS | 1714 | 1713.5 | 0.5 |
| STOP | 306 | 256.7 | 49.3 |
| TOTAL | 2020 | 1970.1 | 49.9 |

FOR P. 005:

| | | CALCULATED LEGAL | VIOL. |
|---|---|---|---|
| PASS | 1680 | 1679.7 | 0.3 |
| STOP | 340 | 290.4 | 49.6 |
| TOTAL | 2020 | 1970.1 | 49.9 |

FOR P. 001:

| | | CALCULATED LEGAL | VIOL. |
|---|---|---|---|
| PASS | 1602 | 1602.0 | 0.0 |
| STOP | 418 | 368.2 | 49.8 |
| TOTAL | 2020 | 1970.1 | 49.9 |



ClibPDF - www.fastio.com

FOR SCALES 2 & 6 128 ABORTED

FOR P. 100:

| | | CALCULATED LEGAL | VIOL. |
|---|---|---|---|
| PASS | 1851 | 1843.1 | 7.9 |
| STOP | 169 | 121.8 | 47.2 |
| TOTAL | 2020 | 1964.9 | 55.1 |

FOR P. 050:

| | | CALCULATED LEGAL | VIOL. |
|---|---|---|---|
| PASS | 1787 | 1783.6 | 3.4 |
| STOP | 233 | 181.3 | 51.7 |
| TOTAL | 2020 | 1964.9 | 55.1 |

FOR P. 010:

| | | CALCULATED LEGAL | VIOL. |
|---|---|---|---|
| PASS | 1680 | 1679.5 | 0.5 |
| STOP | 340 | 285.4 | 54.6 |
| TOTAL | 2020 | 1964.9 | 55.1 |

FOR P. 005:

| | | CALCULATED LEGAL | VIOL. |
|---|---|---|---|
| PASS | 1647 | 1646.8 | 0.2 |
| STOP | 373 | 318.2 | 54.8 |
| TOTAL | 2020 | 1964.9 | 55.1 |

FOR P. 001:

| | | CALCULATED LEGAL | VIOL. |
|---|---|---|---|
| PASS | 1571 | 1571.0 | 0.0 |
| STOP | 449 | 394.0 | 55.0 |
| TOTAL | 2020 | 1964.9 | 55.1 |



ClibPDF - www.fastio.com

ClibPDF - www.fastio.com