Lateral Electronic Guidance System for Vehicles

FINAL REPORT # FHWA/CA/TL-93-16

CALTRANS STUDY #F90TL05

Technical Report Documentation Page

1. Report No.	2. Government Accession No.	3. Recipient's Catalog No.
FHWA-CA/TL-93-16	None	None

4. Title and Subtitle	5. Report Date
Lateral Electronic Guidance System for Vehicles	June 1993
	6. Performing Organization Code
7. Authors	8. Performing Organization Report No.
Mahlon D. Heller	65-331-631151
9. Performing Organization Name and Address	10. Work Unit No.
Division of New Technology, Materials and Research California Department of Transportation Sacramento, CA 95819	11. Contract or Grant No. F90TL05
12. Sponsoring Agency Name and Address	13. Type of Report and Period Covered Draft Final
California Department of Transportation Sacramento, CA 95819	14. Sponsoring Agency Code

15. Supplementary Notes

This project was performed in cooperation with the U.S. Department of Transportation, Federal Highway Administration.

16. Abstract

This research is one component related to investigating the feasibility of developing an AHS, Automated Highway System, that is a strategy under IVHS, Intelligent Vehicle Highway System. The objective of this research is to investigate using vision, passive wire and active microwave/radar techniques for automatic lateral guidance of highway vehicles with conventional steering. On-vehicle tests indicate that vision, passive wire and radar sensor techniques can be used to provide the necessary information to laterally control a vehicle with conventional steering at highway speeds up to 70 mph within ±0.15 meters on straight and curved sections and within ±0.3 meters when the vehicle transitions from a straight to curve road section or curve to straight road section. Only lateral displacement from the sensors is passed to the steering controller for lateral vehicle control. The research of this project indicates that curve preview (looking ahead to obtain curve information) is not required. The steering control computer algorithm is based on the sliding mode approach.

17. Key Words	18. Distribution Statement
lateral vehicle control vehicle guidance	No restrictions. This document is available to the public through the National Technical Information Service, Springfield, VA 22161

19. Security Classif. (of this report)	20. Security Classif. (of this page)	21. No. of Pages	22. Price
Unclassified	Unclassified	86	

Form DOT F 1700.7 (8-72)

REPORT NO. FHWA-CA/TL-93-16
STUDY NO. 65N154

LATERAL ELECTRONIC GUIDANCE SYSTEM FOR VEHICLES

DRAFT FINAL REPORT
JUNE 30, 1993

TABLE OF CONTENTS

	Page
FIGURES	vi
TABLES	ix
DISCLAIMER	x
DISCLOSURE STATEMENT	xi
ACKNOWLEDGMENTS	xii
CONVERSION FACTORS	xiii
1. INTRODUCTION	1- 1
1.1 Subject	1- 1
1.2 Research Objectives	1- 1
1.3 Research Findings Summary	1- 2
1.3.1 Vision Module	1- 2
1.3.2 Passive Wire Module	1- 3
1.3.3 Microwave/Radar Module	1- 4
1.3.4 Steering Module	1- 4
1.4 Organization of Report	1- 5
2. ON-VEHICLE COMPUTER SYSTEM	2- 1
3. OFF-VEHICLE DEVELOPMENT SYSTEM	3- 1
4. VISION MODULE	4- 1
4.1 Block-Diagram and Theory of Operation	4- 1
4.2 Location of Vision Sensor	4- 2
4.3 Environmental Tests	4- 2
4.4 Construction of Lateral Reference	4- 3
4.5 Evolution of Software Machine Vision Algorithms	4- 3
4.6 On-Vehicle Tests	4- 4
4.7 On-Vehicle/Highway Infrastructure Cost-Tradeoffs	4- 9

TABLE OF CONTENTS (Continued)

	Page
4.8 Summary	4- 9
5. PASSIVE WIRE MODULE	5- 1
5.1 Theory and Block Diagram	5- 1
5.2 Location of Passive Wire Sensor	5- 5
5.3 Evolution of Coil and Hardware Design	5- 7
5.4 Evaluation of Lateral Reference Design	5-12
5.5 Test and Diagnostic Equipment Constructed	5-14
5.6 On-Vehicle Tests	5-15
5.7 On-Vehicle/Highway Infrastructure Cost-Tradeoffs	5-20
5.8 Summary	5-20
6. RADAR MODULE	6- 1
6.1 Circuit Diagram and Theory of Operation	6- 1
6.2 Location on Vehicle	6- 8
6.3 Lateral Reference Material	6- 8
6.4 Environmental Tests	6-11
6.5 Evolution of the Design	6-11
6.6 On-Vehicle Tests	6-14
6.7 On-Vehicle/Highway Infrastructure Cost-Tradeoffs	6-19
6.8 Summary	6-19
7. STEERING MODULE	7- 1
7.1 Block Diagram and Theory of Operation	7- 1
7.2 Location of Motor	7- 3
7.3 Relationship Between Motor Shaft Angle and Wheel Angle	7- 3
7.4 Motor-Bench Tests And Simulated Load	7- 3
7.5 On-Vehicle Open-Loop Tests	7- 6
7.6 Evolution of Steering Control Law	7- 6

TABLE OF CONTENTS (Continued)

	Page
7.7 On-Vehicle Steering Control Tests	7- 7
7.8 Summary	7- 7
8. CONCLUSION AND RECOMMENDATIONS	8- 1
APPENDIX. VNIS Paper Given in Oct. 93, Ottawa, Canada	A- 1
REFERENCES	R- 1
ENCLOSURES	
Video Tape of Vision Test Runs	
Video Tape of Passive Wire Test Runs	
Video Tape of Radar Tests	
Five Minute Composite Video tape of Vision, Passive Wire, and Radar	

FIGURES

Figure		Page
2.1.	Chevrolet Celebrity Station Wagon Used For On-Vehicle Tests	2- 1
2.2.	Location Of The Computer, Motor, And Other Electronics In The Vehicle	2- 2
2.3.	Placement Of The Computer Monitor And Keyboard	2- 2
2.4.	Lateral Guidance On-Vehicle Computer system And Functions Performed	2- 4
4.1.	Vision Module Block-Diagram	4- 1
4.2.	Experimental Locations Of The Camera	4- 2
	(a) Camera Mounted In The Area Of The Rear View Mirror (b) Camera Mounted In Front Of The Radiator	
4.3.	Vision On-Vehicle Test Run April 23, 1993: Straight to Curve Test Sections	4- 5
4.4.	Vision On-Vehicle Test Run April 27, 1993: Straight to Curve Test Sections	4- 6
4.5.	Vision On-Vehicle Test Run April 27, 1993: Curve to Straight Test Sections	4- 7
4.6.	Vision On-Vehicle Test Run June 15, 1993: Straight Test Section Only	4- 8
5.1.	Geometry of Passive Loop, Exciting And Pickup Coils	5- 1
5.2.	Basic Block Diagram of Passive Wire System	5- 2
5.3.	Distribution of Engine Noise Power vs. Frequency	5- 3
5.4.	Error Voltage vs. Lateral Displacement For Several Passive Materials	5- 4
5.5.	Coils Before Mounting on the Vehicle	5- 6
5.6.	Coils Mounted on the Test Vehicle	5- 6
5.7.	Signal and Noise Frequency Spectrum-Engine Off	5- 8
5.8.	Signal and Noise Frequency Spectrum-Engine On	5- 9

5.9. Detector Circuitry Schematic 5-11

5.10. Drop of Signal Near the Junction of Two Passive Wire Panels 5-14

5.11. Passive-Wire On-Vehicle Test Run July 19, 1993: Straight to Curve Test Sections 5-16

5.12. Passive-Wire On-Vehicle Test Run July 19, 1993: Straight to Curve Test Sections 5-17

5.13. Passive-Wire On-Vehicle Test Run July 19, 1993: Curve to Straight Test Sections 5-18

5.14. Passive-Wire On-Vehicle Test Run July 19, 1993: Curve to Straight Test Sections 5-19

6.1. Radar Module Circuit Diagram 6- 2

6.2. Radar Transmitter Module 6- 3

6.3. Receiver Horn #1 Schematic 6- 4

6.4. Receiver Horn #2 Schematic 6- 5

6.5. Receiving Horn Responses 6- 7

6.6. Reflectivity Measurements 6- 9

6.7. Relative Reflectivity Using Concrete as the Reference 6-10

6.8. Water Effect on Reflectivity 6-12

6.9. Salt Water Effect on Reflectivity 6-13

6.10. Radar On-Vehicle Test Run January 5, 1994: Straight to Curve Test Sections(Aluminum Backed Tape) 6-15

6.11. Radar On-Vehicle Test Run January 5, 1994: Curve to Straight Test Sections(Aluminum Backed Tape) 6-16

6.12. Radar On-Vehicle Test Run January 5, 1994: Straight to Curve Test Sections(Aluminum Backed Tape), Same Run as in Fig. 6.10. 6-17

6.13. Radar On-Vehicle Test Run January 5, 1994: Curve to Straight Test Sections(Vision Stripe) 6-18

7.1. Steering Module Block Diagram 7- 2

7.2. Steering Motor Location Under Vehicle Dash 7- 3

FIGURES (Continued)

Figure		Page
7.3.	Relationship Between Steering Wheel And Vehicle Front Wheel	7- 4
	(a) Wheel Angle Versus Steering Angle Field Data	
	(b) Linear Curve Fit of Field Data	
7.4.	Steering Motor Bench-Test	7- 5

TABLES

Table		Page
6.1	Radar Module Parts Cost Estimate	6- 6

DISCLAIMER

The contents of this report reflect the views of the author who is responsible for the facts and the accuracy of the data presented herein. The contents do not necessarily reflect the official views or policies of the California Department of Transportation or the Federal Highway Administration. This report does not constitute a standard, specification, or regulation.

DISCLOSURE STATEMENT

Caltrans and the FHWA reserve a royalty-free, non-exclusive and irrevocable license to reproduce, publish or otherwise use, and to authorize others to use, the work for government purposes. This research was funded by the State of California, Department of Transportation(Contract No. F90TL05) in cooperation with the U.S. Department of Transportation, Federal Highway Administration. The total revised ceiling amount was $352,984. The research is reported in the final report titled "Lateral Electronic Guidance System for Vehicles."

ACKNOWLEDGMENTS

This research was supported by the staff of the California Department of Transportation Division of New Technology, Materials and Research. Their assistance and cooperation is very much appreciated. A special thanks goes to many of the staff members of the California Department of Transportation Division of New Technology, Materials and Research who assisted the research team over the last three years. We commend Project Monitors, Ms. Mimi Huie and Mr. Sompol Chatusripitak for their support. A very special thanks to Ms. Mimi Huie and Mrs. Elseta Creary who made countless trips to the vehicle test track in West Sacramento with research team members to perform vehicle test runs and to assist in construction of the lateral displacement references. Also, thanks to Mr. David Ashuckian for his support near the beginning of this research project.

Much appreciation goes to the many California State University, Sacramento(CSUS) graduate students and faculty, and Dr. Bruce Johnson and his graduate students and faculty at the University of Nevada, Reno(UNR) who made this research possible. Also, thanks to Mrs. Judy Hilliard of the CSUS Foundation who provided contract support and to Mr. Terry Manns of the CSUS Office of Research and Graduate Studies.

CONVERSION FACTORS

English to Metric System (SI) of Measurement

Quality	English Unit	Multiply By	To Get Metric Equivalent
Length	inches (in) or (")	25.40 .02540	millimetres (mm) metres (m)
	feet (ft) or (')	.3048	metres (m)
	miles (mi)	1.609	kilometres (km)
Area	square inches (in^2) square feet (ft^2) acres	6.432×10^{-4} .09290 .4047	square metres (m^2) square metres (m^2) hectares (ha)
Volume	gallons (gal) cubic feet (ft^3) cubic yards (yd^3)	3.785 .02832 .7646	litre (l) cubic metres (m^3) cubic metres (m^3)
Volume/Time (Flow)	cubic feet per second (ft^3/s)	28.317	litres per second (l/s)
	gallons per minute (gal/min)	.06309	litres per second (l/s)
Mass	pounds (lb)	.4536	kilograms (kg)
Velocity	miles per hour (mph) feet per second (fps)	.4470 .3048	metres per second (m/s) metres per second (m/s)
Acceleration	feet per second squared (ft/s^2)	.3048	metres per second squared (m/s^2)
	acceleration due to force of gravity (G)	9.807	metres per second squared (m/s^2)
Density	(lb/ft^3)	16.02	kilograms per cubic metre (kg/m^3)
Force	pounds (lb) kips (1000 lb)	4.448 4448	newtons (N) newtons (N)
Thermal Energy	British thermal unit (BTU)	1055	joules (J)
Mechanical Energy	foot-pounds (ft-lb) foot-kips (ft-k)	1.356 1356	joules (J) joules (J)
Bending Moment or Torque	inch-pounds (in-lb) foot-pounds (ft-lb)	.1130 1.356	newton-metres (Nm) newton-metres (Nm)
Pressure	pounds per square inch (psi) pounds per square foot (psf)	6895 47.88	pascals (Pa) pascals (Pa)
Plane Angle	degrees (°)	0.0175	radians (rad)
Temperature	degrees fahrenheit (°F)	$\frac{°F - 32}{1.8} = °C$	degrees celsius (°C)
Concentration	parts per million (ppm)	1	milligrams per kilogram (mg/kg)

1. INTRODUCTION

1.1 Subject

This research is one component related to investigating the feasibility of developing an AHS, Automated Highway System, that is a strategy under to IVHS, Intelligent Vehicle Highway System. The objective of this research is to investigate using vision, passive wire, and active microwave/radar techniques for automatic lateral guidance of highway vehicles. The research of this project indicates that vision, passive wire, and radar sensor techniques can be used to provide the necessary information to laterally control a vehicle with conventional steering at highway speeds up-to 31.29 m/s(70 mph). Lateral displacement from the sensors and vehicle velocity are passed to the steering controller for lateral vehicle control. The research of this project indicates that curve-preview, looking ahead to obtain curve information, is not required. The steering control computer algorithm is based on the "sliding mode" approach [14,23].

1.2 Research Objectives

The objective of this research is to investigate lateral computer control of a vehicle using vision, passive wire, and radar lateral reference sensors coupled to a common steering controller.

The objective of the vision research is to use a video camera mounted on the vehicle to determine lateral displacement of a vehicle from a reference. The video frame image is analyzed to determine the lateral displacement of the vehicle from a reference stripe applied down the center of a vehicle lane.

The objective of the passive wire research is to use electronic coils mounted on the vehicle to determine lateral displacement of the vehicle from a reference. A horizontal coil radiates an electromagnetic field that causes current to flow in 0.762 m(2.5 ft) by 1.83 m(6 ft) metal steel-wire grids placed down the center of a lane. The magnetic field generated by the current flowing in the metal grid is sensed by the vertical coil to determine the lateral displacement of the vehicle from the center of the wire grid.

The objective of the microwave/radar research is to use radiating and receiving antennas mounted on the vehicle to "bounce" off of a reference to determine lateral displacement of the vehicle from the reference. The radar technique uses a transmitting horn and receiving horn operating at 24 GHz that are mounted on the front of the vehicle. The radar system detects the lateral displacement of the vehicle from a thin metallic strip applied down the center of a vehicle lane. Microstrip antennas excited by an approximately 400 MHz signal were initially designed and tested.

The main objective of the automatic steering control research is to use the lateral displacement results from the vision, passive wire, or radar sensors to laterally control the vehicle such that the vehicle adequately tracks the reference and remains within a specified lane. Another objective of the steering control research is to provide acceptable ride comfort to passengers while performing computer controlled lateral guidance of the vehicle. The steering control uses a motor attached to the steering column of the vehicle and a digital computer control algorithm that sends commands to the motor based on the lateral displacement obtained from the sensors.

Also, each of the sensors are evaluated in terms of environmental impact conditions on the ability to provide sufficient information for lateral control.

1.3 Research Findings Summary

An extensive literature search was conducted at the beginning of this project. References to applicable literature are made in the research findings for each of the following modules. A paper by Heller and Huie entitled, "Lateral Vehicle Guidance using Vision, Passive Wire, and Radar Sensors," that summarizes this research and its findings was presented at the Vehicle Navigation & Information Systems Conference, October 12-14, 1993 in Ottawa, Canada and was published in the proceedings [1]. Also, the California PATH program has been performing vehicle lateral guidance using a magnetic field sensor to sense the magnetic field of permanent magnets embedded down the center of a vehicle lane [15].

1.3.1 Vision Module

On-vehicle tests using a vision system on a 0.402 km(1/4 mile) track at speeds up-to 104.6 km/hr(65 mph) have been conducted. The 0.402 km(1/4 mile) reference consists of a straight and curved section that has a radius of curvature of approximately 259.1 m(850 feet). The reference is a 0.0508 m(2 inch) white pavement tape centered on a 0.1524 m(6 inch) wide black pavement tape to provide a sharp contrast. The lateral reference stripes can be easily applied on existing asphalt and concrete roads.

Due to changes in the reference and shadows created under the vehicle, the video frame image processing algorithms have been developed through several iterations. Fog lights were mounted to uniformly illuminate the area viewed by the camera for both day and night operation. Furthermore, the time to produce and image has been reduced from 0.216 seconds to 0.05 seconds by using a different capability of the frame grabber mounted in the on-vehicle 486-33MHz PC. Tests indicate that the vision module is operationally reliable.

Accelerating the test vehicle with vision from a stand-still to approximately 24.59 m/s(55 mph), has tracked the reference within ±0.05 meters to ±0.15 meters for straight and curve sections and ±0.3 meters when leaving the straight section and entering the curved section and when leaving the curved section and entering the straight section. These lateral displacement measurements were obtained from the camera mounted in front of the vehicle radiator to the reference stripe. The center of gravity of the vehicle tracked well within the ±0.15 meters when leaving the straight section and entering the curved section and when leaving the curved section and entering the straight section. It was determined via vehicle tests under fog and rain conditions that the reference stripe can be detected under fog and rain conditions. There are presently no plans to test the video camera under snowy conditions as snow is not a major environmental problem for the major cities in California.

Research using vision as an input to a neural network [22] has also been performed. A neural network has been successfully trained to produce lateral displacement. The contract ended prior to our being able to test the neural network on-vehicle. Furthermore, the neural network approach was outside the scope of work for this project.

An extensive literature search revealed research performed by J. S. Dods in 1982 [2] and Kamada and Yoshida [16, p.111-128] that validates the approach used in this research. The first phase of this research was published in the Proceedings of the Applications of Advanced Technologies in Transportation Engineering held August 18-21, 1992 held in Minneapolis, Minnesota [3]. The second phase of the vision research is documented by one the graduate students on the project, Mr. Charles Kelley [4]. An excellent overview of current research using vision for vehicle control can be found in *Vision-based Vehicle Guidance* edited by Ichiro Masaki [16].

1.3.2 Passive Wire Module

The approach used for this research is based on a paper by Velayudhan [8]. The passive wire electronics have been developed through several iterations from the initial design [9] to improve noise rejection, stability, and the mounting apparatus that aligns the coils. Laboratory tests have been performed with different generations of the passive wire electronics. Analysis of the data has lead to the conclusion that any rectangular pattern of metal can be used as the reference. That is, the initial assumption was that single strand loops placed end-to-end was the preferred reference. Test runs have been successful at 17.88 m/s(40 mph). The lateral displacement measured from the sensor to the center of the lane was in the order of ±0.3 meters for both the straight and curved sections of the 0.402 km(1/4 mile) test track. The laboratory data and on-vehicle tests indicate that the passive wire approach is viable for lateral guidance.

A major strength of the passive wire approach is that it is impervious to environmental conditions of fog, rain, or snow. However, a potential weakness is the effect of other metal structures in the vicinity of the passive wire loops such as rebar in concrete pavement and steel bridges. Further, research is required to investigate possible alternative passive wire structures that may overcome this difficulty.

Another potential weakness is the cost to embed the passive wire loops in asphalt and concrete. It should be noted though that slots in the road need only be cut 1/8 inch(0.3175 cm) wide and 1/8 inch(0.3175 cm) deep. The passive wire loops only need to be embedded slightly below the pavement surface. Of course the passive wire loops can be buried as deep as needed to ensure permanent placement of the loops. Furthermore, the pavement slot configuration for the passive wire loops is not critical as far as the control algorithm is concerned.

1.3.3 Microwave/Radar Module

In the first attempt, microwave transmitting and receiving antennas were designed and tested to operate at 2.5 GHz using a trenched guiding system. A slot line was used as a reference. The experiments indicated that it might be difficult to raise the signal strength power above that of noise in this frequency range [7].

It was decided to develop a system that operated in the 24 to 40 GHz range. Since CSUS did not have the requisite equipment at that time, a subcontract was issued to the University of Nevada, Reno (UNR) to develop a system based on the differential reflectivity of asphalt or concrete versus lane striping materials or paint to overcome the effects of water, snow and ice. This will be referred to as the radar module because of the high operating frequencies.

Research by Chatterjee and Subedi [18,19] measuring the dielectric constant of asphalt under various conditions using microwave frequencies supports the proposed radar approach to vehicle lateral guidance. Laboratory tests indicate that 24 GHz is an acceptable frequency and can be implemented at a low cost. Tests and the literature indicate that salt water will not be a problem when operating above 20 MHz [17, chap.2] However the effect of water "beading" on the striping material and the effect of water thickness is yet to be fully evaluated. A strong candidate for the striping material has been identified and a thesis addressing the effect of water thickness is currently underway at UNR.

Results to date show promise that the radar module will also function as an all weather lateral guidance sensor. A summary of the research as of September was presented at the 26th International Symposium on Automotive Technology and Automation held in Aachen, Germany on September 13-17, 1993.

1.3.4 Steering Module

A three-phase pulse-width-modulated brushless dc motor is attached to the steering column through a set of gears that have a 5:1 gear ratio. That is, the motor turns at a rate 5 times faster than the steering column. The motor with a simulated steering load was laboratory tested via a 486-PC. These tests verified that sufficient torque can be generated to control the vehicle steering. "C" algorithms were written to perform Open-Loop motor steering tests. These tests also verified the ability of the steering control motor system to control the angle of the vehicle wheels. The motor hardware subsystem has been operational for approximately a year.

The steering control algorithm(law) uses lateral displacement to compute a steering control angle rate command. The steering control angle rate command is sent to the Galil velocity motor control system. The steering control algorithm has been developed through several iterations. Tracking closely to the reference around a 259.1 m(850 ft) radius curve has been the most challenging requirement. First a control law was designed and implemented based on the Slotine-Li adaptive control approach [6,14,23]. This control law was then modified to compensate for curve tracking. However, oscillations at high speed were noticed and extensive simulations were conducted to replicate this phenomena. Some progress was made via the simulations; but, it was determined that a better method to arrive at a model of the dynamics of the vehicle was to use the collected on-vehicle data as opposed to continue using the PATH models. A vehicle dynamic identification routine written in MATLAB was used to develop a dynamic model of the vehicle. This model has proven to better replicate the on-vehicle steering tests. Using this new model other control law approaches were investigated. A significant positive impact on development of the control law became apparent when the vision processing time to produce lateral displacement was reduced from 0.216 to 0.05 seconds. Data from on-vehicle tests suggested developing a "Sliding Mode" control law that was subsequently designed and was used for the final test runs. Simulations and on-vehicle tests indicate that the vehicle can be controlled satisfactorily on the curve at 31.29 m/s(70 mph) without curve-preview which relies on look ahead information of the vehicle to anticipate the rate of change of the curve. Of course, curve-preview, if available, can be of assistance in laterally controlling vehicles.

1.4 Organization of the Report

The on-vehicle computer system and associated on-vehicle power systems are presented in Section 2. The software development and laboratory development system is discussed in Section 3. Subsequent Sections 4, 5, 6, and 7 discuss the design and development of the Vision, Passive Wire, Radar, and Steering Modules. Conclusion and Recommendations are presented in Section 8.

2. ON-VEHICLE COMPUTER SYSTEM

The on-vehicle computer system is designed to accommodate the Vision, Passive Wire, Radar, and Steering Modules. The on-vehicle computer used is a 486-33 MHz PC installed in a 1989 Chevrolet Celebrity Station Wagon as shown in Figure 2.1.

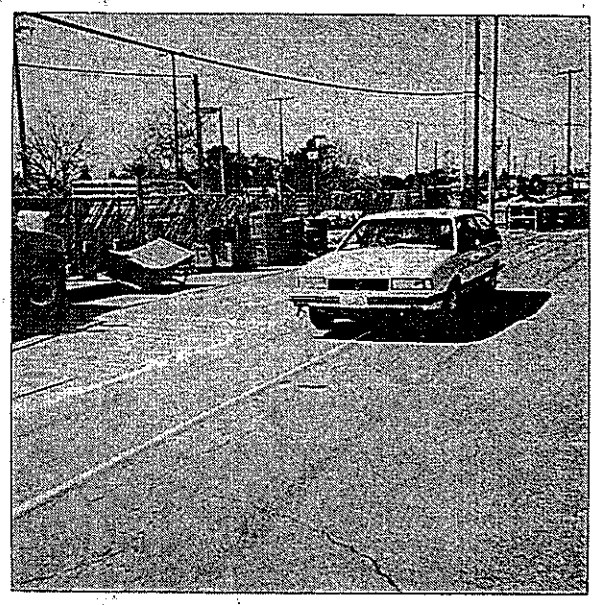

Fig. 2.1. Chevrolet Celebrity Station Wagon Used For On-Vehicle Tests

Power is delivered to the computer system, video, passive wire, and radar electronics using a 1200 Watt, 12 Volt dc to 115 Volt ac converter. Two batteries tied in parallel with diode protection, one being the vehicle's battery, are connected to the 12 Volt dc to 115 Volt ac converter.

The motor amplifier and motor are supplied with 115 Volt ac power from a separate 1200 Watt, 12 Volt dc to 115 Volt ac converter. Two batteries in parallel with diode protection feed the dc to ac converter whose ac output is connected to the motor amplifier. These two batteries that supply the motor power are additional batteries that are separate from the computer and vehicle system batteries. A variac is also placed between the motor amplifier and converter to better regulate the maximum ac voltage sent to the motor amplifier.

The computer system, the motor amplifier, and other equipment are mounted in the area behind the rear passenger seats as shown in Figure 2.2.

Figure 2.2 illustrates the functions of the computer hardware boards inserted in the tower chassis backplane.

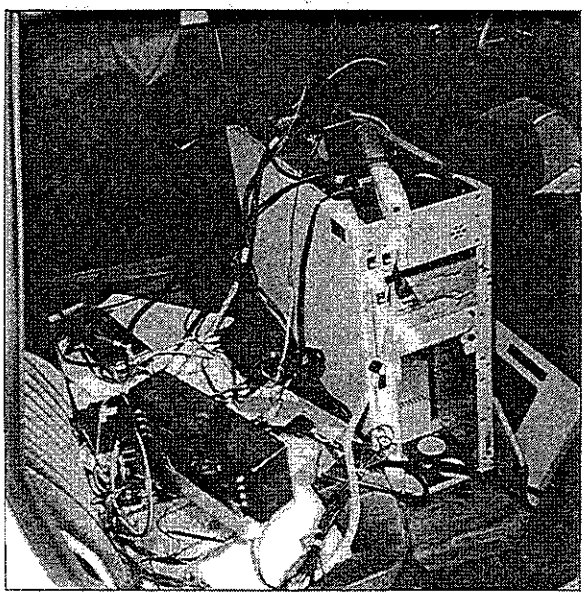

Fig. 2.2. Location Of The Computer, Motor, And Other Electronics In The Vehicle

A computer monitor is mounted between the vehicle driver and the passenger-computer operator. A keyboard is also used by the passenger-computer operator. Figure 2.3 shows the placement of the computer monitor and the keyboard.

Fig. 2.3. Placement Of The Computer Monitor And Keyboard

The computer systems main functions as shown in Figure 2.4 are:

(1) Image processing of frames from a charge coupled device(CCD) video camera to the frame grabber to calculate position of the reference.

(2) Digital signal conditioning of the digital lateral displacement of the vehicle from the reference signal from the vision sensor, passive wire, or radar subsystem. This signal is sent to the control algorithm software function.

(3) Receipt of vehicle speed via communication with a microprocessor that computes vehicle speed in meters per second from pulses from the two-pole generator on the vehicle axle.

(4) Digital computation of the control law that computes the desired steering angle. Lateral displacement sent by the vision, passive wire, or radar modules and vehicle speed are inputs to this control law.

(5) Motor control of the dc brushless steering motor and acquisition of the steering feedback angle.

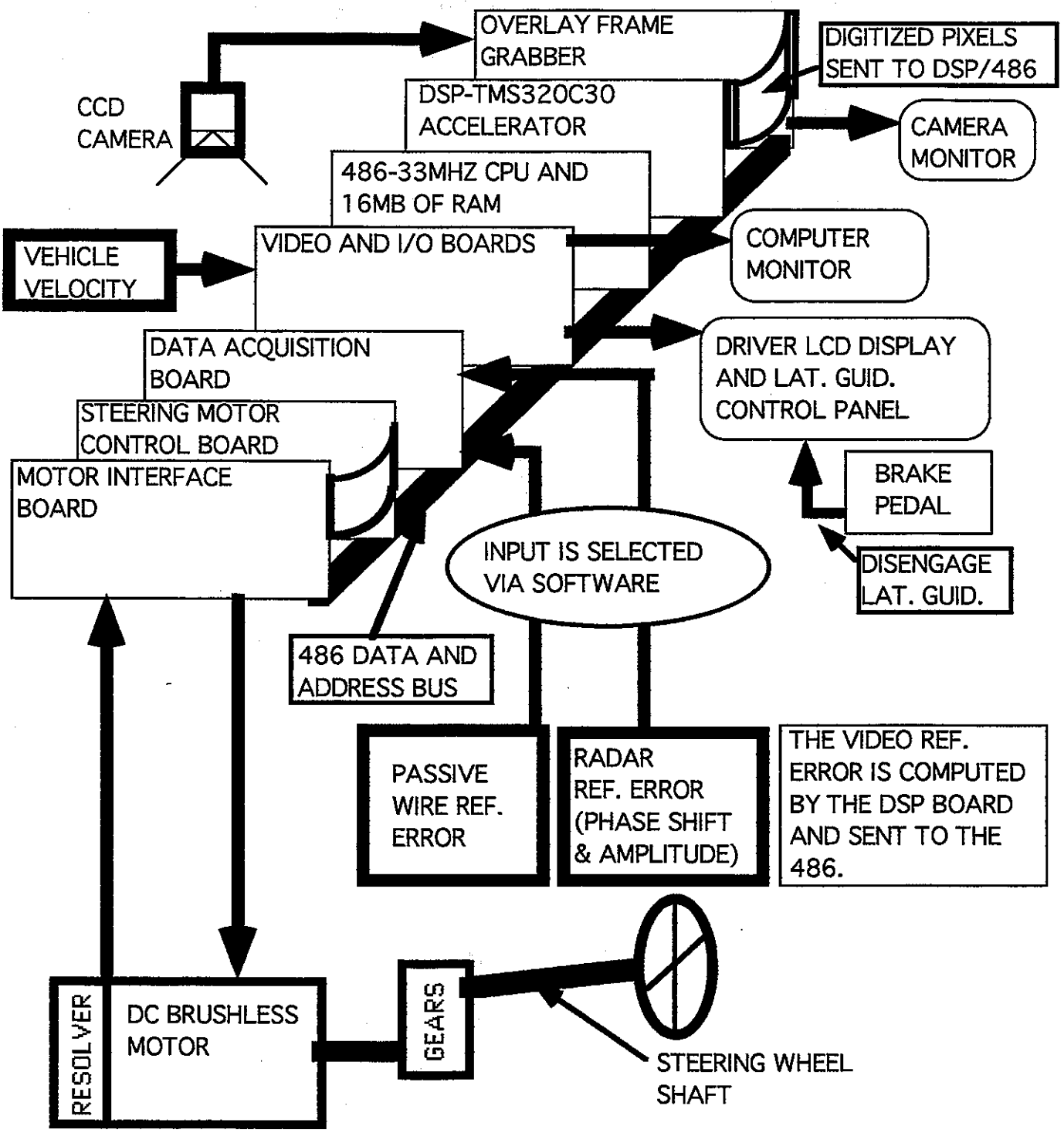

Fig. 2.4. Lateral Guidance On-Vehicle Computer system And Functions Performed

3. OFF-VEHICLE DEVELOPMENT SYSTEM

In the laboratory, a 486-25 MHz system with a data acquisition board and frame grabber are used to compile the "C" algorithms and to perform initial software testing of the algorithms. In addition, a video tape player is used to observe on-vehicle tests with the camera to aid in reviewing the performance of the vision algorithm and to measure the performance of the vehicle in tracking the reference when operating with vision, passive wire, or radar as the lateral displacement sensor.

4. VISION MODULE

4.1 Block-Diagram and Theory of Operation

The following is an overview of the Vision Module. The block-diagram of Figure 4.1 illustrates the hardware and functional aspects of the vision module. The reference for the Vision Module is a 0.0508(2 inch) stripe of some non-black color that

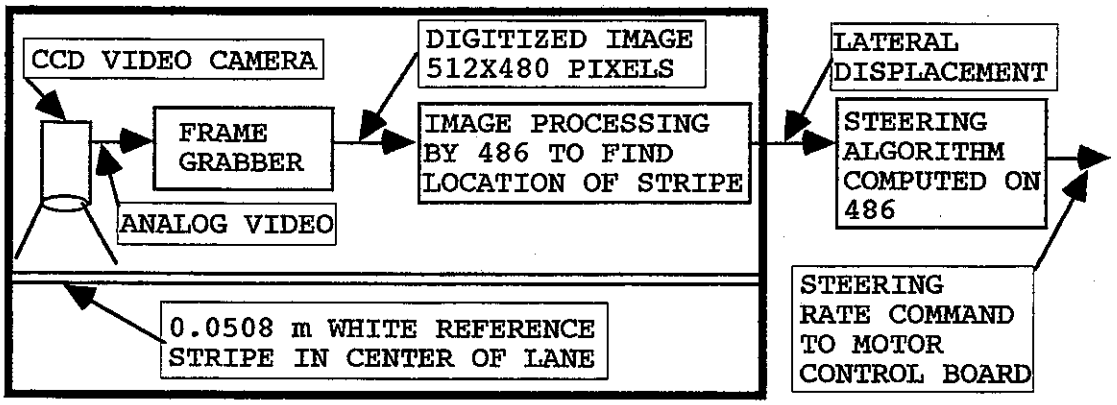

Fig. 4.1. Vision Module Block-Diagram

occupies the center of a vehicle lane. The center of the lane was chosen to improve the control of lighting since the camera is mounted in front of the radiator pointing straight down, avoid confusion with other stripe markings, ensure that a stripe is present as when left or right pavement markings are absent, ensure that the stripe is present when vehicles are in close proximity of each other, improve visibility under heavy fog and rain conditions, and demonstrate proof-of-concept. However, the approach used for the research can be modified to track existing left or right lane markings. Furthermore, it is probable that a wave-length can be found to illuminate a pavement stripe with pigment that would be accepted by drivers and that would emit a response such that a camera tuned to that response could detect the stripe.

The frame grabber located in the 486 PC digitizes an analog video frame into 512 by 480 pixels with intensities of 0 to 255. Only pixels in a horizontal slice, 160 rows by 512 pixels, of the digitized image is examined for location of the stripe. Lighting is controlled by standard vehicle fog lights mounted under the front of the vehicle to illuminate the area under the camera. Linear stretching and thresholding is performed by the frame grabber. Pixels on scan lines of the resulting binary image are examined to ascertain if a sequence of pixels meets the stripe width criterion. If the computed location of the stripe has shifted more than an allowed amount, the past location of the stripe and an error signal are sent to the steering controller.

4.2 Location of Vision Sensor

A 0.02 LUX, 512x480 pixel, CCD Camera with auto iris is mounted in the vehicle. The CCD camera was first mounted inside of the automobile in the vicinity of the rear-view mirror as illustrated in Figure 4.2(a). This arrangement is satisfactory to prove feasibility of the concept. However, it was determined for reasons stated previously, that an improved location for the camera is behind the radiator pointing downward along with a light source illuminating the reference stripe, as illustrated in Figure 4.2(b). The selected location permits the camera to always view the reference stripe regardless of the location of a vehicle in front of the camera.

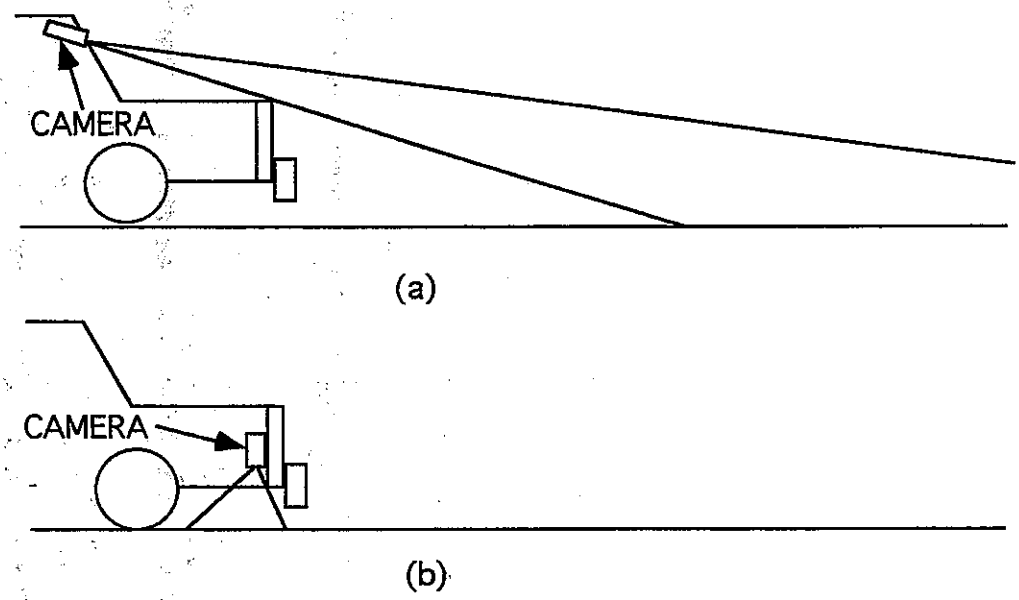

Fig. 4.2. Experimental Locations Of The Camera
(a) Camera Mounted In The Area Of The Rear View Mirror
(b) Camera Mounted In Front Of The Radiator

4.3 Environmental Tests

The camera was set-up in the Caltrans environmental chamber for fog testing. The humidity was raised to 100% to simulate almost zero visibility fog conditions. Tests concluded that with fog lights illuminating the stripe, the camera can easily detect the stripe under fog, rain, day, and night conditions. Fog lights are also used during day operation to eliminate the effects of shadows. However, it is believed that further research can improve the vision algorithms such that use of fog lights will not be required for daylight operations.

Tests during heavy rain storms have verified that the stripe can be detected under heavy rain conditions. Furthermore, the vision system can perform acceptably under light snow conditions. It has been suggested by some that it may not be desirable to operate vehicles autonomously under icy or hazardous weather conditions.

4.4 Construction of Reference

Construction of the reference went through three iterations. First it was attempted to paint a 0.0254 m(1 inch) stripe using a hand operated paint striper. The hand painted stripe was too "wavy", varied significantly in width and was "ragged". The second approach, recommended by the PATH program at Berkeley, California, was implemented by applying a 0.0254 m(1 inch) temporary thin tape to the test track. This tape was truly temporary as it was not long before the stripe began to deteriorate and detach from the pavement. The third and present stripe applied consists of a 0.0508 m(2 inch) white pavement tape on a 0.01524 m(6inch) black pavement tape. This pavement tape has held up well through 110 degree weather and rain storms. More durable aluminum backed pavement tape is also available.

4.5 Evolution of Software Machine Vision Algorithms

The first machine vision approach strategy [3] was to:

(1) Grab a frame(frame is linear-stretched by frame gabber).

(2) Perform a gradient algorithm on 25 scan lines of interest.

(3) Use the gradient information and line width to locate the stripe on a scan line.

(4) Enter these 25 points into a Hough table and fit a straight line through these points using the Hough Transform. The resolution is in the order of 0.0254 m(1 inch).

(5) Use the midpoint of the line as the lateral displacement.

However, the execution time was in the order of 0.167 second. The second and current approach used is to:

(1) Grab a frame(frame is linear-stretched by frame gabber).

(2) Use the Z-Mode of the frame grabber to send only the most significant bit of the 8 bit intensity pixel levels.

(3) Use a line width criterion on each of the scan lines to locate the stripe.

(4) Average the scan line stripe locations to produce a lateral displacement of the vehicle from the reference.

The execution time for the current machine vision method is in the order of 20 milliseconds.

4.6 On-Vehicle tests

Many On-Vehicle tests have been made and are on-going. Figures 4.3, 4.4, 4.5 and 4.6 are plots of data for selected vision runs. The upper plots in Figures 4.3 through 4.6 are the steering angular rate command in radians/second versus time in seconds. The lower plot is the vision sensor lateral displacement in meters versus time in seconds. The test runs were made on a 402 m(1/4 mile) test track located at The California Highway Patrol training facilities where Caltrans also performs crash tests.

Figures 4.3, 4.4 and 4.5 are vehicle test runs beginning at 5 m/s(2 mph) and ending approximately at 25 m/s(55 mph). In Figures 4.3 and 4.4, the vehicle started on the straight section and accelerated to 25 m/s(55 mph). At about 26 seconds the vehicle encountered the 259 m(850 ft.) radius curved section at approximately 22 m/s(50 mph). The lateral displacement generally increases momentarily at the curve. However, it can be seen in the plots of Figures 4.3 and 4.4 that the sensor lateral displacement is moving towards zero. Notice the improvement in curve tracking in Figure 4.3 as compared to Figure 4.4.

Figure 4.5 is data from a test run starting at the beginning of the curve section and completing the test run on the straight section.

Figure 4.6 is data from a short low speed test run starting on the straight section, but ending before reaching the curve section.

In Figures 4.3 through 4.5, a large beginning lateral displacement was used intentionally to verify that the lateral displacement would be decreased to approximately zero. The ride quality was acceptable and the steering wheel turned smoothly during the computer controlled runs shown in Figures 4.3 through 4.6.

Notice in Figures 4.4, 4.5 and 4.6 the lateral displacement remains within less than ±0.15 m(5.91 inch) after approximately 2 seconds from the start of the test run.

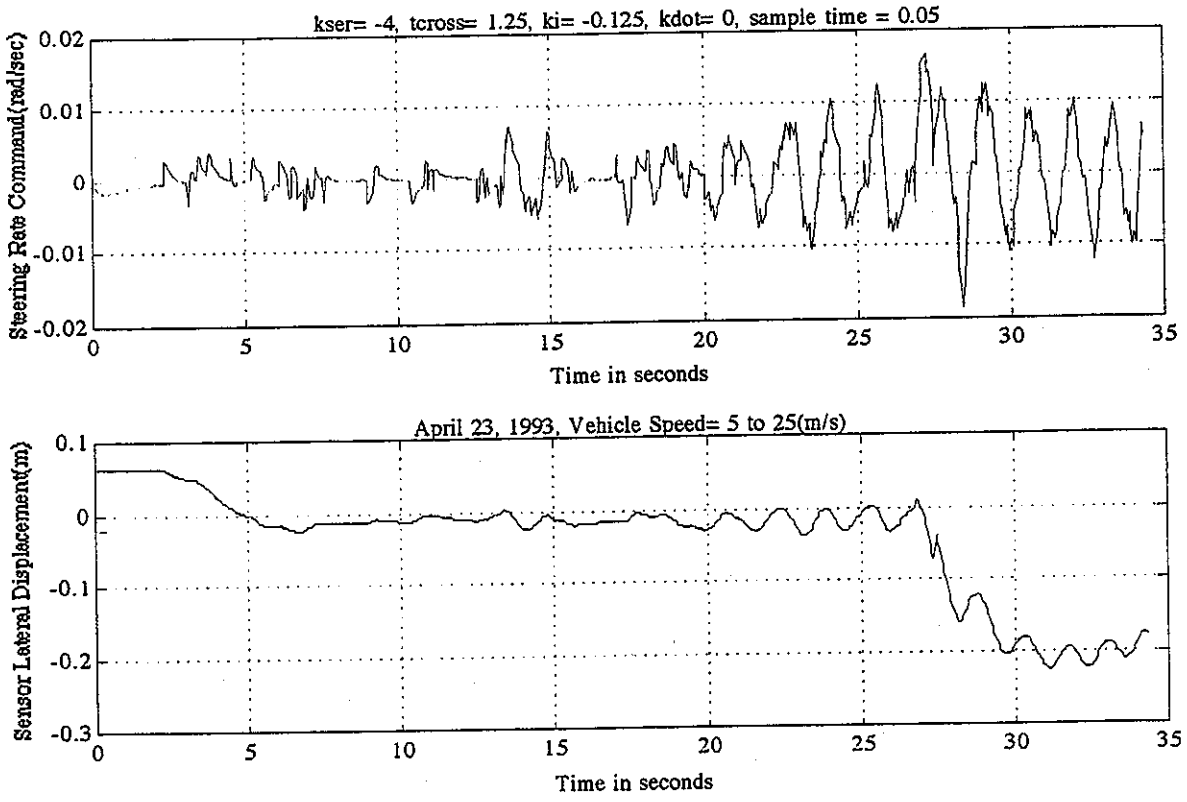

Fig. 4.3. Vision On-Vehicle Test Run April 23, 1993: Straight to Curve Test Sections

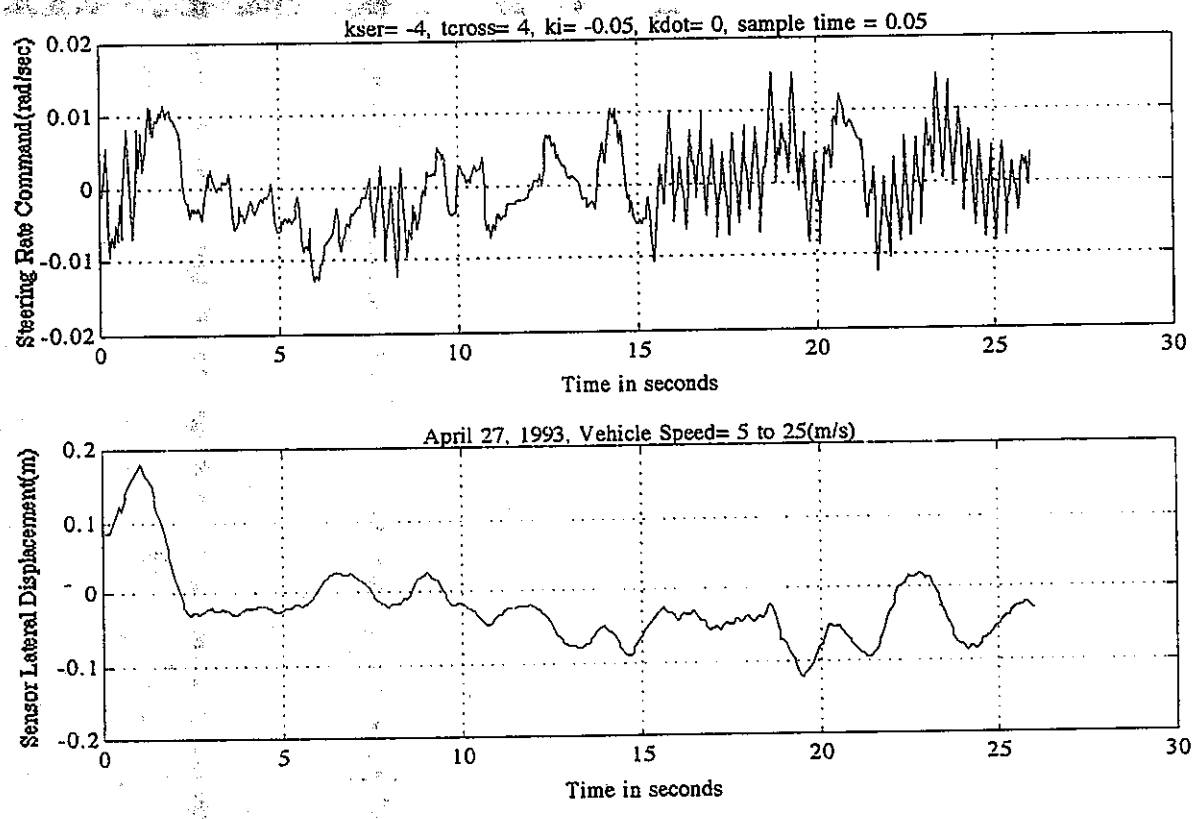

Fig. 4.4. Vision On-Vehicle Test Run April 27, 1993: Straight to Curve Test Sections

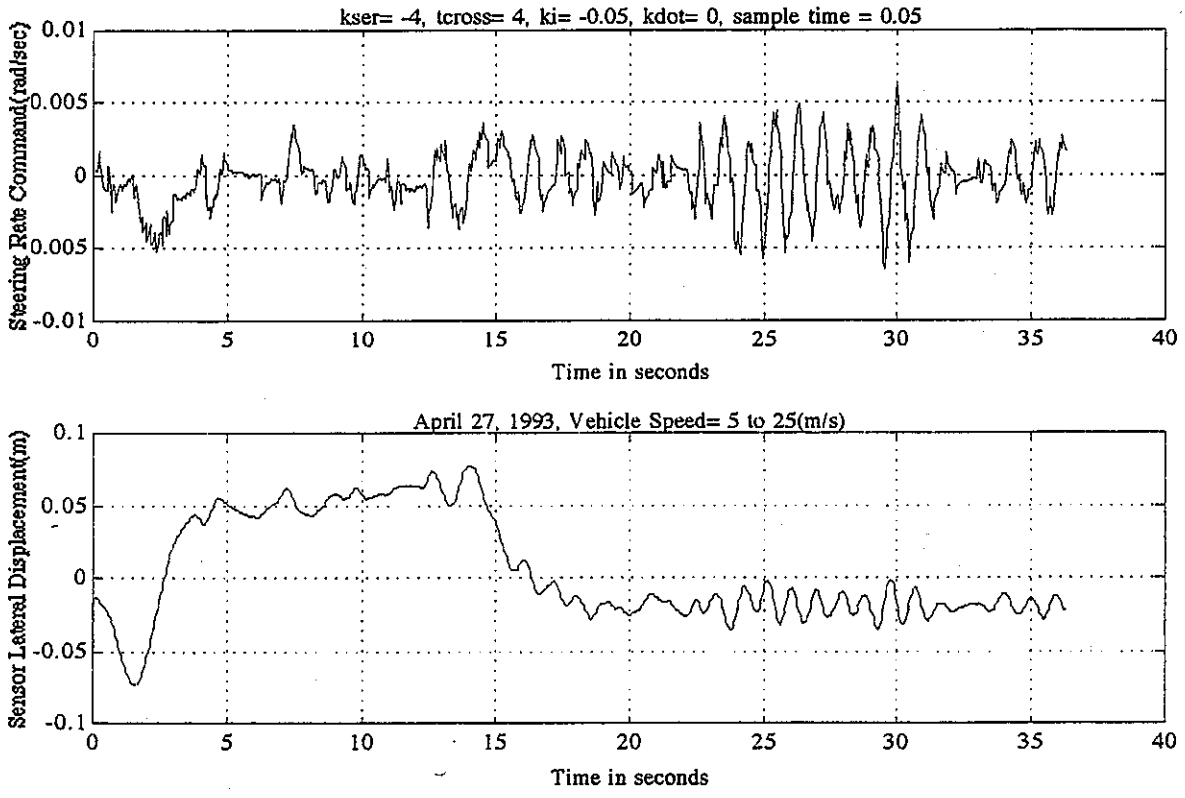

Fig. 4.5. Vision On-Vehicle Test Run April 27, 1993: Curve to Straight Test Sections

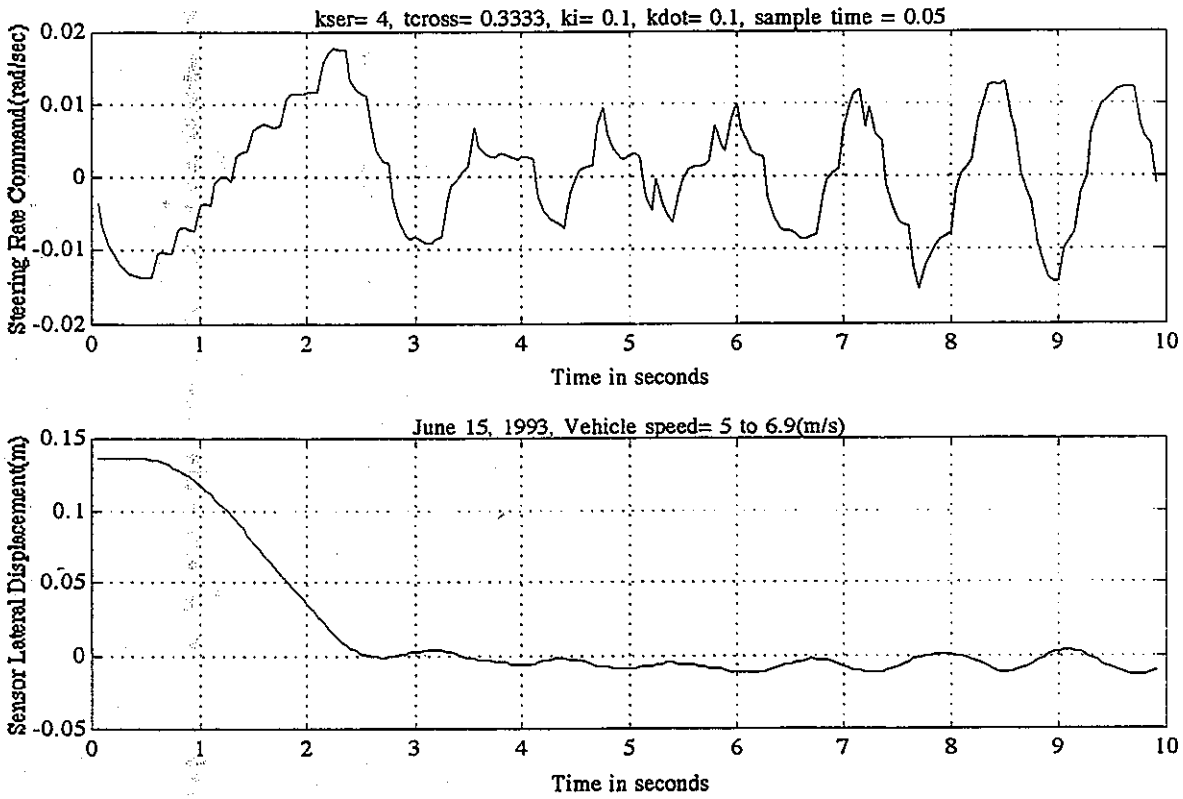

Fig. 4.6. Vision On-Vehicle Test Run June 15, 1993: Straight Test Section Only

4.7 On-Vehicle/Highway Infrastructure Cost-Tradeoffs

Using heavy duty striping material to mark pavements for vision lateral guidance results in a minimum of impact on highway infrastructures. That is, the existing highway infrastructure can be used without construction modifications. Furthermore, the striping can be performed as required without much difficulty.

It is anticipated that using Very Large Scale Integrated Circuit(VLSI) and Application Specific Integrated Circuit(ASIC) technologies that the vision subsystem(excluding a computer that would coordinate information from other sensors and communication sources) would, in volume, cost in the neighborhood of $500 to $800.

4.8 Summary

A vehicle has been successfully laterally controlled using vision at speeds up to 29.06 m/s(65 mph) without using curve-preview, although it would be desirable to have curve-preview. However, traveling at high speeds and at short distances between vehicles, curve-preview may not be possible.

Portions of the vision technology are being transferred to the design and implementation of an autonomous Shadow Maintenance Vehicle that tracks and follows a Lead Maintenance Vehicle. Shadow Vehicles are used to protect freeway workers and maintenance vehicles during maintenance operations.

5. PASSIVE WIRE

5.1 Theory and Block Diagram

The passive wire vehicle guidance system concepts of this research were developed from earlier active wire experiments that were performed in Japan and elsewhere [1,2]. A number of different passive wire arrangements have been tested to some degree. Very early, California State University, Sacramento(CSUS) evaluated a passive version of one of the active wire systems that had been used previously. It was intended that a wire should be placed down the center of a traffic lane with wires attached to it at both ends that would be used to apply an external voltage in the active wire system or to complete a circuit loop in the passive case. It was tempting to postulate that the portion of the wire loop not placed down the center of a traffic lane would be so far away from the traffic lane that its effect on the current induced in a sensing coil would be negligible compared to the effects of currents in the wire placed down the center of the traffic lane. This hope was not borne out by the experiment; sensing coils that should have had a null of induced voltage when located symmetrically with respect to the wire placed down the center of a traffic lane showed null for a large lateral displacement measured from the center of the traffic lane. Hence, this geometry was discarded.

The next idea evaluated used a center traffic lane wire, without closing the loop. This resembles a traveling wave antenna. It developed that while the idea was feasible in principle, the currents excited, at higher frequencies near 1 MHz, were almost undetectable by sensing coils.

Eventually, an early version of the present geometry was developed and tested. The arrangement of the various wires and coils is shown schematically in Figure 5.1.

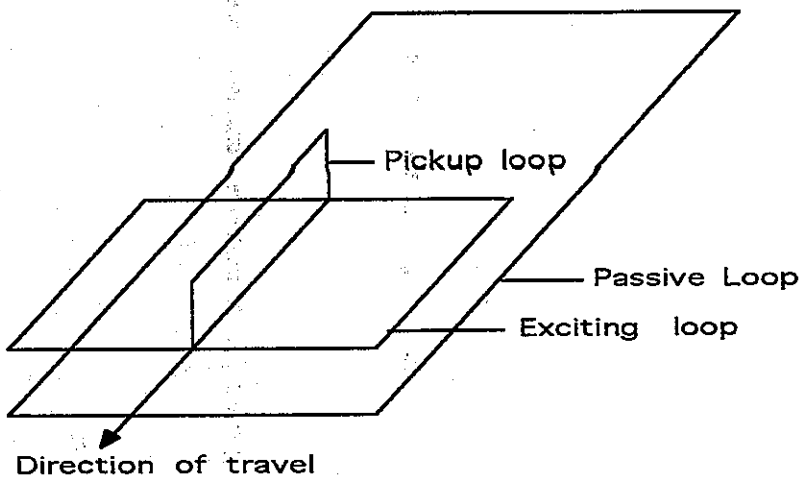

Fig. 5.1. Geometry of Passive Loop, Exciting And Pickup Coils

The theory of operation is based on the general formulation of mutual inductance between circuits, originally stated by von Neumann and enunciated more recently by Ramo, Whinnery and van Duzer [12]. The passive loop shown is but one of a succession of identical loops, which are laterally centered within a traffic lane, adhered to the road surface for the purpose of these experiments.

The exciting loop shown represents just one of the many turns of wire in a horizontal coil that is mounted on the car. It excites currents in the passive loop through mutual inductance, that may be considered to exist between all wires that are parallel to each other. The pickup coil is rigidly mounted perpendicular to the exciting coil to null any mutual inductance between the pickup coil and the exciting coil. Hence, voltages induced in the pickup coil result from mutual inductance between the passive loop and the pickup coil as there is negligible mutual inductance coupling between the exciting coil and the pickup coil. At any given instant of time, current in the longitudinal (along the road) sides of the passive loop are in opposite directions, hence tending to excite opposing voltages in the pickup coil.

When the pickup coil is centered in the passive loop, the net voltage should be zero because of perfect cancellation of contributions from the two wires. When the pickup coil is shifted from the center line of the passive loop, the polarity of the induced voltage depends upon the side of the wire it is nearest to. Thus, phase of the induced voltage contains left-right information, and detection of this phase provides the error signal needed for steering corrections.

A basic block diagram of the first system is illustrated in Figure 5.2. It was expected at the beginning that the presence of automotive ignition noise and other corruption's to the error signal would necessitate a certain amount of filtering; an augmented system will be shown in a later section of the report.

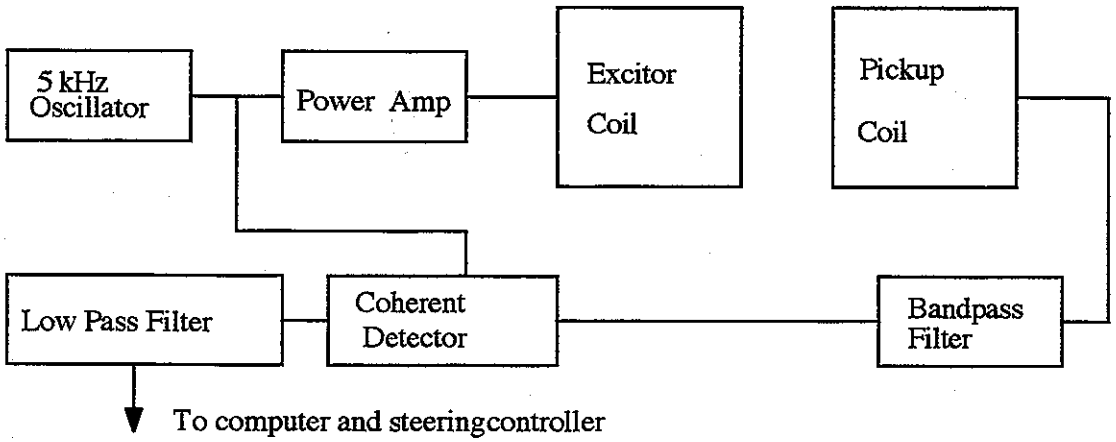

Fig. 5.2. Basic Block Diagram of Passive Wire System

5000 Hz was chosen as a compromise for the oscillator frequency, being high enough that the coil impedances were dominated by inductive reactance and yet being low enough to limit capacitively induced voltages. Experience has shown, however,

that capacitively induced voltages are very plentiful, especially noise voltages. The necessary solution arrived at, which will be discussed in more detail in a later section, was to completely shield the coils electrostatically.

Another exciting coil frequency could have been chosen if 5000 Hz was also the center of frequency of the range of electrical noise induced in the pickup coil by the engine. A tape recording was made of the noise voltage produced with the engine running. The tape recorder was connected to an audio spectrum analyzer. The frequency spectrum of the recorded engine induced noise voltage in the pickup coil is shown in Figure 5.3.

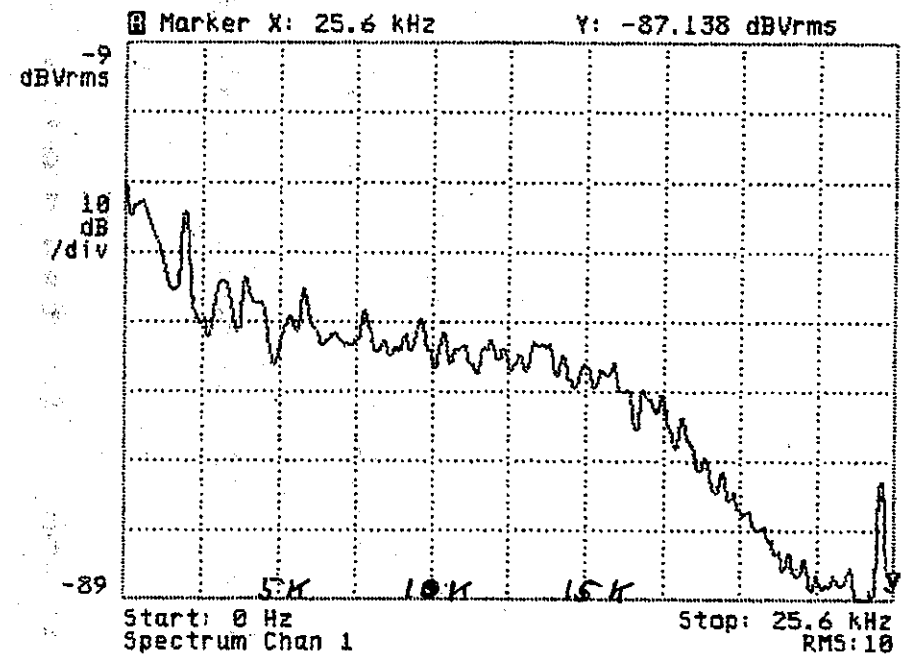

Fig. 5.3. Distribution of Engine Noise Power vs. Frequency

It can be seen that the distribution of noise power is relatively constant over the range of frequency up to 15,000 Hz. Indeed, it is probably uniform to higher frequencies; higher frequencies could not be tested due to the limitations of the tape recorder.

With the oscillator signal connected to the exciting coil, an appropriate 5000 Hz error signal was picked up and passed through a bandpass filter to remove some of the engine noise. The filtered signal is sent to the coherent detector. Also sent to the coherent detector is a sample of the original oscillator signal. It should be recalled that when two signals of the same frequency are sent to a coherent detector, the output is a dc voltage proportional to the cosine of the phase angle between the two inputs plus a double frequency signal of 10,000 Hz that is removed by a low pass filter. When the detector coil is to one side of the center of the passive loop, the voltage picked up is in phase with the oscillator signal, whereas on the other side of center, the signals are 180 degrees out of phase. Thus, the

output of the coherent detector is positive on one side of the passive loop center and negative on the other with an anticipated region of smooth variation between the extremes of lateral displacement. With the engine not running, acceptable curves of error voltage vs. lateral displacement are obtained, as seen in Figure 5.4.

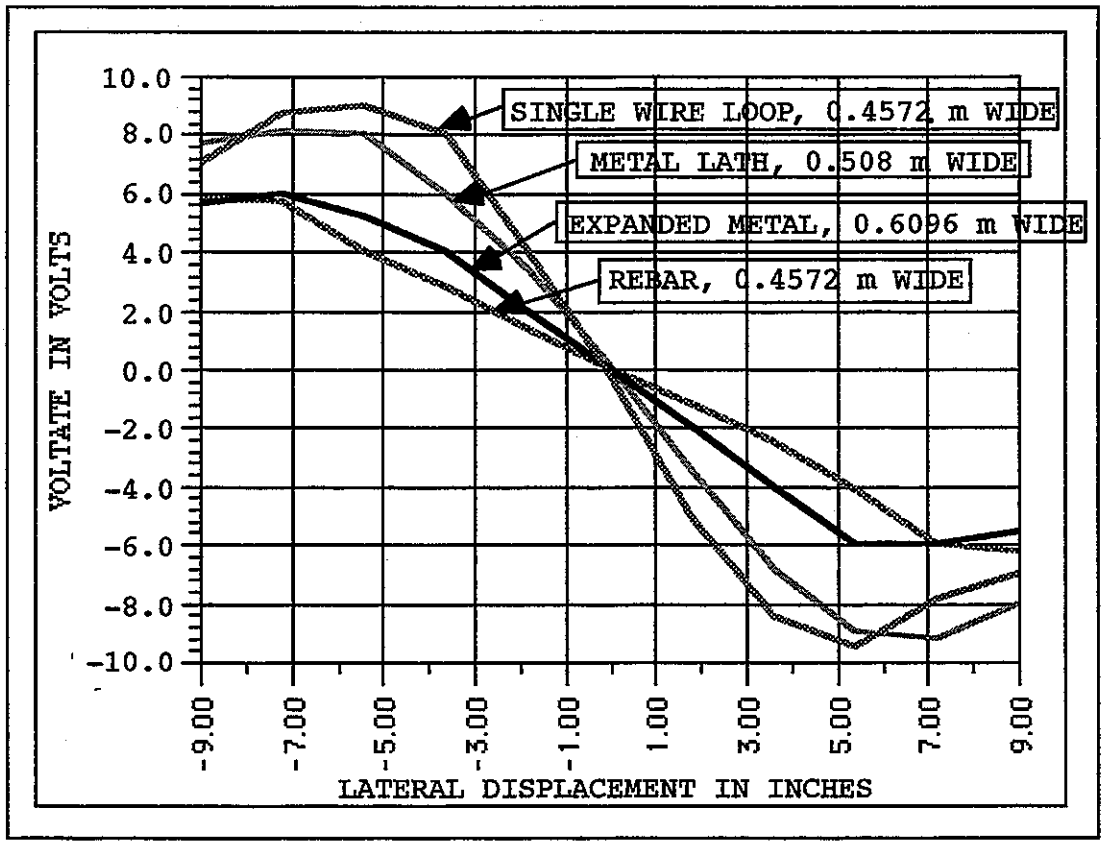

Fig. 5.4. Error Voltage vs. Lateral Displacement For Several Passive Materials

The topmost curve in Figure 5.4 was obtained with a simple single wire passive loop, 1.22 m(4') long and 0.4572 m(18") wide. It can be seen that voltage vs. lateral displacement is quite linear until the edges of the exciting coil approach the edges of the loop.

A number of tests attempted to discover limitations on the conductance of the passive loop. All results indicated that the higher the conductance, the higher the detected voltage, and indeed, it was permissible to increase current flow by providing multiple loops, as long as the sides of the passive structure were parallel. Thus, very good signal pickup was obtained with a solid sheet of aluminum foil, expanded metal sheets, a mesh form of "rebar"(used to reinforce concrete construction) and a similar structure to "chicken wire", used to reinforce sheetrock. Working down from the topmost curve, the other curves present error voltage vs. distance for a 0.508 m(20") wide section of the metal lath (resembling fine chicken wire), a 0.6096 m(24") wide section of expanded metal, and a 0.4512 m(18") wide section of rebar.

Error voltage vs. distance is satisfactorily linear for all samples. It should be noted that no effort was made to make absolute voltage comparisons among the samples; however, voltage sensitivity of all the later samples was greater than the simple loop. Thus, if an extensive installation is made applying these results, one may choose the passive material on the basis of material installation costs. It is also noticeable that there is a greater region of linear distribution of voltage for the wider sections of passive materials. This indicates that a test installation with wider sections of passive material would provide a greater range such that lateral displacement from the center of a traffic lane could be sensed and controlled.

5.2 Location of Passive Wire Sensor

The coils are mounted at the front of the vehicle, between the radiator and the grillwork. The coils are connected to balanced shielded cables. The other end of the shielded cables are connected to the electronics in the passenger compartment. Figure 5.5 is a photograph of the coils before mounting on the vehicle. Figure 5.6 shows the location of the coils on the test vehicle.

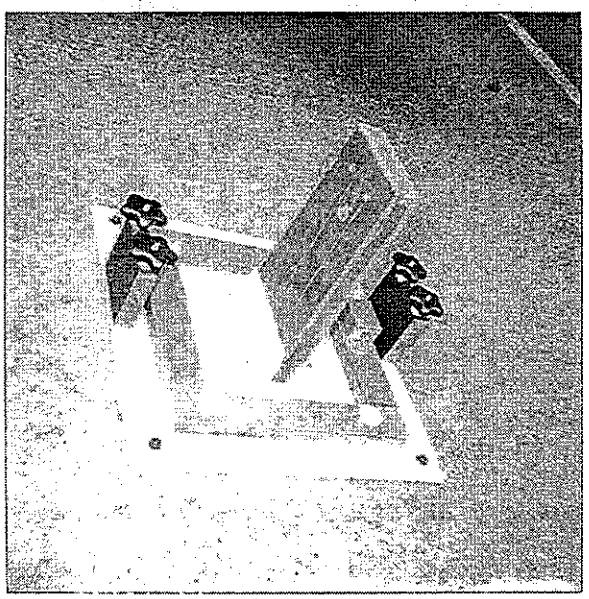

Fig. 5.5. Coils Before Mounting on the Vehicle

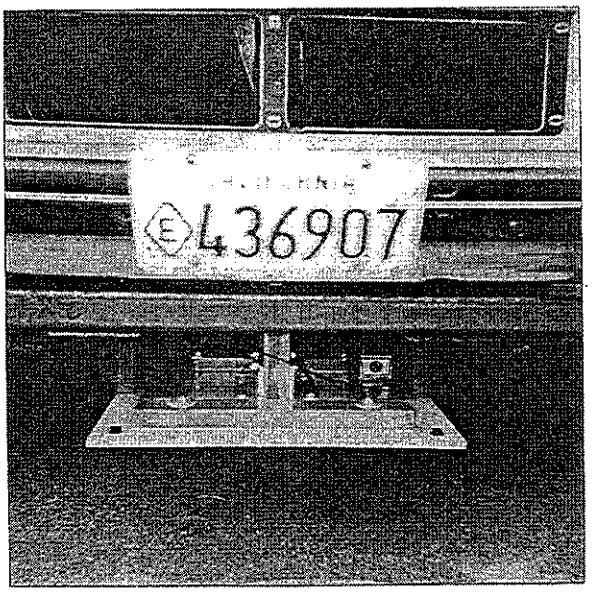

Fig. 5.6. Coils Mounted on the Test Vehicle

5.3 Evolution of Coil and Hardware Design

The original coils were wound on wooden forms that were specifically sized to facilitate mounting the pickup coil in front of the radiator. While the coils were wound as tightly as possible, it was found that the shifting of a single wire in the top layer was sufficient enough to eliminate a null or produce a false one. Thus, in the second generation coil, each layer was glued down. However, there remained vexing problems. Some flexibility was provided in mounting the coils on the test vehicle to allow for small adjustments of the pickup coil could be done to null out the mutual inductance between exciting and pickup coils. This was always a frustrating experience, as the exact adjustment for minimum unwanted mutual seemed to vary greatly between tests. It was eventually concluded that the anomalous results came from unanticipated capacitively induced voltages. Hence, the third generation coils were wound to allow for complete electrostatic shielding of the coils. The coils were enclosed in a soldered copper sheet with only enough of an interruption in one place to prevent direct current from flowing in the shield.

Extensive use was made of high quality phenolic plastics , first in making coil forms, then in fabricating the coil mounting structure. As a result, the coils are very stable in individual electrical characteristics and mutual inductance seems well controlled.

The early exciting coil had heavy gauge wire that could carry a large current, but needed to be driven by a power amplifier with high current capability. The present version contains more turns of smaller wire, wound tightly, and can be driven by one power transistor. Signals were at initially sent to and from coils using coaxial cables. Careful analysis of what caused problems showed that there were numerous mechanisms for inducing voltages in the coils capacitively, leading to a rather low signal to noise ratio, that could not be remedied simply by filtering. Wiring was changed to a two conductor, balanced shielded cable in addition to the coils being shielded electrostatically, as described above.

After the electrostatic shielding, there still remained very significant amounts of magnetically-induced noise. Figures 5.7 and 5.8 are spectral plots of the signal and the noise, with the engine off and the engine running. With the engine off, a strong signal is apparent, more than 50 decibels above the background noise level. However, with the engine running, the overall noise level rises markedly. Probably a greater threat to the experiment is that there seems to have arisen a new periodic noise, that is picked up. It was found to have a frequency proportional to engine speed, with at least one of its harmonics of such a frequency as to coincide with the 5000 Hz signal.

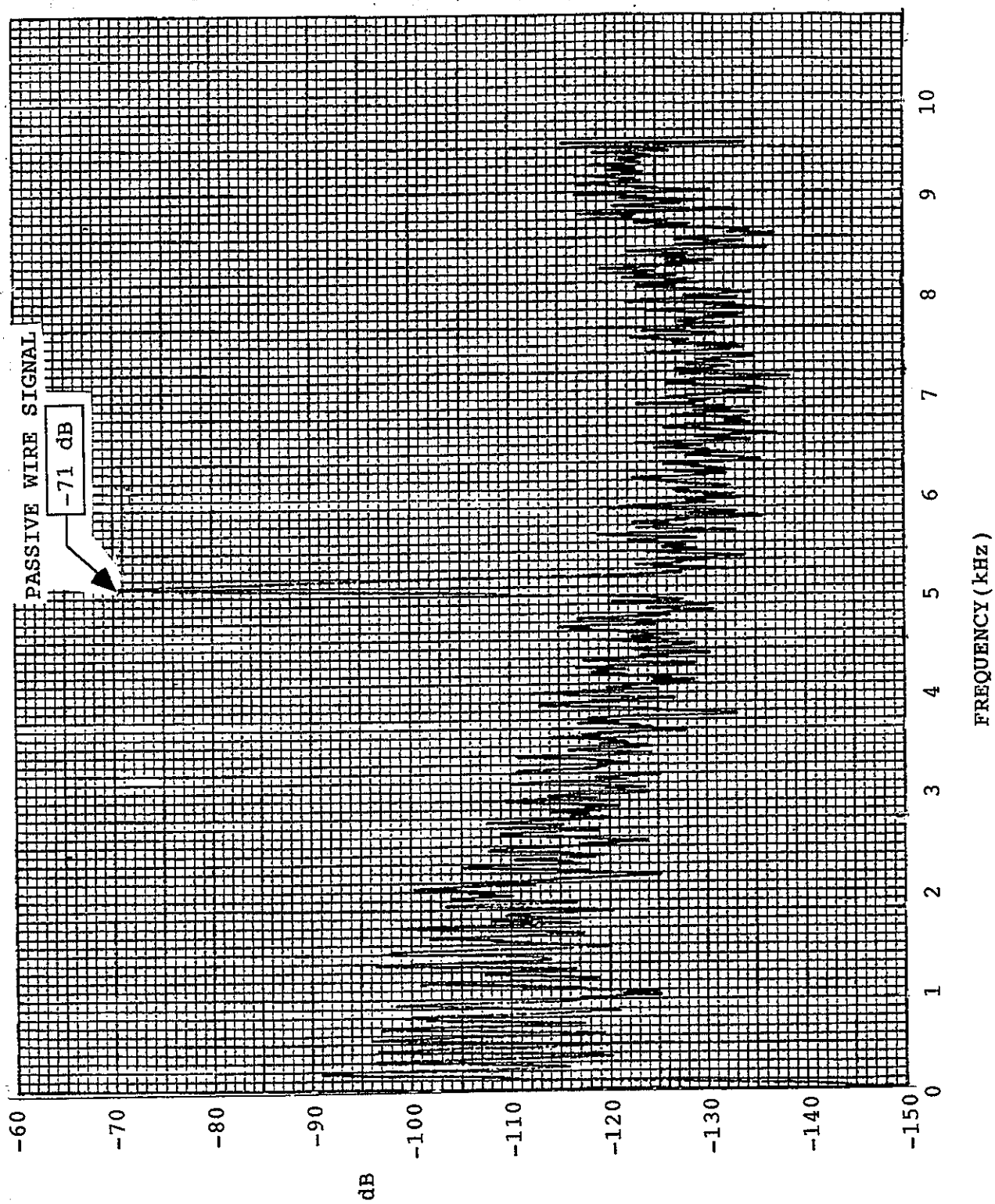

Fig. 5.7. Signal and Noise Frequency Spectrum-Engine Off

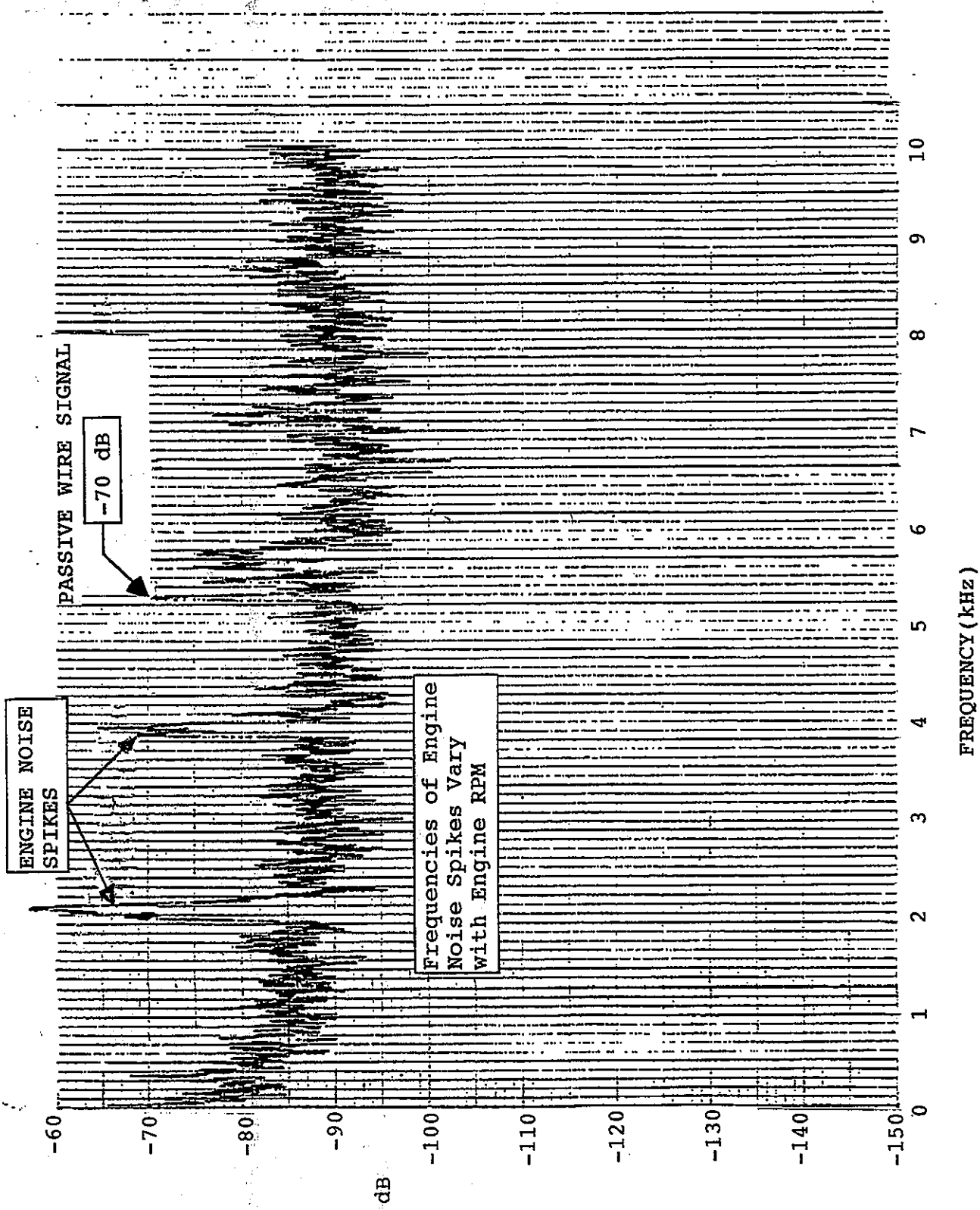

Fig. 5.8. Signal and Noise Frequency Spectrum-Engine On

An examination of the signal being picked up here led the way to further signal-processing changes. It was decided to design more effective, switched capacitor filters. Measurement of the signals being few to the coherent detector showed them to be almost 90 degrees out of phase, which of course drastically reduced the sensitivity of the coherent detector. Thus, circuitry has been added to adjust the phase of the signal sent to the oscillator to bring it more closely in phase with the picked up signal. These modifications are among those depicted on the current detector circuit schematic, Figure 5.9.

In the first tests of the magnetic circuits, the signal source being used was a laboratory signal generator. The first design for a dedicated on-board oscillator used a Wien bridge circuit. Amplitude stabilization of the Wien bridge circuit was attained through use of non-linear resistor techniques, plus a slight increase in nominal feedback circuit gain.

The first designs for the bandpass and low pass filters were conventional ones using appropriate feedback circuitry with operational amplifiers. The exact center frequency being filtered, and hence the phase of the output signals seemed to experience instability. The problem was solved by designing high performance switched capacitor filters.

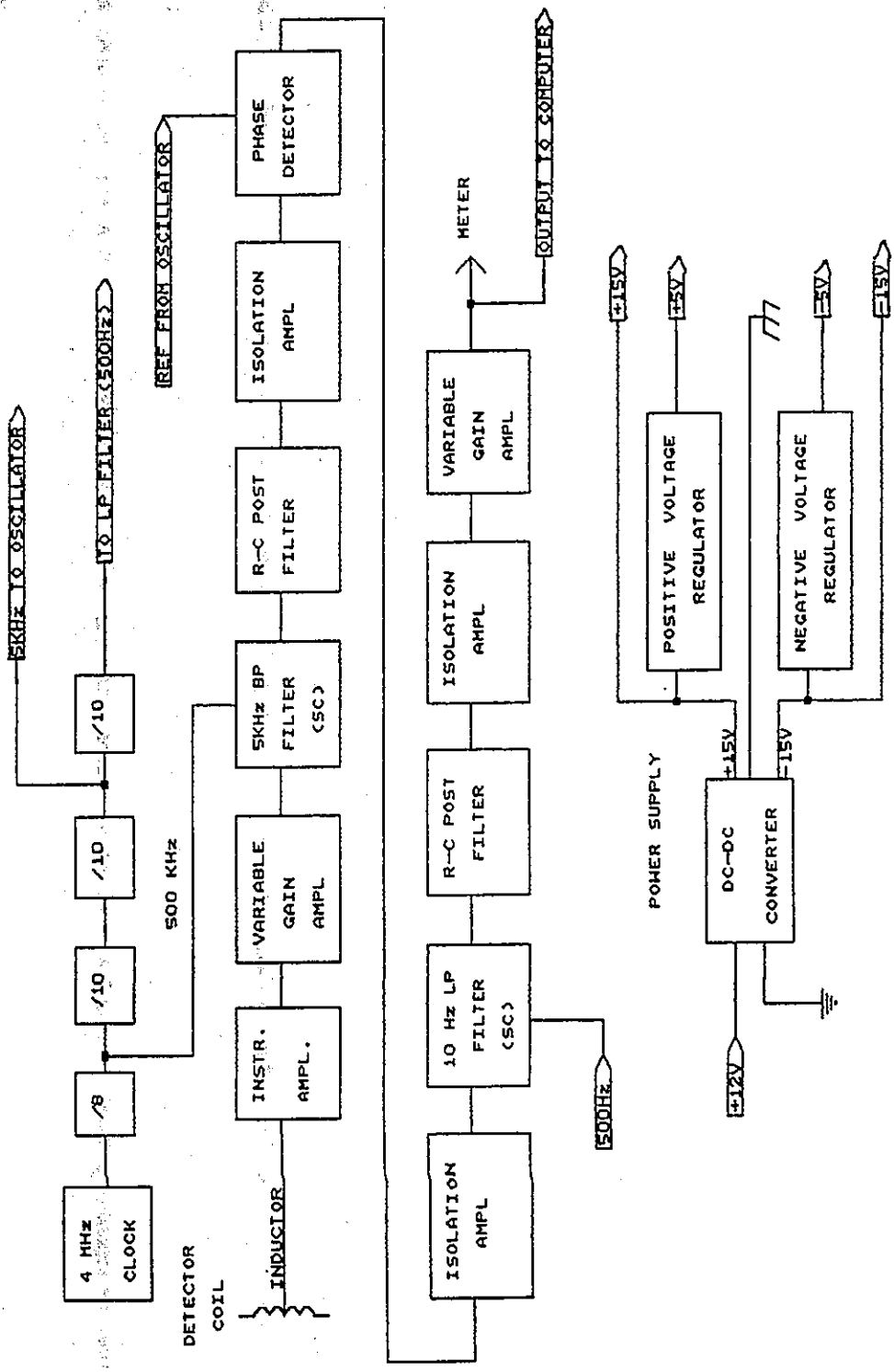

Fig. 5.9. Detector Circuitry Schematic

5.4 Evaluation of Reference Design

Because a number of configurations might be as effective as a passive wire loop and perhaps more easily installed, laboratory tests were made of error voltage(See Figure 5.4) using the materials discussed in Section 5.1 . The first set of coils were used to excite currents in the passive wire materials. The induced voltage was picked up by the pickup coil and sent to the phase detector to generate an error voltage. Note that the measurements were not set-up to show the relative sensitivity of error voltage generated in each material, but were set for the same maximum in each test. A sheet of metal foil was found very effective, but was not tested extensively because of difficulty in obtaining a large sheet.

Only enough measurements were taken to demonstrate that the null in error voltage near the center of the sheet was present and that behavior was smooth and essentially linear on either side of the null. There were also measurements recorded near the junction of two passive loops placed end to end. An expected drop in error voltage near the ends of loops was observed. The drop in error voltage occurs over a small longitudinal (along the loop) distance of a little over 3 centimeters. One can expect at drop in voltage since the voltages induced by currents in the loop that the pickup coil is farthest from will tend to cancel signal from the nearest one. This effect is illustrated in Figure 5.10. Figure 5.10 illustrates that the drop in error voltage near the junction of two passive wire loops is a mild effect that does not extend over a large longitudinal distance.

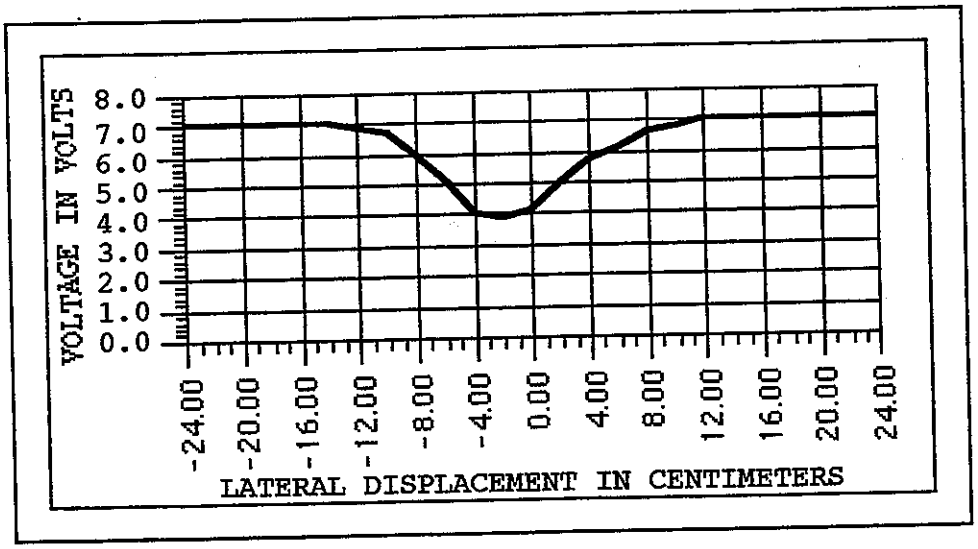

Fig. 5.10. Drop of Signal Near the Junction of Two Passive Wire Panels

As can be seen in Figure 5.10, the drop in voltage pickup is less than 50%. The longitudinal units on that graph are in centimeters. The maximum depression of the error voltage signal occurs only over a distance of three centimeters. This effect is filtered by the lateral guidance control system and has not posed a problem for the steering control system.

The first passive wire test track section was made of two stretched heavy gauge copper wires with crimped on cross-pieces, this proved insufficiently durable for extended use. Rebar, a 0.1524 m(6") gridded structure used for reinforcing concrete construction, was used to construct the 402 m(1/4 mile) test track that was used for the vehicle test runs.

5.5 Test and Diagnostic Equipment Constructed.

A simple pickup coil with electronics to sense the magnetic field generated by an excited passive wire loop was designed and constructed. This test box was used to validate basic concepts and in testing the passive wire configurations noted in Figure 5.4.

An signal generator was designed and constructed to make it possible to send a dc voltage between +5 volts and - 5 volts into the computer to simulate a passive wire error signal voltage and test the digitizing process. With small adjustments of computer software, it was found possible to have the computer obtain reliable digitized samples of the simulated error voltage signal.

5.6 On-vehicle Tests

A 402 meter(1/4 mile) test section consisting of straight and curved sections was placed down using strips of rebar 0.762 m(2.5 ft) by 1.8288 m(6 ft). Following in Figures 5.11 through 5.14 are sample test runs with speeds from 2.24 m/s(5 mph) to 13.41 m/s(30 mph). The upper plots in Figures 5.11 through 5.14 are the steering angular rate command in radians/second versus time in seconds. The lower plot is the vision sensor lateral displacement in meters versus time in seconds.

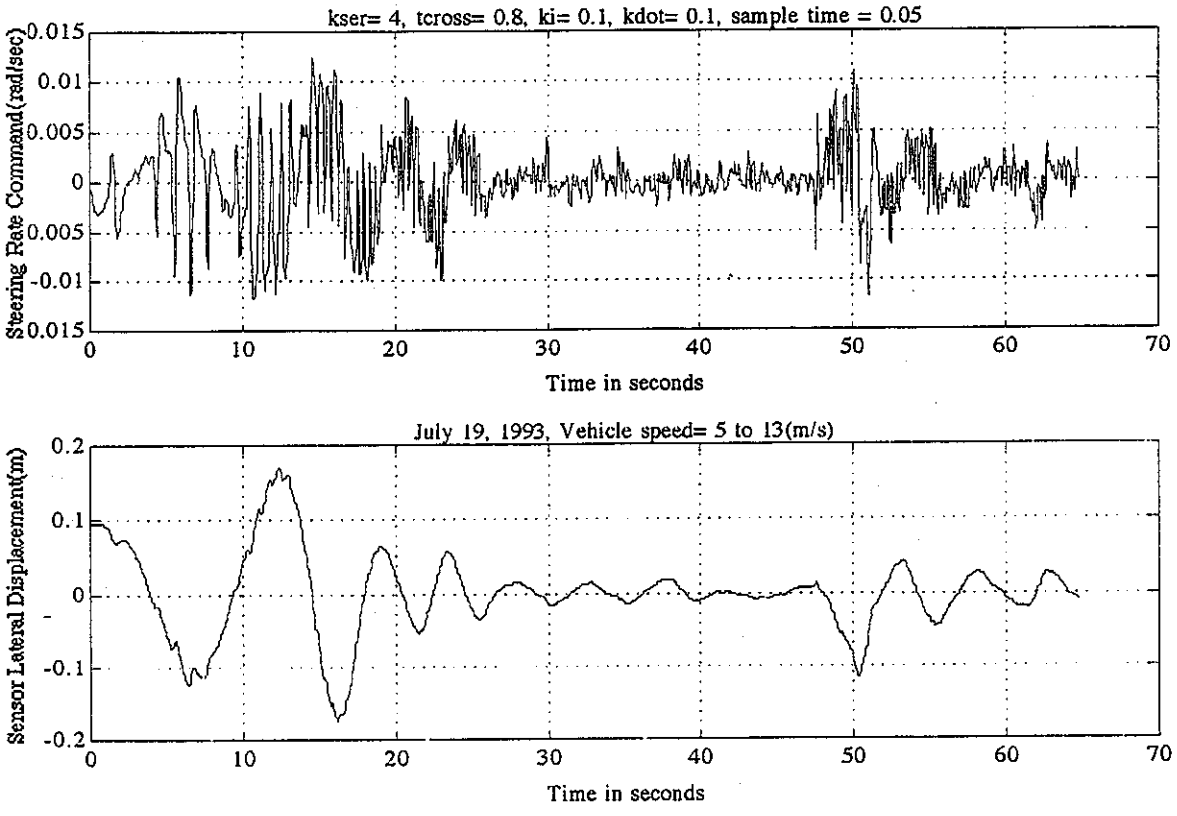

Fig. 5.11. Passive-Wire On-Vehicle Test Run July 19, 1993: Straight to Curve Test Sections

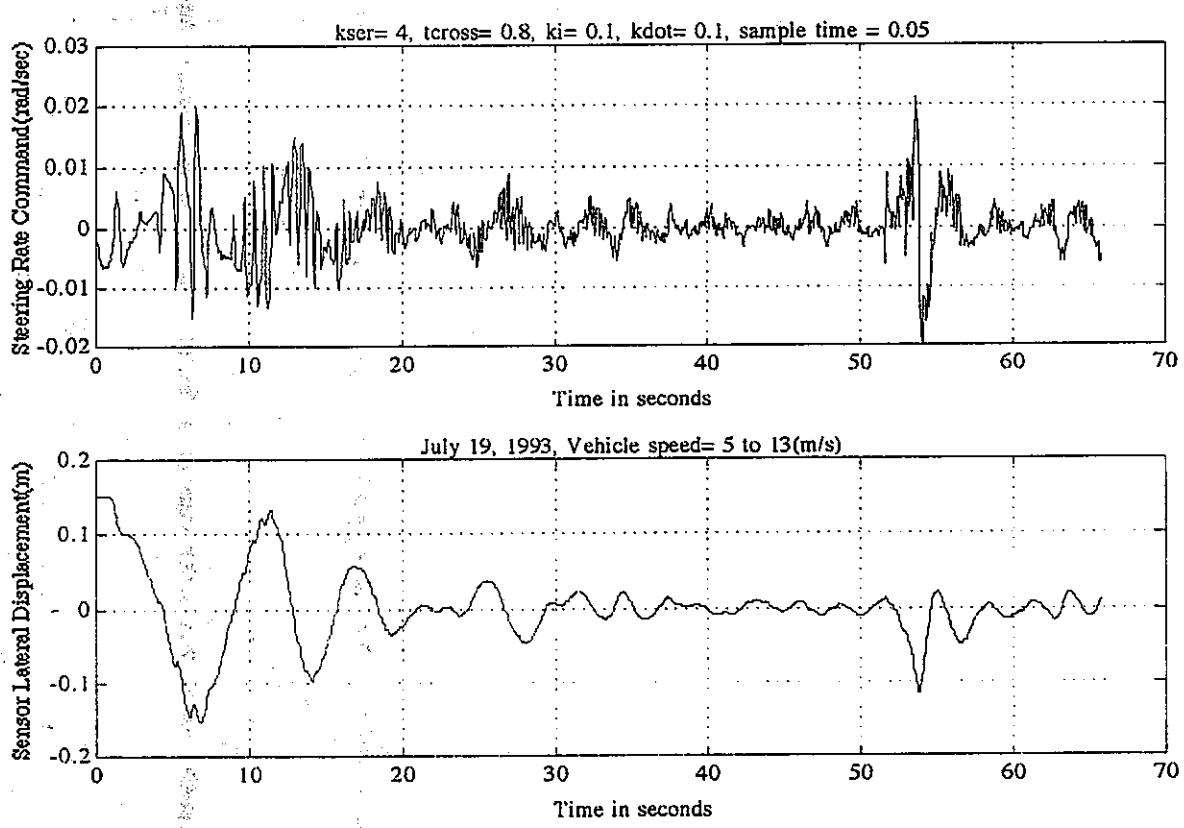

Fig. 5.12. Passive-Wire On-Vehicle Test Run July 19, 1993: Straight to Curve Test Sections

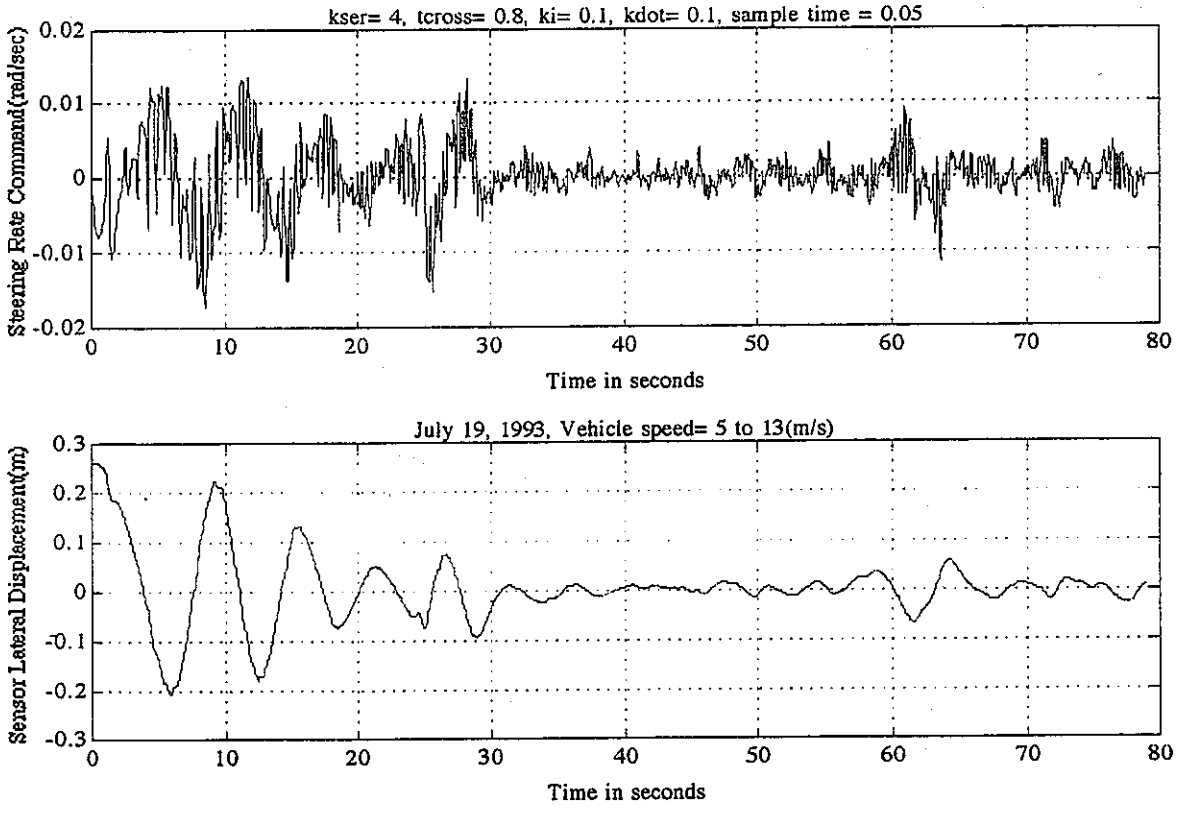

Fig. 5.13. Passive-Wire On-Vehicle Test Run July 19, 1993: Curve to Straight Test Sections

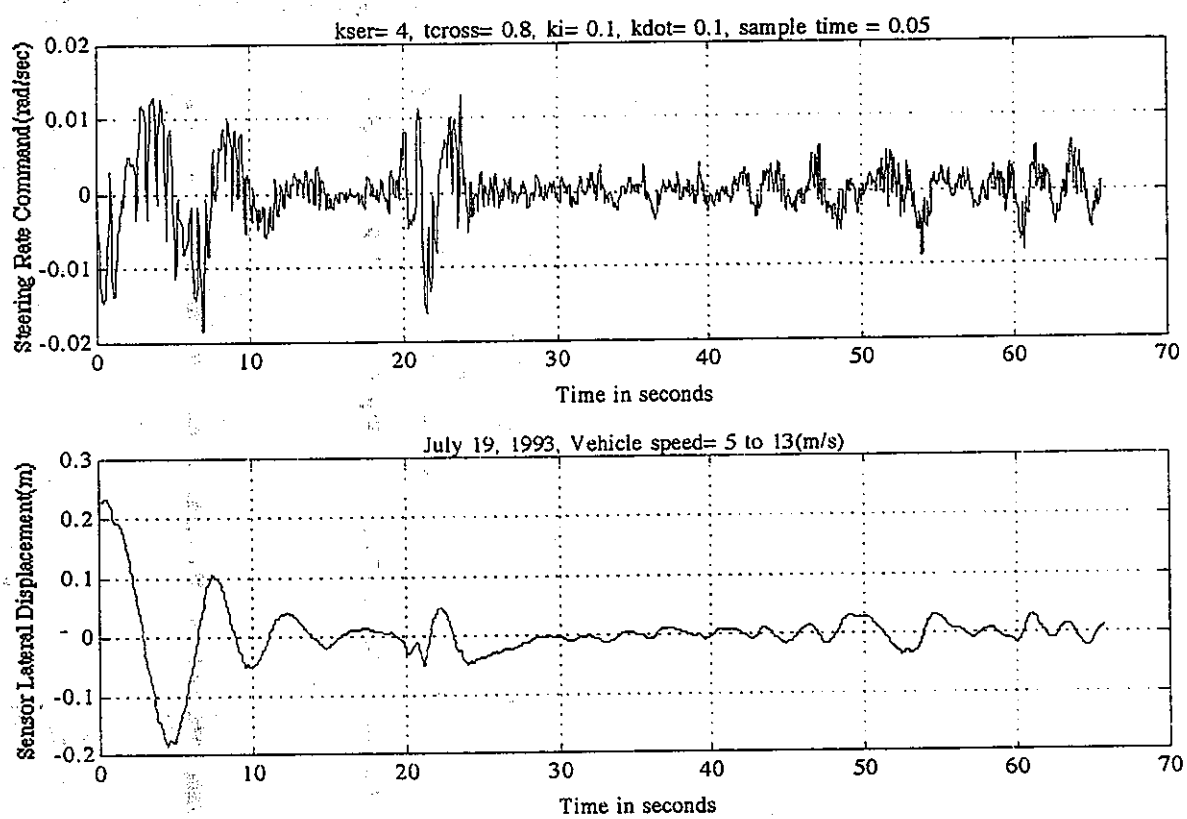

Fig. 5.14. Passive-Wire On-Vehicle Test Run July 19, 1993: Curve to Straight Test Sections

5.7 On-Vehicle/Highway Infrastructure Cost-Tradeoffs

It is estimated that the consumer cost of the Passive Wire Module would be in the order of $400 when considering a large number of units. The reference, consisting of wire embedded in the pavement, will be more costly to install than either the reference for the Vision Module or the reference for the Radar Module. Furthermore, it will be more costly to remove and relocate the buried wire reference for the Passive Wire Module as compared to removing and relocating the references for Vision and Radar.

As pointed out earlier, the passive wire needs to be embedded in the roadway only as deeply as necessary to ensure stationary placement of the wire in the road.

5.8 Summary

A vehicle has been successfully laterally controlled using a passive wire approach at speeds up to 17.88 m/s(40 mph) without using curve-preview, although it would be desirable to have curve-preview. However, traveling at high speeds and at short distances between vehicles, curve-preview may not be possible.

The power output of the transmitting coil needs to be increased from 1 to 2 watts to raise the received signal sufficiently above the engine noise. The engine noise increased as a function of rpm of the engine. Greater speeds can be achieved if the transmitting power is increased.

6. RADAR MODULE

6.1 Circuit Diagram and Theory of Operation

Figures 6.1 through 6.4 present the schematic diagram of the circuit for the radar module. As shown in Figure 6.1, the schematic uses a radar module to transmit a 24 GHz signal on to the road and striping material which is then reflected to two receiving antennas. The dc output has a variable gain stage before being input into the A/D converter. More details on the transmitter module are shown in Figure 6.2. Figures 6.3 and 6.4 are schematics of the internal receiver module while Table 6.1 presents a list of parts showing small volume component cost. The two receiver configuration was chosen based on cost and availability of parts and because of difficulty with the phase measurement initially attempted with one receiver. The dc signal from the two receiving antennas is digitized and a relative comparison of amplitude provides the left-right stripe tracking information to be sent to the steering control circuitry. Figure 6.5 is a simulation of the anticipated receiving horn responses. Not shown, but designed in an earlier phase is a signal feedback system to adjust for drift in the transmitted signal to ensure the receivers track the transmitter.

The module has been evaluated on the Sacramento test track and provided a dc output signal between ± 3 volts at a height of 0.03048 m(12") with 20 dB of attenuation inserted (see pictures enclosed). If the height is adjusted to 0.6096 m(24") to provide a wider lateral scan, the attenuation can be decreased such that the signal level remains the same. The current signal to noise ratio exceeds 10 dB.

Originally, the intent was to FM modulate a 31 GHz source at 500 MHz to track lateral displacement up to 0.15424 m(6") on each side of a nominal width stripe. Unfortunately, a Gunn source at 31 GHz could not be modulated at this high frequency. It would be necessary to up convert a lower 500 MHz modulated signal which becomes a more expensive option. The current design at 24 GHz should accomplish the same goal at a much lower cost. A comparison of the received signal amplitudes from each of the horns provides the control signal to the steering module. Modulation can be added at a later date to improve sensitivity if necessary.

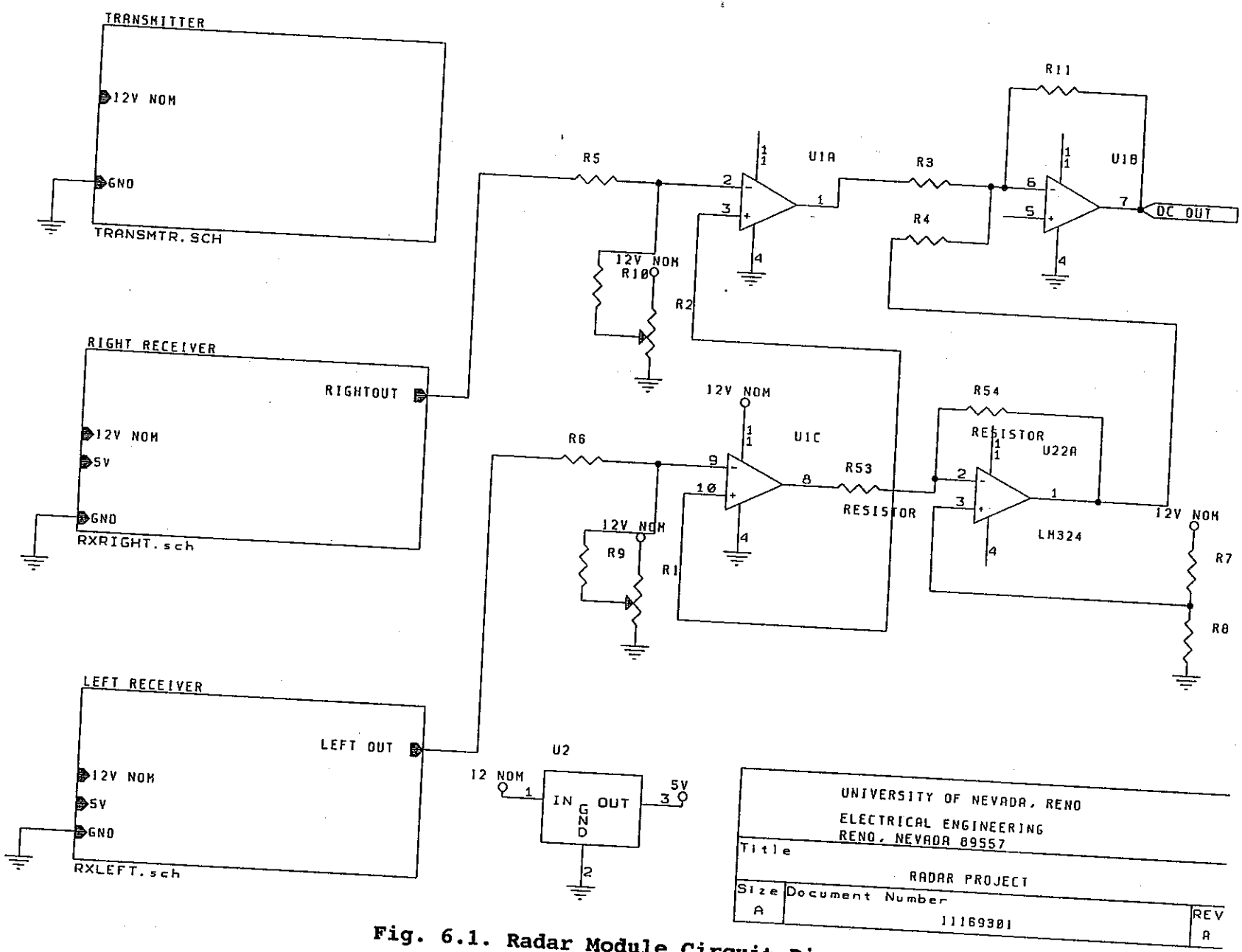

Fig. 6.1. Radar Module Circuit Diagram

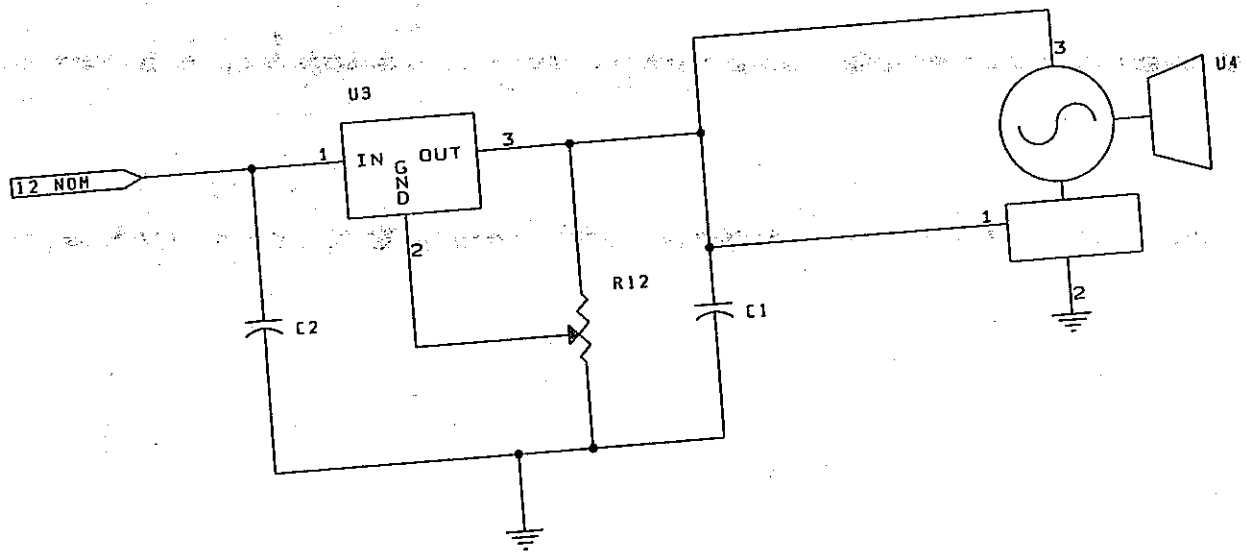

UNIVERSITY OF NEVADA, RENO
ELECTRICAL ENGINEERING
RENO, NEVADA 89557

Title: RADAR PROJECT

Size: A | Document Number: 11169301 | REV: A

Fig. 6.2. Radar Trasmitter Module

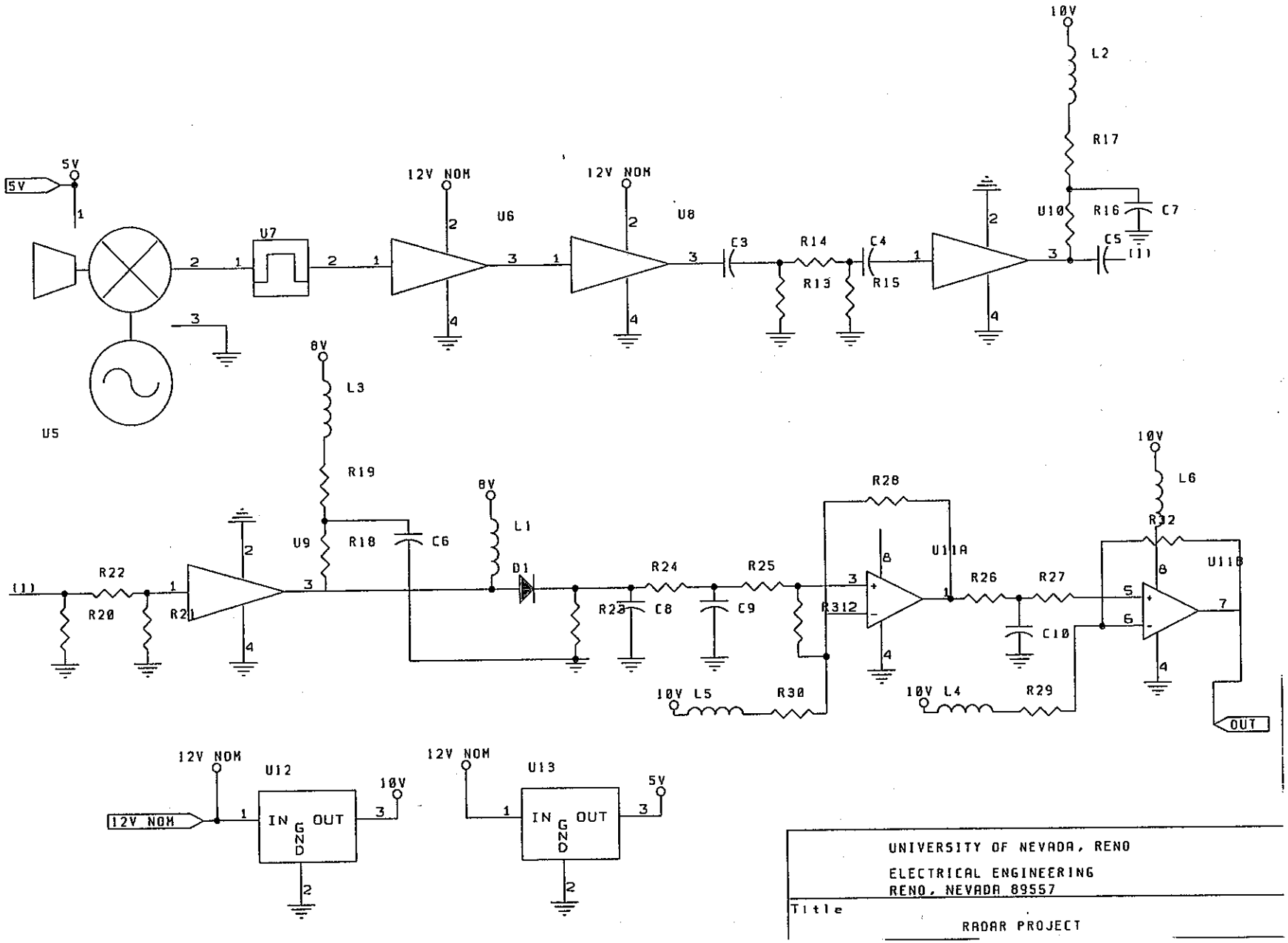

Fig. 6.3. Receiver Horn #1 Schematic

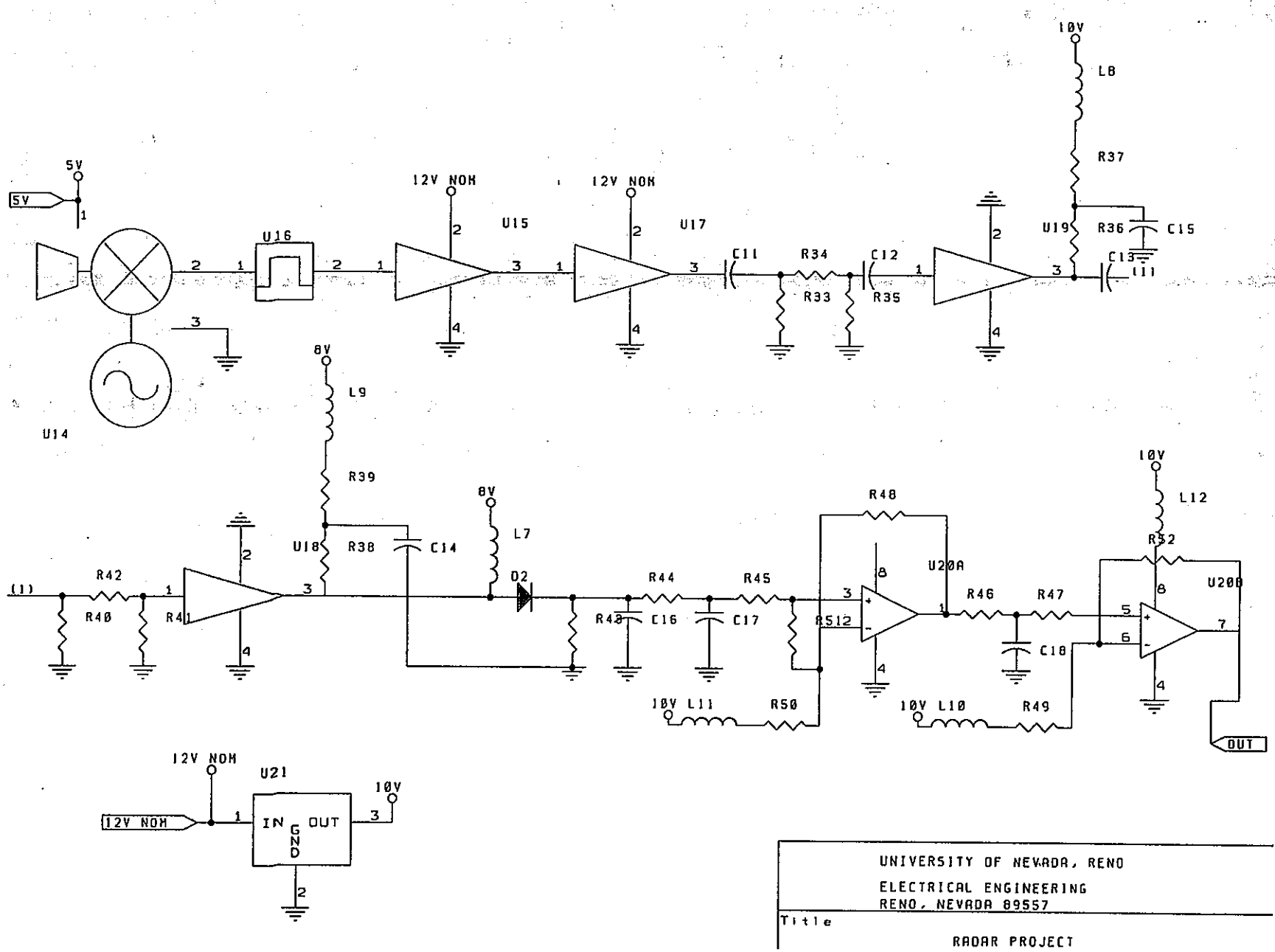

Fig. 6.4. Receiver Horn #2 Schematic

Table 6.1

RADAR PROJECT
11169301
Bill Of Materials

Revised: November 16, 1993
Revision: A

November 16, 1993 1:36:07 Page 1

Item	Quantity	Reference	Part		
1	18	C1,C2,C3,C4,C5,C6,C7,C8, C9,C10,C11,C12,C13,C14, C15,C16,C17,C18	CAP	.25	4.50
2	2	D1,D2	DIODE	1.80	3.20
3	12	L1,L2,L3,L4,L5,L6,L7,L8, L9,L10,L11,L12	INDUCTOR	1.00	12.00
4	3	R1,R2,R12	RESISTOR VAR	3.55	10.65
5	49	R3,R4,R5,R6,R7,R8,R9,R10, R11,R13,R14,R15,R16,R17, R18,R19,R20,R21,R22,R23, R24,R25,R26,R27,R28,R29, R30,R31,R32,R33,R34,R35, R36,R37,R38,R39,R40,R41, R42,R43,R44,R45,R46,R47, R48,R49,R50,R51,R52	RESISTOR	.06	2.94
6	1	U1	LM324	.89	.89
7	3	U2,U3,U13	LM7805	.59	1.77
8	1	U4	MA87870 INCLUDES HORNS MA86552	350.00	350.00
9	2	U5,U14	MA86870 INCLUDES HORNS MA86552	95.00	190.00
10	8	U6,U8,U9,U10,U15,U17,U18, U19	MAR-1	1.08	8.64
11	2	U7,U16	BPF	14.95	29.90
12	2	U11,U20	LM358	.59	1.18
13	2	U12,U21	LM7810	.59	1.18
14	1	MOUNT	FABRICATED		
15	2	BOX, TERMINALS, BINDING POSTS, SCREWS		50.00	50.00
				TOTAL	666.55

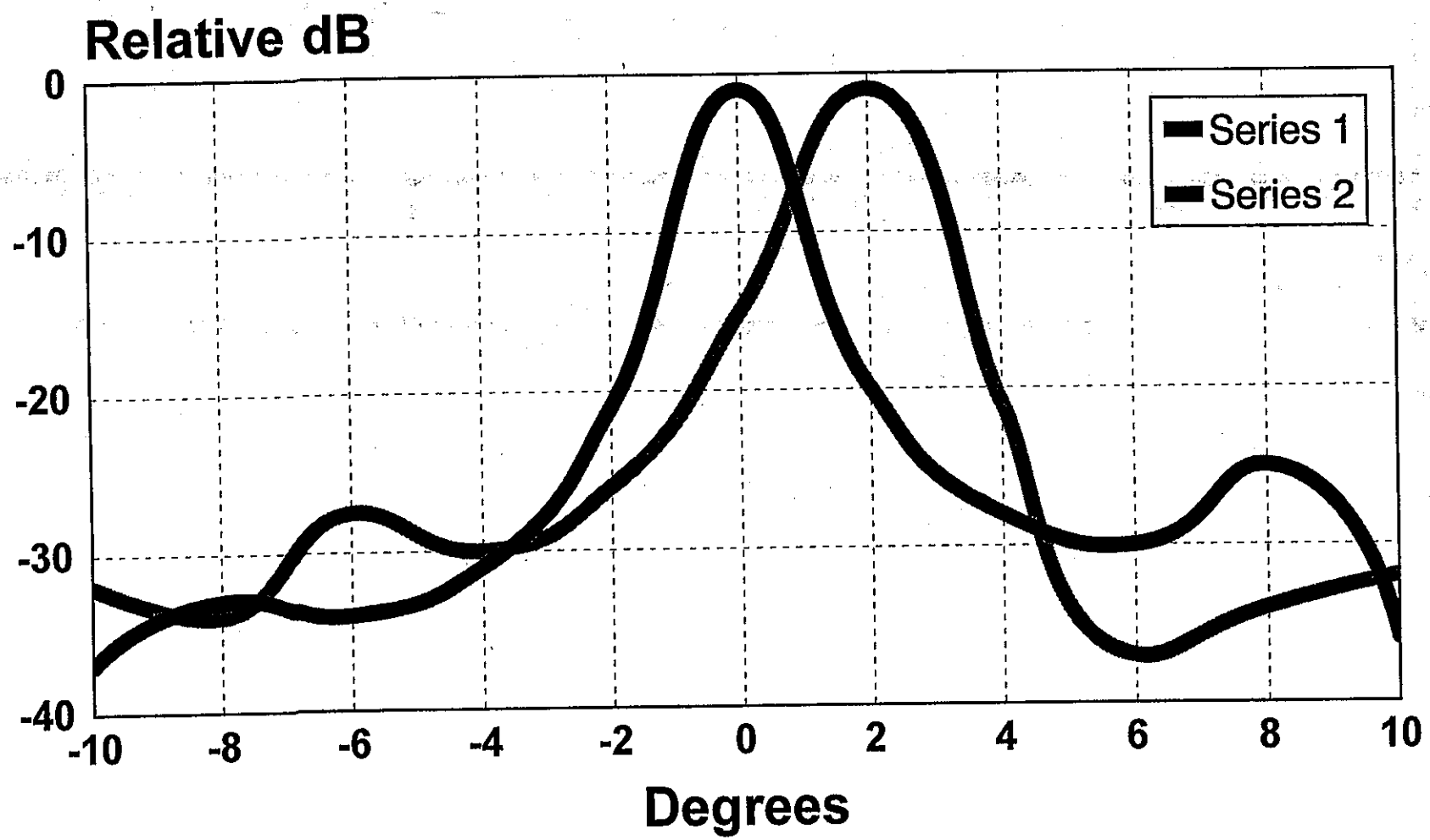

Fig. 6.5. Receiving Horn Responses

6.2 Location on vehicle

The 24 GHz module could be mounted on the vehicle at various locations and only occupies a volume of approximately 0.3048 m(12") by 0.0762 m(3") by 0.1016 m(4"). The space for the electronics can be considerably reduced while the horn spacing probably will have to be retained. A position in front of the vehicle and 24 inches above ground was selected for the initial testing. The steering control subsystem allows installation of the radar module anywhere beneath the vehicle. However, installation of the radar module near the front of the vehicle is preferred to allow early detection of curves in the roadway. The module was mounted on a plate that bolted to the existing holes of the front bumper. This location was chosen to avoid noise and to not interfere with the video camera. The video camera is used to collect data in parallel with the radar module.

6.3 Lateral Reference Material

Initial measurements designed to test the feasibility of the approach used 3 and 6 GHz coaxial probe contact measurements on a variety of paint samples and highway striping material. Using a computer program and a network analyzer, the permittivity of the samples was extracted. The permittivity measurements were then followed up by reflectivity measurements. Typical results are presented in Figure 6.6. The data indicated that there should be enough difference in the reflectivity between the permittivity of asphalt and some of the paints or striping material to detect a good differential signal. Aervoe-Pacific of Gardnerville, Nevada assisted, without charge, in fabricating a variety of high titanium dioxide and high aluminum content paints. The contact measurements with the paints provided the justification to continue on to microwave reflectivity measurements.

Following up on the data in Figure 6.6, Figure 6.7 provides the same data on a relative scale with concrete as the reference. It should be noted that both concrete and asphalt provide comparable results. The concrete sample is flatter and hence easier to use in the measurement setup. Based on Figure 6.7 we selected the Avery striping (#13) and 3M striping (#9 or #10) as good candidates for using on the test track. 3M donated a one-third mile of striping for evaluation, and this has been installed on the test track.

Sample Identification

#1 Concrete
#2 Glass Epoxy Substrate Board
#3 Titanium Dioxide 60% by weight
#4 Caltrans Yellow
#5 Caltrans Black
#6 Caltrans White
#7 Aluminum 50% by weight
#8 Aluminum metal
#9 3M 5160 Temporary Striping
#10 3M 321 Temporary Striping
#11 NDOT Temporary Striping
#12 3M 5710 Temporary Striping
#13 Avery Temporary Striping

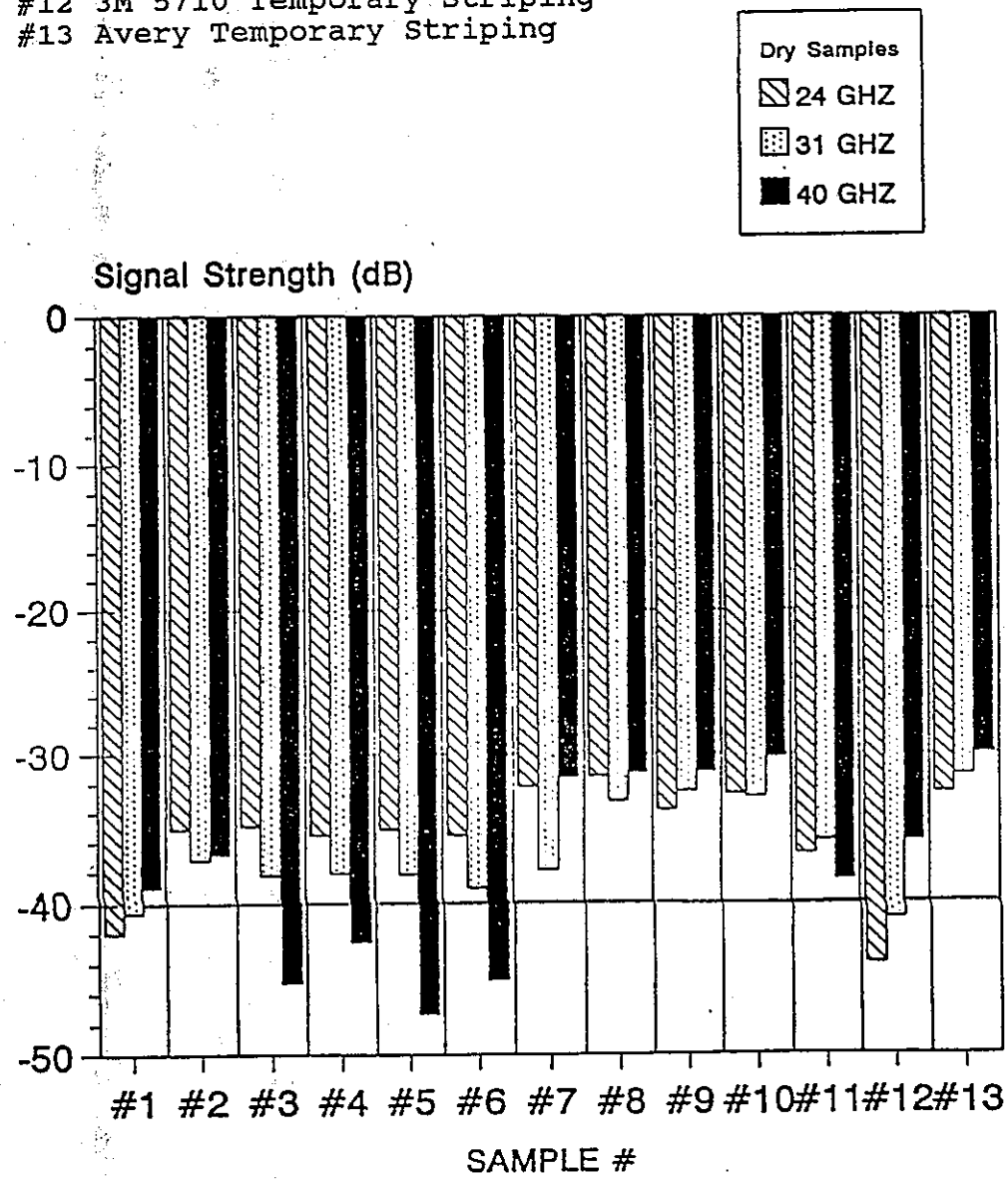

Fig. 6.6. Reflectivity Measurements

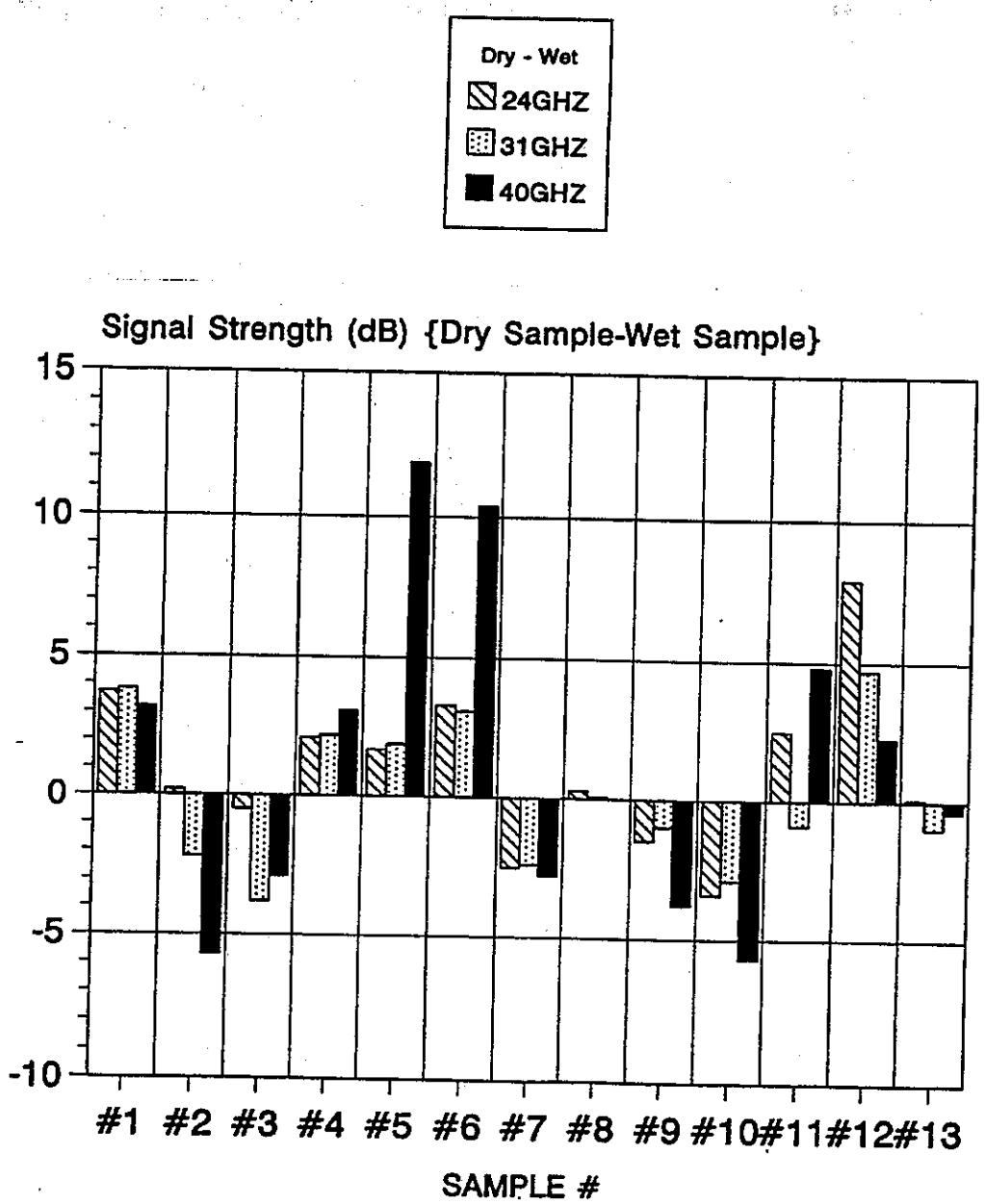

Fig. 6.7. Relative Reflectivity Using Concrete as the Reference

6.4 Environmental Tests

As part of the testing for this project, the effect of snow, sleet, rain, etc. on the performance of the radar module was considered. Figure 6.8 provides an indication of the change in signal level when a wet surface is encountered. Water has a high permittivity and hence should be a good reflector. Water on concrete is observed to provide an additional 5 dB of signal return while it can actually decrease the signal return from some of the striping material (#9 and #10). It should be noted that water wets some surfaces such as the Caltrans' paints while it tends to bead on the striping material. The influence of wetting needs to be further studied.

An additional concern was the effect of saline surfaces on the reflected signal due to road salt being used to remove ice and snow. Figure 6.9 shows that salt does not have a significant effect at the frequencies of interest. This is consistent with published data that indicates no effect above 10 GHz.

6.5 Evolution of the design

The original design originated from the concept that asphalt has a low permittivity relative to other materials such as titanium dioxide and water. The microwave reflectivity of a material depends primarily on the permittivity although other factors such as thickness and surface roughness can play a role. Hence a high permittivity paint stripe on top of asphalt or concrete should provide a differential signal that could be used to laterally guide the vehicle along a highway.

The second issue was that water, snow, and ice also have a high permittivity. Fortunately, these materials exhibit a relaxation frequency that causes the permittivity to decrease with microwave frequency. For example, water at room temperature has a relaxation frequency of about 18 GHz with ice much lower. On the other hand, solids such as paint and metals have a relaxation frequency at much higher frequencies. Hence if the measurement is made above the relaxation frequency of the water, there should still be a distinctive signature from the solid material even though it is covered by water or snow. At low frequencies, the water would dominate the reflection signature, and a difference between asphalt and the paint could no longer be discerned. The data presented in an earlier section provides confirmation that the effect of water can be overcome by using a sufficiently high carrier frequency (24 GHz or greater).

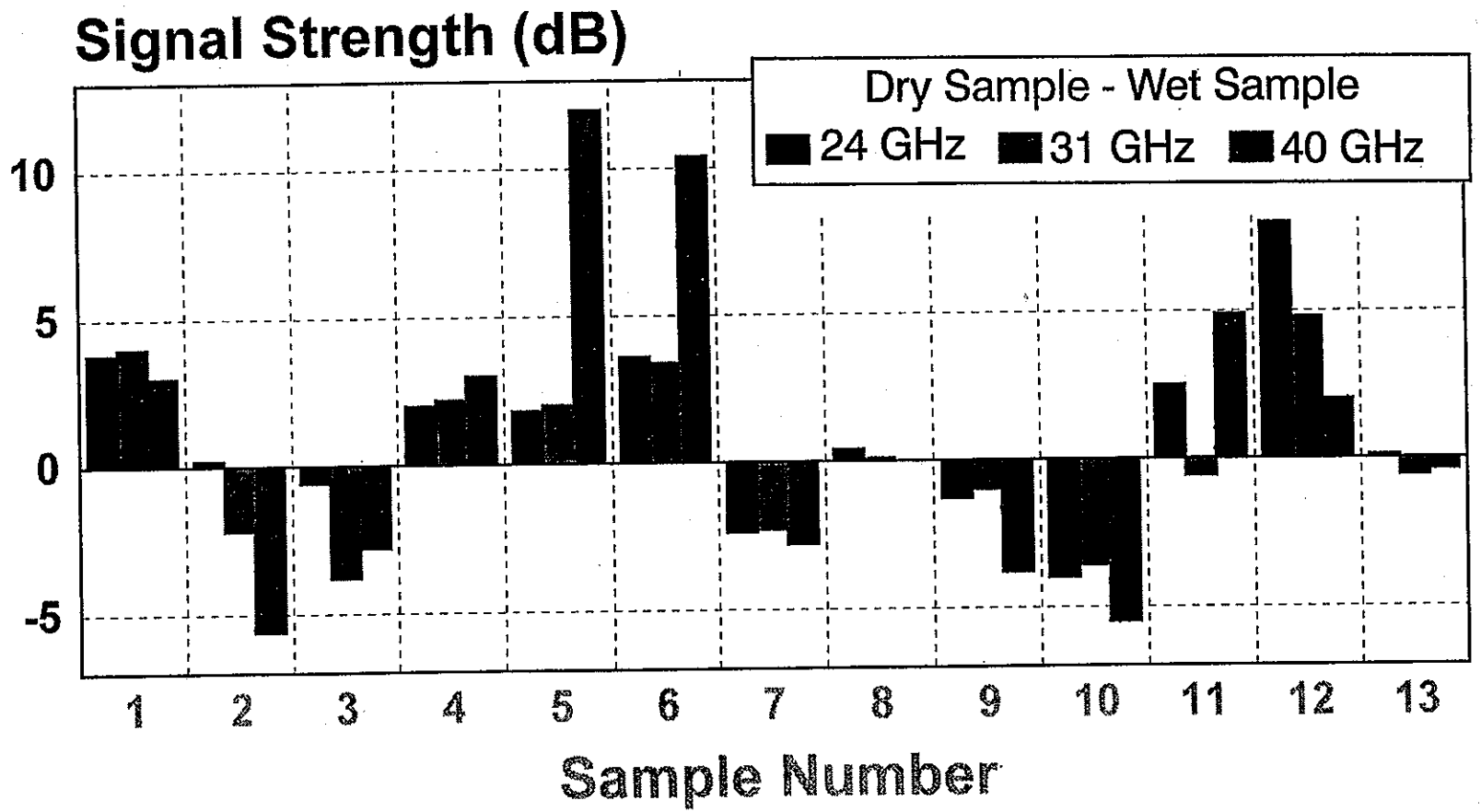

Fig. 6.8. Water Effect on Reflectivity

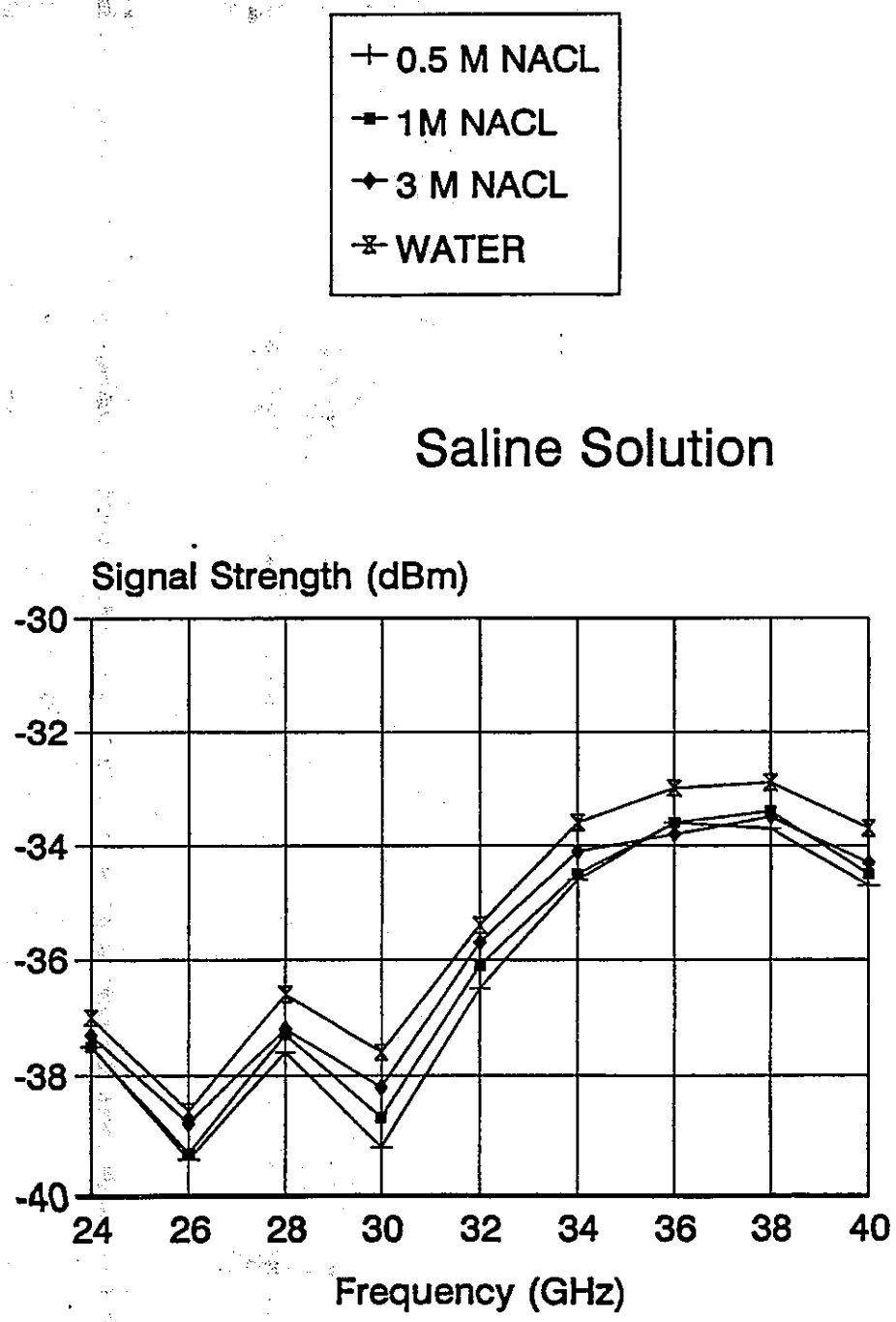

Fig. 6.9. Salt Water Effect on Reflectivity

Hence, the design concept was to develop a radar module that would work in inclement weather where, for example, a video camera might fail. An additional design goal was to try and take advantage of the striping used by the video camera guidance system. Either the radar and or the video camera could then provide a redundant system should the primary system fail.

6.6 On-Vehicle Tests

A working radar module was briefly tested January 5, 1994. The test runs where made on a 402 meter(1/4 mile) test track located at The California Highway Patrol training facilities where Caltrans also performs crash tests. Since this contract ended June 30, 1993, just a few test runs were made to demonstrate feasibility. Figures 6.10, 6.11, 6.12, and 6.13 depict sample test runs made on January 5, 1994.

Tests runs were made at speeds up to approximately 9 m/s(20 mph). The top plot in all Figures 6.10 through 6.13 is the differential signal(left horn signal minus the right horn signal) that was sent to the steering controller. The bottom plot in all Figures 6.10 through 6.13 is the actual lateral displacement of the vehicle in meters.

The test runs depicted in Figures 6.10 through 6.12 were made using an aluminum backed striping material for the lateral reference. In Figure 6.10, the vehicle started on the straight section and accelerated to 9 m/s(20 mph) before encountering the curved section. In Figure 6.11, the vehicle started on the curved section and accelerated to 9 m/s(20 mph). Figure 6.12 is an exploded view(first six seconds) of the test run made in Figure 6.10 in order to clearly observe the variation in the radar module signal.

Since the vision non-aluminum backed reference stripe was also available, radar tests runs were made using the vision stripe for comparison purposes. Figure 6.13 depicts a radar run using the vision stripe. Note that the performance of the radar module using the vision stripe appears to be about the same as for radar runs using aluminum backed striping material.

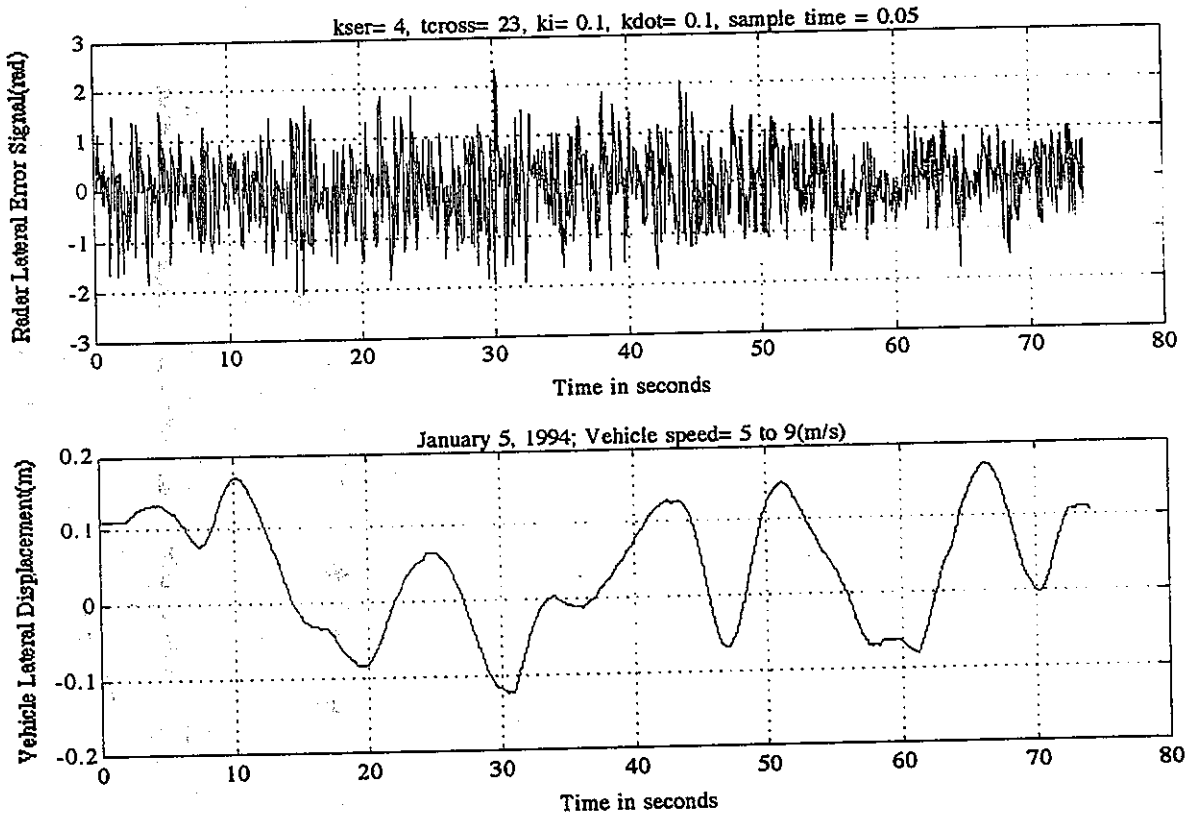

Fig. 6.10. Radar On-Vehicle Test Run January 5, 1994: Straight to Curve Test Sections(Aluminum Backed Tape)

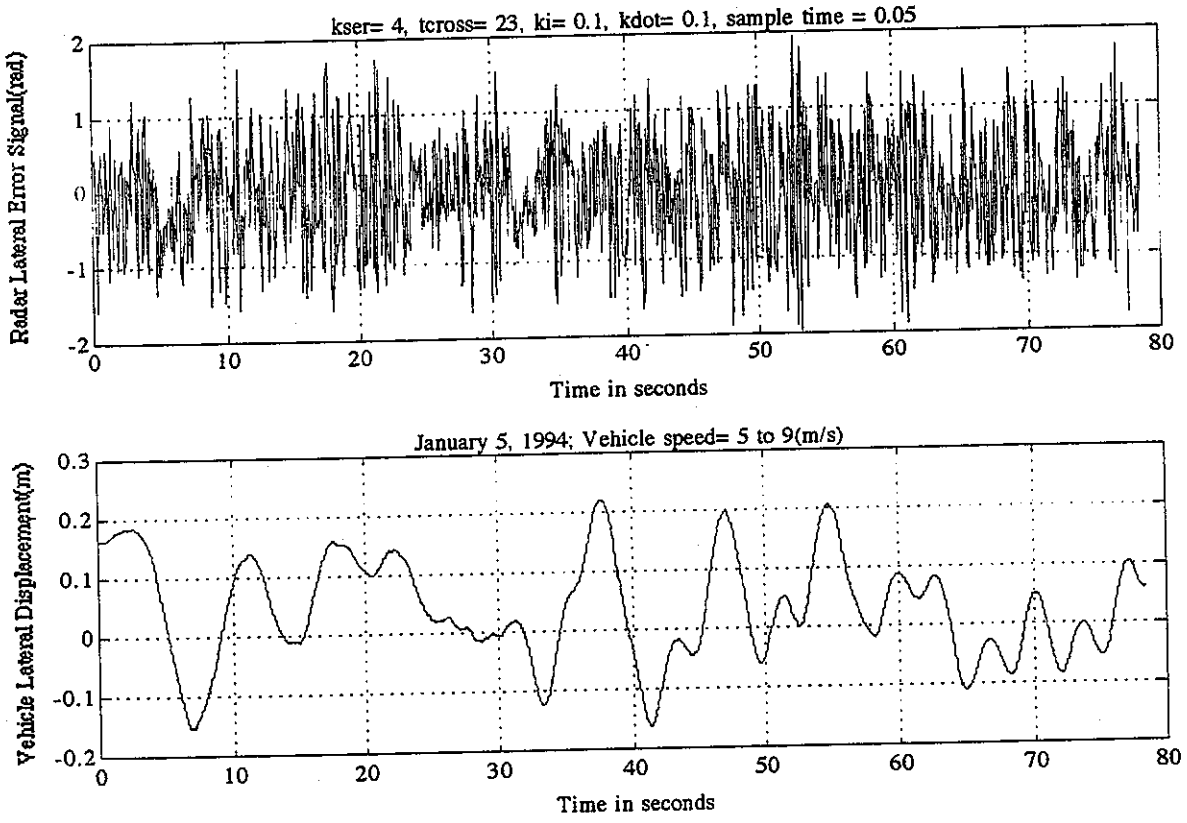

Fig. 6.11. Radar On-Vehicle Test Run January 5, 1994: Curve to Straight Test Sections(Aluminum Backed Tape)

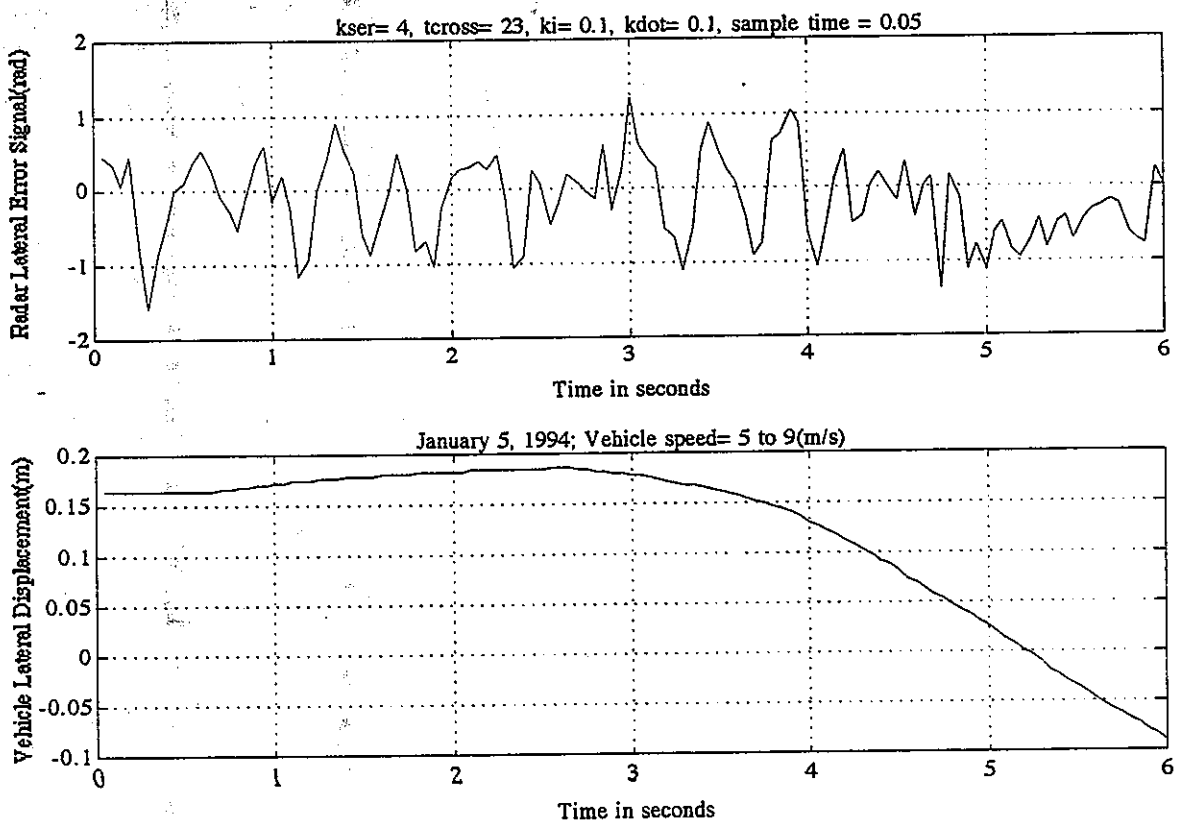

Fig. 6.12. Radar On-Vehicle Test Run January 5, 1994: Straight to Curve Test Sections(Aluminum Backed Tape)

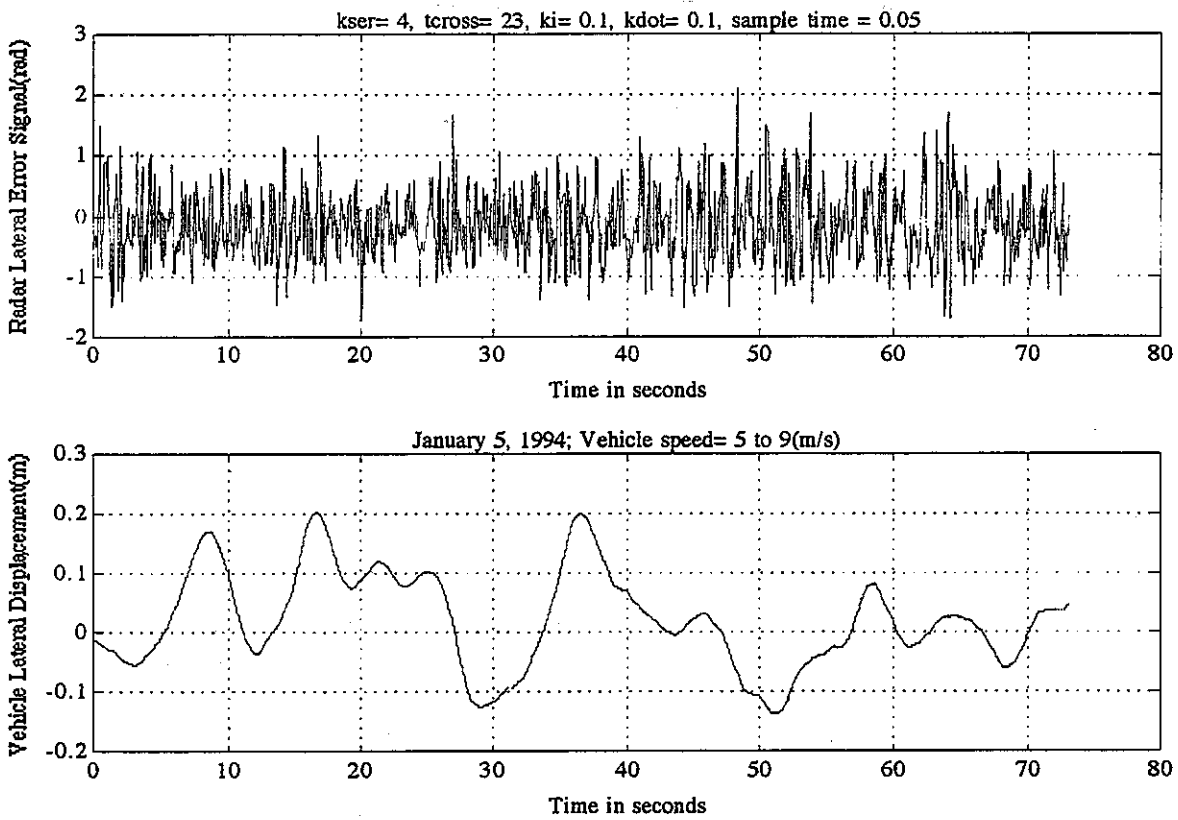

Fig. 6.13. Radar On-Vehicle Test Run January 5, 1994: Curve to Straight Test Sections(Vision Stripe)

6.7 On-Vehicle/Highway Infrastructure Cost-Tradeoffs

A budget estimate for the radar module parts is listed in Table 6.1. The budget estimate for the radar module is based on actual low volume part costs. The cost of the radar module can be improved by a factor of two by purchasing the parts in high volume.

Minor modifications of the existing roadway are required to support the radar approach, i.e., the center of the vehicle lanes of the roadway are striped. Furthermore, the automated roadway configuration for radar can be changed without requiring a major modification of the roadway. The striping material or a material with an appropriate permittivity could also be recessed in the roadway to improve durability of the reference.

6.8 Summary

Unfortunately, component failure of the M/A-COMMA radar modules delayed the gathering of dynamic test track data. The data gathered from the on-vehicle tests performed in January, 1994 suggest that further filtering and manipulation of the radar data will result in acceptable lateral control and operation of the vehicle at higher speeds.

The static and dynamic radar module tests indicate the feasibility of using a 24 GHz radar module to laterally guide a vehicle under day or night and in inclement weather conditions. Also, operation of the radar module at a frequency of 24 GHz or above is not affected by materials containing salt that are used to melt roadway ice and snow.

The radar approach shows considerable promise as a low cost lateral guidance system that can be stand-alone or complementary to the video lateral guidance system described earlier. In summary, vehicle lateral guidance using radar to sense lateral displacement of a vehicle is very attractive for the automated highway of the future.

7. STEERING MODULE

7.1 Block Diagram and Theory of Operation

The block diagram illustrating the hardware associated with the Steering Module is shown in Figure 7.1. The system is documented in detail by J. Jhuang [5], a graduate student working on this project. The control law is executed in the 486-33 MHz PC. The steering rate command is sent to the Galil Motor Controller Board that is slotted in the backplane of the 486-33 MHz PC. The Galil Motor Controller Board sends a steering command to a MFM Technology, Inc. BDC 2000 PWM(Pulse Width Modulation) amplifier that drives a MFM Technology, Inc. SM64 Series three-phase dc brushless servo motor. The three-phase dc brushless servo motor has excellent low-speed characteristics and can deliver a peak torque of 307 oz-in.

Steering position feedback from the motor resolver is interfaced with a Galil Interface Board that sends the feedback signal to the Galil Motor Controller Board. The MFM Technology, Inc. amplifier and steering feedback signal can be directly interfaced with the 486 Data Acquisition Board; however, in the interest of time, an off-the-shelf approach using the Galil Motor Controller Board was selected.

The Passive Wire Module sends an analog signal to the 486 Data Acquisition Board where an analog-to-digital conversion is made. The Passive Wire analog signal is proportional to the lateral displacement of the vehicle from its reference. The Radar Module sends two analog signals, phase shift and amplitude of the return radar signals, to the data acquisition board where they are digitized. Lateral Displacement is calculated in the 486 using a relationship that is a function of these two radar signals.

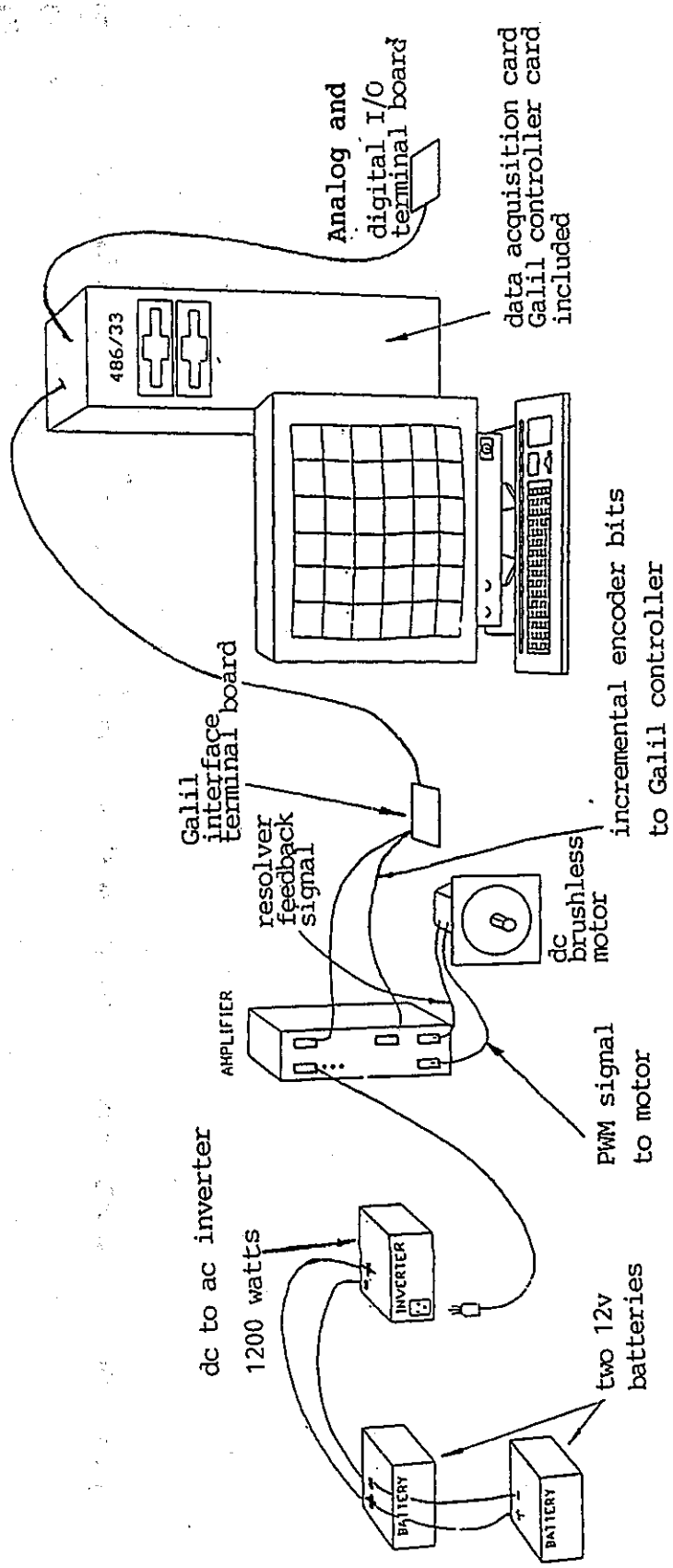

Fig. 7.1. Steering Module Block Diagram

7.2 Location of Motor

The steering column of the vehicle was removed and a gear was slipped onto the steering column and positioned under the driver's dash-board. A small gear is mounted on the shaft of the steering motor. These two gears are meshed together via a metal plate as shown in Figure 7.2. The gear ratio is 1:5.

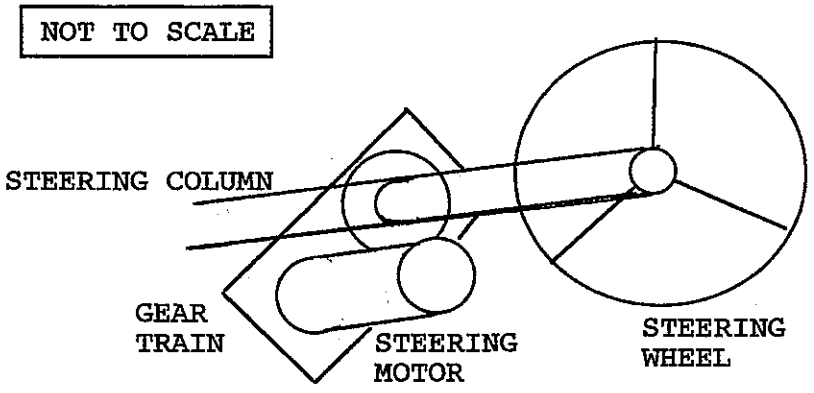

Fig. 7.2. Steering Motor Location Under Vehicle Dash

7.3 Relationship Between Motor Shaft Angle and Wheel Angle

The test vehicle was taken to an automotive shop that aligns the front wheels of vehicles. This facility was used to obtain the plots in Figure 7.3 that relates an angle of the steering wheel to actual position of the wheels. You will notice in Figure 7.3(a) that there is a slight difference in the data for the left and right wheels. Since the wheel angles of interest are in the order of 10 degrees or less, a straight line fit was used to map the steering wheel angle(steering column angle) to wheel angle. A dead-band in the order of 1 degree is noticed in the front wheels.

7.4 Motor-Bench Tests And Simulated Load

The steering motor and Galil controller were bench-tested in the laboratory. A steering load was simulated by using pulleys and weights as shown in Figure 7.4. The tests indicated that the motor had sufficient torque to perform the steering task for the Vision, Passive Wire, and Radar Modules.

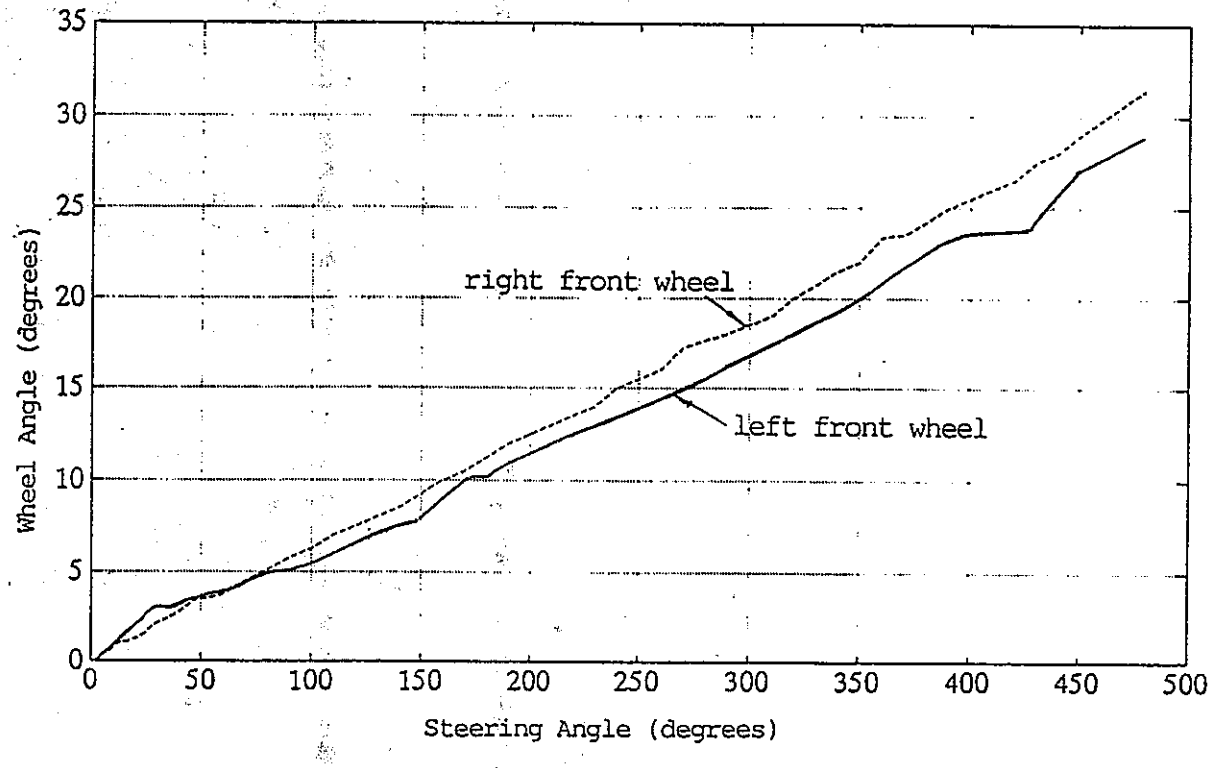

(a)

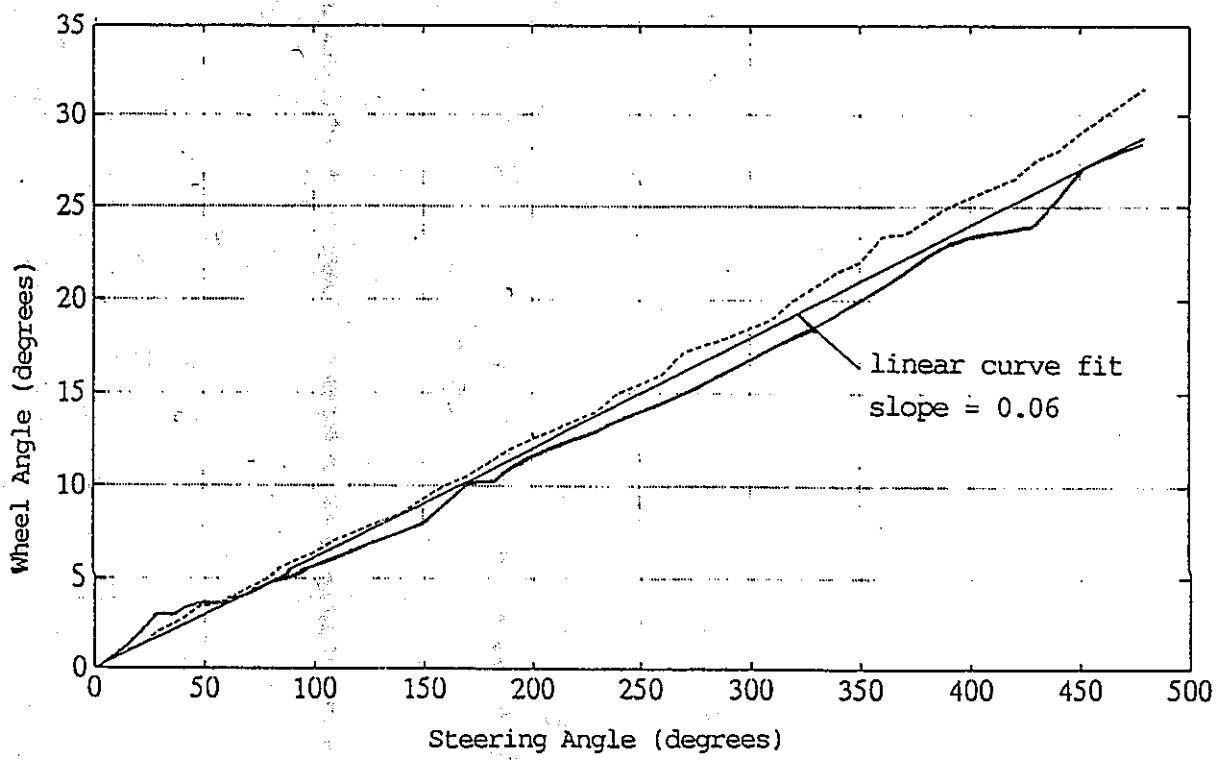

(b)

Fig. 7.3. Relationship Between Steering Wheel And Vehicle Front Wheel
(a) Wheel Angle Versus Steering Angle Field Data
(b) Linear Curve Fit of Field Data

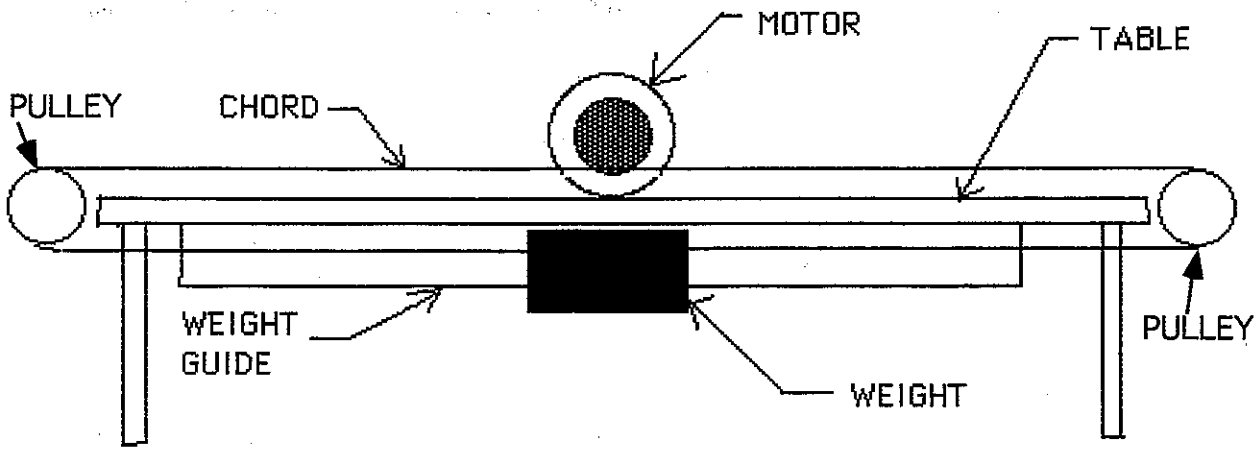

Fig. 7.4. Steering Motor Bench-Test

7.5 On-Vehicle Open-Loop Tests

A "C" program called RUNMOTOR was written to run open-loop tests of the steering subsystem. This program permits the user to specify a sine-wave, a square wave, or step steering angle to be sent to the steering motor. Frequency and amplitude of a sine-wave and square-wave, and amplitude of a step-input to the motor amplifier can be varied. These signals were sent to the steering motor as the vehicle moved forward at slow speeds. The test results indicated that for sinusoids of frequencies of 1 Hz or less, the steering motor tracked the command with only a slight variation in amplitude.

7.6 Evolution of Steering Control Law

A modified Slotine-Li adaptive control law was first designed [6] and simulated using MATLAB and then written in the "C" programming language and tested on the vehicle. This steering control approach controlled the vehicle well on straight sections, but could not adequately handle curves at high speeds. Rather than to design a new Slotine-Li control law that used velocity and acceleration as control inputs, we attempted to add acceleration compensation terms to the existing control law.

A puzzling aspect was the difficulty in changing a state model that was found in the literature search and that has been used by the California PATH Program. To circumvent this problem, a MATLAB identification routine was written that utilizes the data obtained from on-vehicle test runs with vision. The results were surprising in that a 1st order or 2nd order model for the vehicle dynamics appears to be satisfactory. It is surmised that the 4th order state models widely used apply more to vehicle operating conditions that use large vehicle wheel angles. Furthermore, steering backlash is not included in these models. The wheel angles required for lateral guidance range from 0 to 10 degrees where the largest wheel angles are encountered when starting from a stand still.

The new low-order test vehicle dynamic model suggested that perhaps a "structured" control law approach called the "sliding mode" [14] may be a good choice. The "sliding mode" control law obtains its name from the desire to force the state-space error trajectory along a prescribed path. Hence, a control law based on the "sliding mode" approach was designed, simulated using MATLAB, and was used for on-vehicle tests with vision, passive wire, and radar lateral displacement sensors. Based on the simulations and on-vehicle tests, it is anticipated that this control law will track curves at speeds of 31.29 m/s(70 mph) without requiring curve-preview. The design of this control law is discussed in a paper included in the Appendix.

7.7 On-Vehicle Steering Control Tests

Many on-vehicle tests with vision have been conducted over the last year. The steering subsystem during this time has generally been reliable.

7.8 Summary

Improved steering control can be achieved using a tighter vehicle steering mechanism. Hence, the steering backlash and the angle uncertainty of the front wheels would be reduced Front wheel angle sensors could also be mounted to provide more accurate wheel angle information. However, this is an additional expense and the wheel angle sensors must be sufficiently rugged to withstand forces exerted on the front end of the vehicle. This research indicates that tighter steering mechanisms, which is easily achieved, will be sufficient for automatic lateral guidance of vehicles.

8. CONCLUSION AND RECOMMENDATIONS

The research performed thus far indicates that vision, passive wire, and radar sensors are viable technologies for high speed vehicle lateral guidance of vehicles with conventional steering. The passive wire and radar sensors are more robust in an environmental sense. However, vision can be used in heavy rain, heavy fog, and light snow conditions, as a redundant system and as an early warning system. Furthermore, it is questionable whether autonomous vehicle control should be performed during hazardous highway conditions. Video tapes have been made of the vehicle operating with each of the sensors.

Over 3000 lines of "C" and MATLAB code was generated in support of this research project Also, over 650 pages have been generated that document this research project and are available upon request [1,3,4,5,6.7,9,20,21,22].

Initial research indicates that vision based neural networks that follow vehicles and other visible references may be strong candidates for lateral control, longitudinal control, and lane changing maneuvers.

Vision is currently being explored to autonomously control a Shadow Maintenance Vehicle laterally and longitudinally. The Shadow Vehicle uses a single camera to track a symbol on the back of the Lead Maintenance Vehicle.

An objective of the steering control of this research is to laterally control vehicles using a minimum of feedback information. This research has demonstrated that vehicles can be successfully steered using lateral displacement from the reference, steering angle feedback, and speed of the vehicle as the only inputs to the steering control law. Dealing with the steering backlash problem was the greatest steering control challenge.

One of the potential near term applications for each of these sensors is to use them in an early warning system to alert vehicle drivers that they are drifting out of their lane.

It may not be effective to pursue the passive wire approach as the effect of embedded rebar and steel bridges on passive wire systems may not be eliminated. Furthermore, there is less cost to employ the vision and radar approaches regarding modification of the freeway infrastructure to accommodate automatic vehicle lateral guidance.

The following recommendations are:

(1) Continue this research using the Vision Module and the Radar Module on different test vehicles to evaluate the effect of different vehicle dynamics on the steering control system.

(2) Explore the use of vision and radar to laterally navigate vehicles on mountainous roads under inclement weather conditions such as heavy rain and snow conditions.

(3) Develop better computer models for vehicle dynamics that more realistically simulate steering backlash and other nonlinear vehicle dynamics.

(4) Construct different driver interfaces to the lateral guidance system. Evaluate the "user friendly" characteristics of the driver interfaces and the ability of the driver to react to emergency situations.

(5) Evaluate vision and radar for feasibility as sensors for use in an early warning system.

(6) Explore using a neural networks/fuzzy logic lateral reference detector in conjunction with vision and radar lateral displacement sensors.

(7) Explore using a neural networks/fuzzy logic steering controller in conjunction with vision and radar lateral displacement sensors.

APPENDIX

VNIS Paper Presented in October 1993, Ottawa, Canada

Proceedings of the

IEEE - IEE

Vehicle Navigation and Informations Systems Conference

Ottawa Ontario

October 12 - 15 1993

Front cover photo kindly supplied by
the Ministry of Transportation of Quebec

Vehicle Lateral Guidance using Vision, Passive Wire and Radar Sensors

Mahlon Heller, *Member, IEEE* and Mimi Huie, *Member, IEEE*
Institute of Electrical and Electronics Engineer, Members
California State University, Sacramento
6000 J Street
Sacramento, California 95819-6019
Phone: 916-933-2092 FAX: 916-933-2092

ABSTRACT

This paper describes research performed in the area vehicle lateral guidance using vision, passive wire and radar sensors. Previous research work performed by others focused on the development of a single system. However, it is important to compare the feasibility of different sensing systems on a common platform to determine the best alternative that may be integrated in an automated highway system. A test vehicle is equipped with each of the three sensors and a common steering controller platform. Lateral displacement information from each of the sensors is interfaced with the common steering controller platform to provide a basis for comparison. A quarter mile test track has been prepared to test the vehicle in actual operation. Results from experimental data is evaluated in this paper. In addition, the control law, individual sensing systems and the overall system architecture is discussed.

1. INTRODUCTION

An Intelligent Vehicle Highway System (IVHS) is envisioned as the transportation system of the future that involves the application of advanced vehicle technologies to the existing transportation system. Advanced Vehicle Control Systems is one of five technological areas of IVHS [1].

Vehicle lateral guidance is a major component of Advanced Vehicle Control Systems. The most prominent benefit may be the increase in safety to drivers by minimizing the probability of collisions caused by erratic movement of vehicles [2]. Vehicle lateral guidance can be integrated with other components of Advanced Vehicle Control Systems such as longitudinal collision avoidance and lane change and merging maneuvers to develop a fully automated vehicle control system for implementation in an automated highway system.

This research is funded by the State of California, Department of Transportation and the Federal Highway Administration. Evaluation of three systems on a common steering controller platform will identify the advantages and disadvantages of each system based on criteria such as performance and reliability, ease of implementation and limitations to weather conditions. Objectives of the research are to determine the degree of vehicle lateral control that can be obtained using a conventional vehicle and to transfer applied technology to maintenance equipment automation, commercial vehicle operations and advanced public transportation systems.

2. TEST VEHICLE CONFIGURATION

The on-vehicle computer system is designed to accommodate the Vision, Passive Wire, Radar, and Steering Modules. The on-vehicle computer used is a 486-33 MHz PC mounted in a Chevrolet Celebrity Station Wagon. Power is delivered to the computer system and electronics using a 1200 Watt, 12 volt dc to 115 volt ac converter. This 12 Volt dc is obtained using the vehicle battery and a second battery.

The steering motor amplifier is supplied with 115 Volt ac power from a 1200 Watt, 12 Volt dc to 115 Volt ac converter. Two additional batteries in parallel with diode protection feed the dc to ac converter.

The computer system, the motor amplifier and other equipment are secured in the area behind the rear passenger seats. A computer monitor is mounted between the vehicle driver and the passenger-computer operator. A keyboard is used by the passenger-computer operator.

3. STEERING CONTROL

3.1 Steering System Overview

The control law is executed in the 486-33 MHz PC. A steering rate command is sent to the Galil Motor Controller Board that is slotted in the backplane of the 486-33 MHz PC. The Galil Motor Controller Board integrates the steering rate command and sends a steering command to a MFM Technology, Inc. BDC 2000 PWM (Pulse Width Modulation) amplifier that drives a MFM Technology, Inc. SM64 Series three-phase dc brushless servo motor. The three-phase dc brushless servo motor has excellent low-speed characteristics and can deliver a peak torque of 307 oz-in. The steering column of the vehicle was removed and a gear slipped onto the steering column and positioned under the driver's dash-board. The

motor to steering wheel gear ratio is 1:5. The steering mechanism exhibits approximately 1° of backlash deadzone.

Steering position feedback from the motor resolver is sent to the Galil Interface Board which in return sends the feedback signal to the Galil Motor Controller Board. The MFM Technology, Inc. amplifier and steering feedback signal can be directly interfaced with the 486 Data Acquisition Board; however, to minimize the interfacing of tasks, an off-the-shelf approach using a Galil Motor Controller Board was selected.

3.2 Steering Control Law

The steering rate command consists of three terms.

$$\dot{\delta} = K_1 \left(\frac{d_s}{K_2\, Vspd} - \delta_{fb}\right) + K_3\, \dot{d}_s + K_4 \int d_s dt \qquad (1)$$

where K_1, K_2, K_3, K_4 are selected constants via trial and error, d_s is the lateral displacement of the vehicle from the reference in meters, V_{spd} is the vehicle speed in m/s, and δ_{fb} is the steering feedback angle in r/s measured from the motor shaft.

The first term in (1) was derived using the "equivalent control method" [3] that assumes ideal dynamics of the vehicle on a sliding surface. The following idealized vehicle dynamics state model was derived via least-square-error fit of experimental data:

$$\begin{aligned} \dot{x}_1 &= -k_{ds}\, x_1 + x_2 + k_{\delta dot}\, V_{spd}\, \dot{\delta} \\ \dot{x}_2 &= k_\delta\, V_{spd}\, \delta \end{aligned} \qquad (2)$$

where $x_1 = ds$ and $x_2 = k_\delta \int V_{spd}(t)\delta(t)dt$. The sliding surface, ss, chosen is

$$ss = C(\dot{\delta} - \dot{\delta}_{desired}) + \ddot{\delta} \qquad (3)$$

where C is a constant. Redefining (2) in column vector form as

$$\dot{X} = f(X) + g(X)\, \dot{\delta}_{eq}, \qquad (4)$$

the equivalent control term is defined as

$$\dot{\delta}_{eq} = -\frac{< dss, f(X) >}{< dss, g(X) >} = K_1 \left(\frac{d_s}{K_2\, Vspd} - \delta_{fb}\right) \qquad (5)$$

assuming that the vehicle velocity is approximately constant over 0.05 seconds. The second term in (1) decreased the lateral displacement error on straight road sections. The third term in (1) decreased the lateral displacement error when the transition was made from a straight to a curved road section or from a curved to a straight road section. The computation cycle time used for the control law is 0.05 seconds.

The major challenge is the steering backlash. Although the ride comfort is qualitatively acceptable using this control law, further research is desirable. Tracking performance is discussed in each of the following sections describing the lateral displacement sensor used.

4. VISION

4.1 Vision System Overview

The reference for the Vision Module is a two inch, non-black stripe that is positioned in the center of the vehicle lane. The center of the lane was chosen to allow mounting of the camera behind the radiator pointing downward at the road (1) to control lighting conditions, (2) to ensure that the stripe is present in the video frame when vehicles are in close proximity of each other, (3) to avoid confusion with other stripe markings, (4) to ensure that a stripe was present as exiting left or right pavement markings were absent, (5) for better visibility under heavy fog and rain conditions and (6) to demonstrate proof-of-concept. Dods [4] experimented with mounting of the camera on the back of the vehicle. The approach used for this research can be modified to track existing lane markings.

The video camera is a 0.02 LUX, 512x480 pixel, CCD Camera with auto iris. The frame grabber located in the 486 PC digitizes an analog video frame into 512 by 480 pixels with intensities of 0 to 255. Lighting is controlled by standard vehicle fog lights mounted under the front of the vehicle to illuminate the area under the camera. Linear stretching and thresholding to produce a binary image is performed by the frame grabber. If the computed location of the stripe has shifted more than the acceptable range, the previous location of the stripe and an error signal is sent to the steering controller.

4.2 Environmental Conditions

The camera was set-up in the Caltrans environmental chamber for fog testing. The humidity was raised to simulate almost zero visibility conditions for vehicle drivers. Tests concluded that the camera can easily see the stripe in its current position in front of the radiator and under the hood of the vehicle.

Tests during the most recent sequence of heavy rain storms has verified that the stripe can be detected under heavy rain conditions.

4.3 On-Vehicle Tests

Many on-vehicle tests have been made and are ongoing. Test runs were made on an 1/4 test track consisting of a straight section and an 850 ft. radius curved section. The

maximum lateral displacement error is ±0.15 meters for straight and curved sections for speeds in the order of 65 mph. The maximum error is in the order of ±0.075 m for straight sections. The ride quality is acceptable and the steering wheel turns smoothly during the computer controlled runs. The vehicle has been successfully controlled for speeds up to 65 mph on the straight test section using the vision sensor.

5. PASSIVE WIRE

5.1 Passive Wire System Overview

Dr. C. Nelson, California State University, Sacramento led the research and experimentation (R&E) of the passive wire System. Earlier active wire systems formed the basis for the passive wire vehicle guidance system [5]. An exciting and sensor coil arrangement for a passive wire system was proposed by Velayudhan and Bundell [6].

The passive wire loops attached to the roadway can be thought of as two parallel wires, three feet apart, positioned in the center of a lane with connected cross wires every seven feet. The coils are mounted on the vehicle to induce a magnetic field in a passive wire loop and to sense this field. The passive wire exciting coil is horizontal and the passive wire magnetic field sensing coil is vertical. The pickup coil is rigidly mounted perpendicular to the exciting coil to null any mutual inductance between it and the exciting coil. Hence, voltages induced in the pickup coil result purely from mutual inductance between the passive loop and the pickup coil. When the pickup coil is centered in the passive loop, the net voltage is zero due to perfect cancellation of contributions from the longitudinally parallel wires. Phase of the induced voltage contains left and right information, and detection of this phase provides the voltage error signal from which the lateral displacement from the center of the lane is computed.

The exciter oscillator operates at a 5 kHz frequency. At this frequency, coil impedances are dominated by inductive reactance which limits the capacitively induced noise voltage. The coils are electrostatically shielded. Approximately 1 watt is radiated by the exciter coil. Recent data suggests that a much higher power level is desirable to increase the SNR.

Voltage versus lateral displacement is quite linear until the edges of the exciting coil approach the edges of the passive wire loop.

5.2 Location of Passive Wire Sensor

The coils are mounted under the front of the vehicle, between the radiator and the grill. The coils are fed through balanced shielded cables that run into the passenger compartment and are connected to the electronics.

5.3 Environmental Conditions

The passive wire sensor is an all weather sensor System. However, other metal objects under the passive wire loops may affect the induced magnetic field. Tests need to be made to access the impact of metal running under the passive wire loops.

5.4 On-Vehicle Tests

Recent tests have been successfully run at 30 mph using the passive wire system. At this speed, the maximum lateral displacement error is in the order of ±0.05 m.

6. RADAR

6.1 Radar System Overview

Dr. B. Johnson and Dr. I. Chattergee of the University of Nevada, Reno(UNR) led the R&E of the radar System. Fig. 1 presents a block diagram of the radar module to be used on the test vehicle. An AM modulated 24 GHz signal is transmitted from the vehicle to the center of the roadway under the front of the vehicle and its reflection from the reference/roadway is sensed by a receiving antenna. The receiving antenna takes the signal and splits it into two parts to reconstruct both phase and amplitude information. The feedback also provides frequency control so that the receiver tracks the transmitter. The phase shift of the 500 MHz return signal relative to a reference and the amplitude of the 24 GHz return signal provides the information to calculate the direction and lateral displacement of the vehicle from the reference.

The radar module in Fig. 1 converts an AM modulated signal to FM through a unique design [8]. Parts of the design are incorporated from a M/A-COMM range measuring radar and many of the components have been purchased from M/A-COMM.

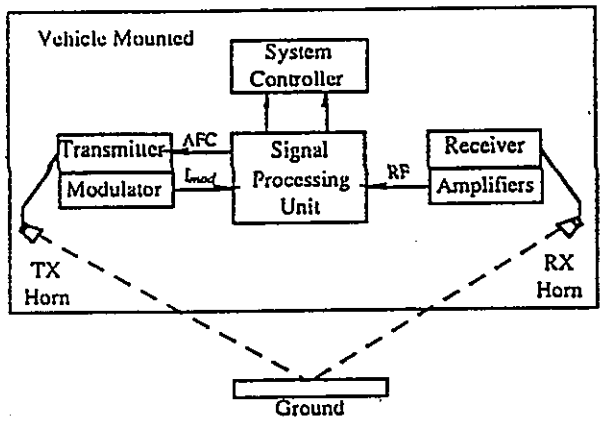

Fig. 1 Radar Module Block Diagram

6.2 Location on Vehicle

The 24 GHz module can be mounted on a variety of locations on the vehicle and only occupies a volume of approximately 12 by 3 by 4 cubic inches. A position in front of the vehicle and 24 inches above ground for the initial testing was selected. The module is mounted on a plate that will bolt into existing holes on the front bumper. This location was chosen to avoid noise and interference with the video camera or the passive wire coils.

6.3 Reference Material

Initial measurements designed to test the feasibility of the approach used 3 and 6 GHz coaxial probe contact measurements on a variety of paint samples with a high titanium and aluminum content and various highway striping materials. Using a computer program and a network analyzer, the permittivity of the samples were extracted [9]. The data indicated that there should be enough difference between the permittivity of asphalt and some of the paints to get a good differential signal. These contact measurements provided the justification to continue on to microwave reflectivity measurements of striping material in concrete and asphalt under wet and dry conditions.

Based on the reflectivity data, 3M aluminum backed striping was selected for the 1/4 test track.

6.4 Environmental Tests

As part of the testing for this project, the effect of snow, sleet, rain, etc. on the performance of the radar module was considered. The assessment at this time, based on reflectivity data taken using wet and dry samples, is that the radar module will perform satisfactorily in all weather conditions. However, it should be noted that water wets some surfaces such as the Caltrans' paints while it tends to bead on the striping materials. We are still investigating the effect of beading on certain materials.

An additional concern was the effect of saline surfaces on the reflected signal due to road salt being used to remove ice and snow. Salt does not have a significant effect at the frequencies above 10 GHz [10].

6.5 On-Vehicle Tests

On-vehicle tests are scheduled to shortly begin. Off-vehicle tests have been performed using a test cart with the radar module mounted on it. The cart tests support the feasibility of using radar for vehicle lateral guidance.

7. CONCLUSION

Research results and on-vehicle testing indicate the feasibility of using vision, passive wire, and radar sensing technologies for use in early warning systems and for autonomous lateral control of present day conventional vehicles moving at speeds up to 70 mph. This R&E also demonstrates that curve preview information is not required, albeit desirable. Aspects of this technology are being researched to develop laterally controlled maintenance vehicles such as crack sealing, paint striping, and reflective marker placement machines. Design of an autonomous shadow maintenance vehicle is underway.

REFERENCES

[1] K.S. Chang, et al, *Automated Highway System Experiments in the PATH Program*, IVHS Journal, Vol. 1, No. 10, 1993.

[2] J.G. Bender, *An Overview of Systems Studies of Automated Highway Systems*, IEEE Trans. Vehicular Tech., vol. 40, no. 5, 1991.

[3] M.W. Spong and M. Vidyasagar, *Robot Dynamics and Control*, New York, John Wiley & Sons, Inc., 1989.

[4] J.S. Dods, *The ARRB Lateral Position Indicator*, Technical Manual ATM No. 15, Australian Road Research Board, Victoria, Australia, 1982.

[5] S. Matsumoto, et al, *An Automatic Driving System of Automobiles by Guidance Cables*, in Proceedings International Automotive Engineering Congress, Detroit, Mich. January 8-12, 1973.

[6] A.R. Spangler and F.M. Snell, *A New Vehicle Guidance and Speed Control System*, in Proceedings 41st Annual Meeting of Electronics in Traffic Operations, Highway Research Board, Bulletin 338, January, 1962.

[7] C. Velayudhan and J.H. Bundell, *Simple Inductive Displacement Transducer*, Rev. Sci. Instrum. vol. 55, no. 10.

[8] B. Johnson, et all *A Lateral Guidance Radar Module*, to be published in the Proceedings of the International Symposium on Automotive Technology and Automation, Aachen, Germany, September, 1993.

[9] P. Subedi, et al, *Automated Non-Invasive Permittivity Measurement*, in Proceedings of the ISMM International Symposium on Computer Applications in Design, Simulation and Analysis, Acta Press, 1992.

[10] E. Nyfors and P. Vainikanien, *Industrial Microwave Sensors*, Arctech House, MA, 1989.

REFERENCES

[1] Heller, M. D. and Huie, M. (1993). "Lateral Vehicle Guidance using Vision, Passive Wire, and Radar Sensors." *Vehicle Navigation & Information Systems Conference*, Ottawa, Canada

[2] Dods, J. S. (1982). "The ARRB Lateral Position Indicator." *Technical Manual ATM No. 15.* Australian Road Research Board, Victoria, Australia.

[3] Heller, M., Trahms, R., Chatusripitak, S. (1991). "Vehicle Lateral Guidance Using a DSP Based Vision System." *Applications of Advanced Technologies in Transportation Engineering: Proceedings Of The Second International Conference*, Minneapolis, Minnesota, August 18-21, 438-442.

[4] Kelley, C. (1992). "Vehicle Lateral Guidance Using Vision." *Master of Science Project*, California State University, Sacramento, CA.

[5] Zhuang, J. (1991). "Design and Development of a Vehicle Lateral Steering Control System." *Master of Science Project*, California State University, Sacramento, CA.

[6] Zhou, J. Z., (1991). "A Steering Control System With a Vehicle Lateral Guidance Adaptive Control Law." *Master of Science Project*, California State University, Sacramento, CA.

[7] Zhang, J. (1992). "Analysis of a Cavity-Backed Slot Line and Its Application to Vehicular Lateral Guidance." *Master of Science Project*, California State University, Sacramento, CA.

[8] Velayudhan C., Bundell, J. H. (1984). "Simple Inductive Displacement Transducer." *Rev. Sci. Instrum.* 55(10).

[9] Birkan, I. A. (1991). "Design of Detector and Excitor Coils for Passive Wire Vehicle Lateral Guidance System." *Master of Science Project*, California State University, Sacramento, CA.

[10] Matsumoto,S., Inaba H, Harashima F., Furumata M., Ito T. (1973). "An Automatic Driving System of Automobiles by Guidance Cables," International Automotive Engineering *Congress*, Detroit, Mich. January 8-12.

[11] Spangler A.R..,Snell F.M. (1962). "A New Vehicle Guidance and Speed Control System," *41st Annual Meeting of Electronics in Traffic Operations, Highway Research Board*, Bulletin 338, January.

[13] Ramo S., Whinnery J.R., van Duzer, T. (1984). *Fields and Waves in Communication Electronics*, John Wiley & Sons, Inc, New York.

[14] Spong, M. W., Vidyasagar, M. (1989). *Robot Dynamics and Control*, John Wiley & Sons, Inc., New York.

[15] Shaldover, S., Desoer, C., Hedrick, J., Tomizuka, M., Walrand, J., Zhang, W., McMahon, D., Peng, H., Skeikoleslam, S., and McKeown, N. (1991). "Automated vehicle control developments in the PATH program," *IEEE Trans. Vehicular Tech.*, vol. 40, pp. 114-130, Feb.

[16] Masaki, Ichiro, Editor (1992). *Vision-based Vehicle Guidance*, Springer-Verlag New York, Inc., New York

[17] Nyfors, E. and Vainikainen, P. (1989). *Industrial Microwave Sensors*, Artech House, MA.

[18] Chatterjee, I. and Subedi, P. (1991). "Measuring Absorbed Moisture in Asphalt Pavements," *Report No. CIS-91-16, Center for Infrastructure Studies*, College of Engineering, University of Nevada, Reno, August.

[19] Chatterjee, I. and Subedi, P. (1993). "Dielectric Model for Asphalt-Aggregate Mixtures," accepted for Publication in the *Journal of Microwave Power and Electromagnetic Energy*, Vol. 28, No. 2.

[20] Johnson, B., Chattergee, I., Hodder, D., and Carone, B. (1993). "A Lateral Guidance Radar Module," to be published in the *Proceedings of the International Symposium on Automotive Technology and Automation*, Aachen, Germany, September 13-17.

[21] Subedi, P., Chatterjee, I., and Johnson, B. (1992). "Automated Non-Invasive Permittivity Measurement," *Proceedings of the ISMM International Symposium on Computer Applications in Design, Simulation and Analysis*, Acta Press.

[22] Trahms III, R. G. (1992). "Vehicular Relative Position Information Techniques Using an Image Input Neural Network." *Master of Science Thesis*, California State University, Sacramento, CA.

[23] Slotine, J-J. E., Li, Weiping (1989). *Applied Nonlinear Control*, Prentice Hall, New Jersey.