CROSS CANYON INSTRUMENTATION REPORT

74-52
DND

TF

ClibPDF - www.fastio.com

ClibPDF - www.fastio.com

STATE OF CALIFORNIA
DEPARTMENT OF TRANSPORTATION
DIVISION OF CONSTRUCTION
OFFICE OF TRANSPORTATION LABORATORY

07-LA-210-R-12.0/R15.6
Near Sunland
(96-inch Prestressed
Culvert
84-inch Reinforced
Culvert)
Lab Auth. 652150
D-4-133

Mr. Robert C. Cassano
Chief, Office of Structures Design
Division of Project Development

Attention: Mr. W. J. Jurkovich
Chief, Special Projects

Gentlemen:

Submitted for your consideration:

REPORT OF INSTRUMENTATION
FOR
CROSS CANYON CULVERT ON INTERSTATE 210

Work Performed by ..... Geotechnical Branch

Under the Supervision of ..... R. A. Forsyth

Work Supervised by ..... J. B. Hannon
and
B. L. Lister

Analysis and Report by ..... R. L. Thompson

Very truly yours,

Neal Andersen

NEAL ANDERSEN
Chief, Office of Transportation Laboratory

RLT:lb

Attachment

ClibPDF - www.fastio.com

ClibPDF - www.fastio.com

TABLE OF CONTENTS

	Page
LIST OF FIGURES	ii
INTRODUCTION	1
ZONE INSTRUMENTATION	1
SETTLEMENT PLATFORMS - ROD AND PLATE (RISER) TYPE	2
SETTLEMENT PLATFORMS - FLUID LEVEL TYPE	4
PRESSURE CELLS - INTERFACE METERS	5
a. Fabrication	5
b. Installation	6
c. 96 Inch Prestressed Pipe	7
PRESSURE CELLS - EMBANKMENT METERS	9
DEFORMATION BALLS	11
ROTATION BALLS	12
SURVEY MONUMENTS	12
READING SCHEDULE	13
FIGURES	14

ClibPDF - www.fastio.com

ClibPDF - www.fastio.com

LIST OF FIGURES

No.		Page
1	Cross Canyon Culvert Plan	14
2	Sealed Fluid Level Type Settlement Platform	15
3	Legend for Settlement Platform Locations	16
4	Cross Canyon Culvert Settlement Platform Locations - Zone 1	17
5	Cross Canyon Culvert Settlement Platform Locations - Zone 4	18
6	Cross Canyon Culvert Settlement Platform Locations - Zone 8	19
7	Cross Canyon Culvert Settlement Platform Locations - Zone 9	20
8	Cross Canyon Culvert Settlement Platform Locations - Zone 10	21
9	Cross Canyon Culvert Soil-Concrete Interface Pressure Meter Installation	22
10	Cross Canyon Culvert Typical Cable Raceway - Zone 11	23
11	Cross Canyon Culvert Pressure Cell and Steel Ball Locations - Zone 1	24
12	Cross Canyon Culvert Pressure Cell and Steel Ball Locations - Zone 2	25
13	Cross Canyon Culvert Pressure Cell and Steel Ball Locations - Zone 3	26
14	Cross Canyon Culvert Pressure Cell and Steel Ball Locations - Zone 4	27

ClibPDF - www.fastio.com

ClibPDF - www.fastio.com

LIST OF FIGURES (Continued)

No.		Page
15	Cross Canyon Culvert Pressure Cell and Steel Ball Locations - Zone 5	28
16	Cross Canyon Culvert Pressure Cell and Steel Ball Locations - Zone 6	29
17	Cross Canyon Culvert Pressure Cell and Steel Ball Locations - Zone 7	30
18	Cross Canyon Culvert Pressure Cell and Steel Ball Locations - Zone 8	31
19	Cross Canyon Culvert Pressure Cell and Steel Ball Locations - Zone 9	32
20	Cross Canyon Culvert Pressure Cell and Steel Ball Locations - Zone 10	33
21	Cross Canyon Culvert Pressure Cell and Steel Ball Locations - Zone 11	34
22	Cross Canyon Culvert Junction Box Connections for Embankment Pressure Cell Leads	35

ClibPDF - www.fastio.com

ClibPDF - www.fastio.com

INTRODUCTION

This report describes the instrumentation of two large concrete culverts located on Interstate 210 at P.M. 13.6, near Sunland, in Los Angeles County, California. One of the culverts is a functional 96 inch inside diameter prestressed concrete pipe, used to conduct runoff waters under the freeway from the area above Cross Canyon. The second culvert is an 84 inch inside diameter dummy, fabricated of reinforced concrete and positioned about 10 ft above and 10 ft to the side of the 96 inch pipe. This nonfunctional culvert was intentionally underdesigned to induce failure.

The instrumentation of the Cross Canyon culverts is part of California's rigid pipe research program conducted by the Office of Structures. The culverts were instrumented in 1974 by the Transportation Laboratory in compliance with the Office of Structure's resume "Research Operations - Cross Canyon Culverts," except for special cases as noted in this report.

This paper describes only the instrumentation placed by the Laboratory's Geotechnical Branch. Instruments and systems installed by the Electrical Instrumentation Group of the Laboratory's Engineering, Administration, and Services Branch will be described elsewhere.

ZONE INSTRUMENTATION

The functional culvert has two instrumented zones: 11 and 12. Zone 11 consists of 3 pipe segments which have con-

ClibPDF - www.fastio.com

crete to soil interface pressure meters, rotation balls, and deformation balls. There is also a series of survey monuments from the inlet to the end of the instrument zone. Zone 12 is a control pipe segment laid on end and buried in the embankment material near the pipe inlet. It is equipped with a wood cover. Deformation balls were the only instrumentation installed in Zone 12.

The 84-inch diameter RC dummy pipe is comprised of a series of zones, numbered 1 through 10 as depicted in the general plan view, Figure 1. Rotation balls and deformation balls were placed in all 10 zones. Zones 1, 4, 8, 9, and 10 have fluid level settlement platforms. Zones 8, 9, and 10 have rod and plate settlement platforms extending through the side walls. Zones 1, 2, 3, 4, 5, 6, 8, 9, and 10 have concrete to soil interface pressure meters embedded in the periphery of the pipe and also have soil pressure meters embedded in the embankment above the pipe. There is a series of survey monuments through the access pipe and survey monuments in each test zone.

SETTLEMENT PLATFORMS - ROD AND PLATE (RISER) TYPE

At Zone 8 there are 5 rod and plate settlment platforms to measure the maximum compression of the polystyrene covering around the pipe. They are located at the crown, at each of the upper octants, and at each end of the horizontal diameter. The settlement platforms are 18-inches square by 1/8-inch thick steel plates with a length of 1/4-inch water pipe attached. During the manufacture of the RCP segments, lengths of 1 1/2-inch galvanized pipe were cast in place to allow access into the pipe for the rod and plate settlement platforms at the required locations. After the polystyrene was placed, the settlement

ClibPDF - www.fastio.com

platforms were installed with the 1/4-inch iron pipes going through the polystyrene and the walls of the RCP. The length of 1/4-inch pipe that extended past the inter-surface of the RCP was measured with a steel pocket tape and recorded. All subsequent readings were taken in the same manner.

At Zone 9 there are 2 rod and plate settlement platforms to measure the maximum compression of the uncompacted embankment placed above the pipe. These devices were fabricated by bolting a 3/4-inch galvanized pipe floor flange to a 16-inch square piece of 3/4-inch plywood. A length of 3/4-inch galvanized pipe was screwed into the floor flange. The pipe lengths used were approximately 2 1/2-feet or 7 1/2-feet. One of these units was placed approximately 6-inches over the crown of the RCP at the interface between the compacted and uncompacted embankment material. The second unit was placed 5 feet higher in elevation a top 5-feet of uncompacted material.

During the manufacture of the pipe segments, two lengths of 1 1/2-inch galvanized pipe were installed at the crown. These openings were used to bring the 3/4-inch pipes of the rod and plate settlement platforms into the RCP. The amount of 3/4-inch pipe that extended past the inside pipe surface was measured with a steel pocket tape and recorded. All plate and rod readings were made with a steel pocket tape.

At Zone 10 the procedures were the same except the uncompacted embankment material was replaced with baled straw. The rod and plate settlement platforms were installed to measure the maximum compression of the baled straw placed above the pipe.

ClibPDF - www.fastio.com

SETTLEMENT PLATFORMS - FLUID LEVEL TYPE

Sixty-five sealed fluid-level type settlement platforms were installed in the Cross Canyon Embankment in 5 zones with 13 settlement platforms in each zone. The embankment was constructed some 3 to 5 feet above the desired elevation and a trench was dug with a backhoe to the desired elevation. Construction details of a typical settlement device are depicted in Figure 2.

The air and water lines (3/8-inch polyethylene tubing) were carried to the outside of the embankment in 2-inch schedule 80 PVC pipe. As the length of these systems varied from 600 to 800 feet and the tubing was available only in spools of 500 feet, a field splice was required in each case. These splices were all made at the location marking the end of the tubing with the longest run. The splices were protected with either large metal electrical boxes or lengths of corrugated metal culvert pipe. As a result of embankment construction procedure the end of the 2-inch PVC was about 10 feet below the elevation of the settlement platforms. Lengths of 3/4-inch flexible conduit were used between the end of the 2-inch PVC and read-out box for each settlement platform.

Readout devices (indicating units) were mounted on 1/2-inch plywood which was attached to 8-foot long metal sign posts driven into original ground outside the influence of the embankment. The 1/2-inch polyethylene pipe drain lines were all brought together, bundled, run along the outside of the 2-inch PVC in the same trench, and daylighted at the outer limits of the embankment. Initial elevations were established on all the settlement platforms and also on

ClibPDF - www.fastio.com

the zero points of all the readouts and were subsequently checked at periodic intervals.

Figures 4 through 8 show the location of settlement platforms at the applicable zones and pertinent settlement platform installation data. Figure 3 is the legend explanation for Figure 4 through 8.

PRESSURE CELLS - INTERFACE METERS

The concrete to soil interface meters are of the Carlson type manufactured by two companies: Teledyne, and Carlson. As they have identical external dimensions the installation procedure for both makes of meters was the same.

All pressure meters were calibrated before installation by placing the meters in a steel frame and applying hydraulic pressure.

Fabrication

The 84-inch RCP had 5 segments with 2 rows of pressure meters and 3 pipe segments with 3 rows of pressure meters.

To facilitate installation of the meters, wood blanks were cast into the concrete pipe segments at the Ameron Pipe Plant. The reinforcing steel cages were made available for the installation of the wood blanks along with an inside form.

The components for the pressure cell knock-outs were assembled prior to the installation to the cages. The stems of these wood blank knock-outs were encased in

ClibPDF - www.fastio.com

6 1/2-inch lengths of thin wall electrical conduit with a Number 9 rubber stopper inserted into the electrical conduit to prevent intrusion of concrete (see Figure 9).

With the interform attached to the bottom plate, the locations were marked for the pressure cell knock-outs on the interform. The reinforcing steel cage was placed and pressure cell blanks were attached to the cage with tie wires at each marked location. This entire assembly was transported to the casting area and the outer form was placed on the assembly prior to casting. This operation was observed closely by the instrumentation personnel to make sure that the blanks were not disturbed or damaged. The top plate was installed, the concrete was placed, and the pipe segment was steam-cured for the specified time. After curing and stripping, the rubber stoppers and wood blanks were removed.

Installation

The surfaces formed by the wood blanks were roughened with a slotting tool in a roto-hammer and the roughened area where the pressure cell was to be installed was thoroughly cleaned. The pressure cell was then grouted in place, using a mixture of sand and cement in equal parts (see Figure 9).

All pressure cells on the bottom half of the pipe, including the ones at the spring line, were installed at the pipe manufacturer's yard in South Gate. Readings were taken with a Starrett protractor head to determine the pressure cell interface installation angle. The conductor cables

ClibPDF - www.fastio.com

were coiled and secured inside the pipe segments and plywood strips were banded over the outside of the pressure cells during shipment to the jobsite. After the pipe segments were assembled at the jobsite, the upper 3 pressure cells per plane were installed and the angle of installation of all the pressure cells was determined.

Initial readings were taken on all pressure cells at the time of installation. The conductor cables for the 3 bottom pressure cells were encased in 3/4-inch flexible conduit up to a point 30° below the springline for protection from foot traffic through the pipe. A 2 by 2 by 4-inch metal electrical box with a 3/4-inch "Tite Bite" attached to the box was epoxied into the 1 1/2-inch holes for the three bottom pressure cells inside the pipe segments. A 3/4-inch flexible conduit was used between the three boxes to protect the pressure cell leads. At this point the Electrical Instrument Section of TransLab completed the installation by connecting the meters to the data acquisition system.

96 Inch Prestressed Pipe

The instrumentation procedure was slightly different for the 96-inch prestressed pipe. Since this pipe would function as an active culvert, the conductor cables could not be exposed to the inside flow surface. Therefore, cable raceways were cast into the two pipe segments in which the Carlson type pressure cells were to be installed (see Figure 10). The pressure cell locations were marked on the steel reinforcing cages. A 4 by 4 by 4-inch weatherproof metal electrical box was attached to the steel cage at a distance that would be flush against the inside pipe

ClibPDF - www.fastio.com

form. A 17-inch long section of 1 1/2-inch thin-wall conduit was attached to each electrical box with a weatherproof connector. The conduit was attached to the reinforcing cage with tie wires perpendicular to the axis of the pipe. The end of the conduit was plugged with a Number 9 stopper to prevent the intrusion of concrete during casting and to give the conduit length enough to be flush against the outside pipe form when it was installed. There were 10 of these assemblies per plane connected together with a length of 1 1/2-inch polyethylene pipe (see Figure 10). All joints were sealed with tape or caulking compound to ensure that concrete would not enter the system during casting. The inside and outside pipe forms were then installed and the concrete pipe was cast and cured. The forms were then stripped and the Number 9 rubber stoppers were removed.

A 1 1/2-inch diameter wooden dowel of sufficient length to extend to the outside of the first layer of prestressing wire was placed into each hole formed through the concrete pipe by the 1 1/2-inch conduit and rubber stopper. After the first layer of prestressing wire was wound around the pipe and prestressed, the wooden dowels were removed from the holes and replaced with the wooden dowels on the pressure cell blanks.

The pressure cell blanks were positioned perpendicular to the axis of the pipe and flush with the proposed outside surface of the pipe. A concrete brush coat was applied evenly to cover the first layer of prestressed wire. A second layer of prestressed wire was wound around the first layer of the concrete brush coat and a final brush coat of concrete was applied, covering the prestressed

ClibPDF - www.fastio.com

wire and flush with the face of the pressure cell blanks. After curing, the pressure cell blanks were removed from the prestressed concrete pipe. The pressure cells in the bottom half of the pipe and at the springline were then grouted in their preformed recesses. A mixture of 50% sand and 50% cement grout was used for the installation of the pressure cells. Plywood strips were banded around the outside of the two pipe segments to hold the grouted pressure cells in place during transit to the jobsite. The remaining three pressure cells for each pipe segment were installed after the pipe was in place. The interface angles of installation were taken on all pressure cells to determine their precise orientations. Initial readings were obtained on the pressure cells following their installation to establish a zero and to verify that they were still functioning.

Refer to Figures 11 through 21 for interface pressure cell, deformation, and culvert rotation ball locations. Also shown on Figures 11 through 21 is the diagram of the orientation of the five planes within each zone.

PRESSURE CELLS - EMBANKMENT METERS

In Zones 1, 3, 4, 5, 6, 8, 9, 10, and 11 two planes of 3 soil stress meters each were embedded in the embankment 6-feet above the crown. One meter is on the centerline of the culvert, a second is 10-feet left, and a third is located 10-feet right of centerline. The pressure cells were purchased from two manufacturers: Kyowa, and Ormond.

ClibPDF - www.fastio.com

Trenches were dug for pressure cell placement with a backhoe after the embankment construction had progressed 2 to 3 feet above the specified elevation. Some embankment material was screened to remove the +1/4-inch material and a thin layer of it was placed and compacted to make a pad for the pressure cells. After the pressure cell was bedded on the fine material the conductor cable was encased in a length of 3/8-inch flexible conduit. The pressure cell was then covered with a layer of the passing 1/4-inch screened material, followed by about a foot of rock-free embankment material.

When the pipe segments were manufactured at the pipe plant, a length of 2-inch galvanized iron water pipe with a coupling to the outside was cast into each zone, next to the instrument segment that had soil stress meters. A 4-foot length of 2-inch galvanized iron water pipe was screwed into each coupling before the embankment was carried above the crown. An extension was added to each 2-inch pipe to facilitate finding it for soil stress meter installations after the embankment was complated. When the trenches were dug, the extensions were removed.

A length of 1 1/2-inch pipe was attached to a 10 by 10 by 4-inch metal electrical box. The 1 1/2-inch pipe was inserted into the 2-inch pipe, coming from the RCP, to provide a slip joint. This entire arrangement was supported by a piece of 2 x 4-inch lumber until it could be backfilled. A 1 1/2-inch pipe tee was added to the inside of the box to protect the wires in case the box was crushed. The encased conductors from the pressure cells were run to the bottom of the box and attached by means of a "Tite-Bite" connector. The wires

ClibPDF - www.fastio.com

were run through the tee, leaving a couple of coils of the wire for strain relief in the box, and then down into the culvert where they were connected into the data acquisition system. See Figure 22 for details.

DEFORMATION BALLS

At each of the twelve zones a set of 8 steel spheres were attached to the interior wall of the RCP at the octant points. The steel spheres are 1-inch in diameter, cadmium plated, and have a mounting hole with 1/4-20 female threads. The octant points were measured very carefully and marked. Precise octant points make the readings much easier to obtain. One-half inch diameter holes were drilled into the concrete at the marked locations and lead anchors were set. These anchors accept 1/4 inch-20 threads. A short piece of threaded steel stock was inserted into the anchors. The area around the anchor was built up with epoxy until it conformed to the remainder of the interior wall. A 1/4-20 nut was attached to the threaded stock and screwed down flush with the wall surface as a spacer. The steel ball was then attached to the threaded stock, flush with the nut. A total of 96 individual units were installed. The distance between these measurement units varied from 30 inches to 94 inches. All readings were taken with extendable micrometers and were recorded to the nearest 0.001 inch.

In Zones 1 through 11, the bottom ball is protected from foot traffic by a cover. This cover consists of

ClibPDF - www.fastio.com

a 2 by 2 by 4-inch metal electrical box with a hinge welded to it. This unit was secured to the RCP by two 1/4-inch bolts with lead anchors.

ROTATION BALLS

In Zones 1 through 11 two steel spheres were attached to the interior wall below the springline. It was necessary to install the rotation balls approximately six inches below spring line and 1 1/2-inches out from the walls to facilitate taking rotational readings with a precision level and a 12-inch scale held vertically. The steel balls were attached to a 1 1/2-inch section of 2-inch angle iron with a 1/4 x 20 bolt. A 1/4 x 20 nut was installed between the sphere and the bracket, acting as a spacer. The unit was attached to the wall with two 1/4 x 20 bolts with lead anchors. In addition, some epoxy was used to bond the bracket to the wall.

During the installation, the level tripod was set up and positioned, and the location for each tripod foot was marked and permanently notched with a roto-hammer. All readings were obtained by Office of Structures Personnel. Figures 11 through 21 show the placement of the deformation and rotational balls within the culvert.

SURVEY MONUMENTS

Survey monuments were installed at locations selected by the field research coordinator. A hole slightly larger than the shaft on the monument was drilled into the concrete near the flowline of the culvert at each

ClibPDF - www.fastio.com

monument location. The area was flattened out with an electric impact roto-hammer and thoroughly cleaned. The monument was then cemented into place with epoxy. Standard bronze survey monuments, as supplied by Service and Supply, were used in all installations. The stem was shortened to about 1-inch to avoid hitting the reinforcing steel of the pipe.

READING SCHEDULE

The instrumentation reading was maintained as directed by the Resume' of Research Operations (Cross Canyon Culverts Schedule of Observations). Whenever the contractor's operation interfered with the reading schedule, readings were taken before or after work, or during the lunch hour.

ClibPDF - www.fastio.com

ClibPDF - www.fastio.com

CROSS CANYON CULVERT

PLAN

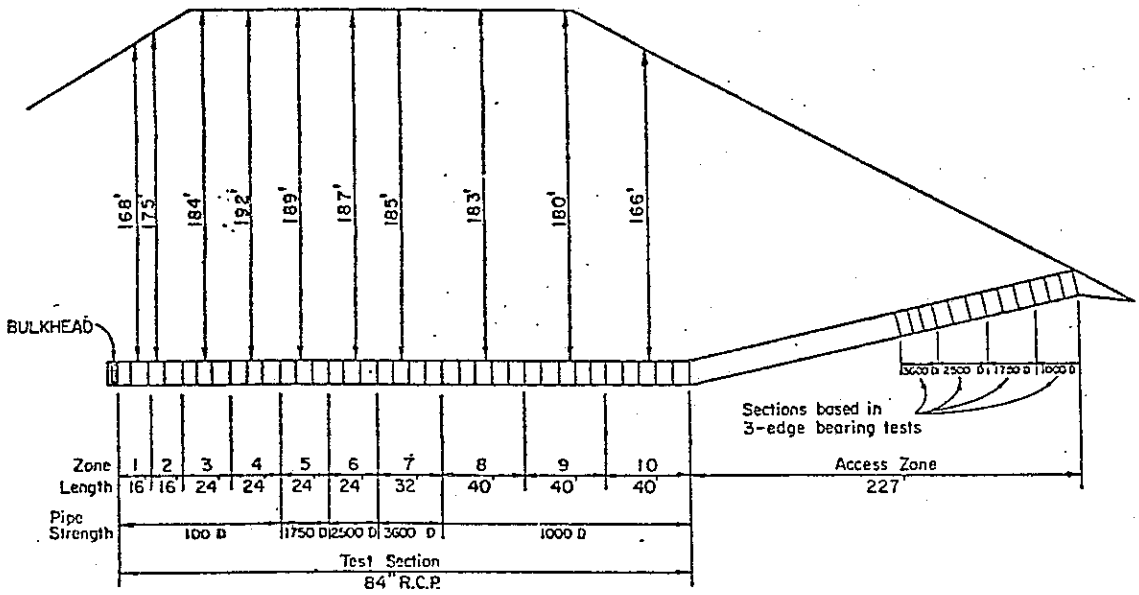

FIGURE 1

ClibPDF - www.fastio.com

ClibPDF - www.fastio.com

CROSS CANYON CULVERT

SEALED FLUID LEVEL SETTLEMENT PLATFORM

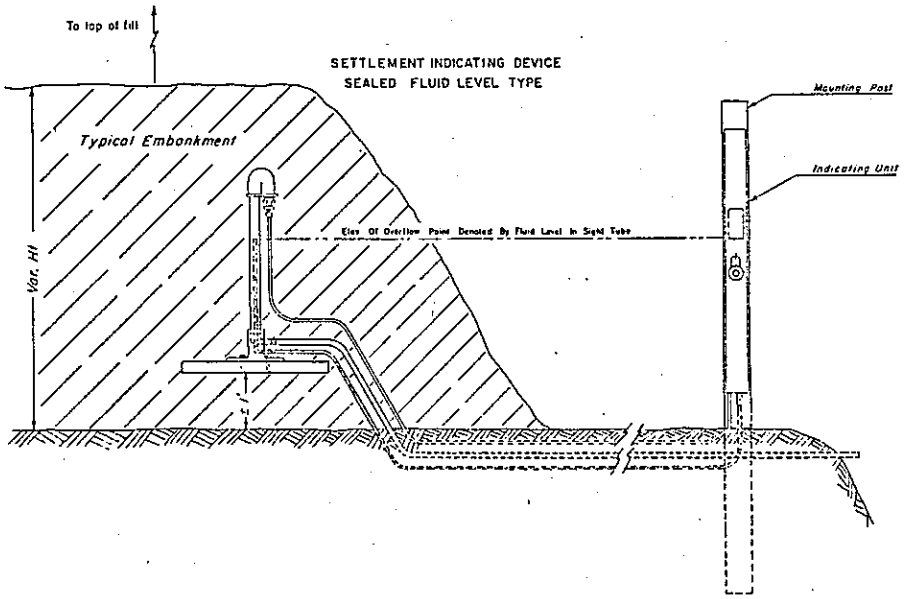

SEALED STANDPIPE UNIT

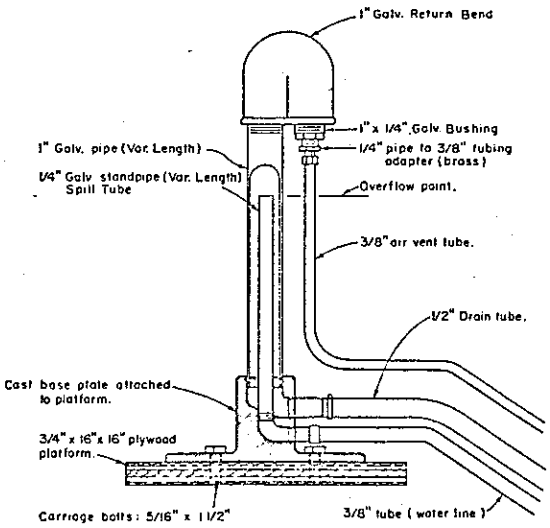

INDICATING UNIT

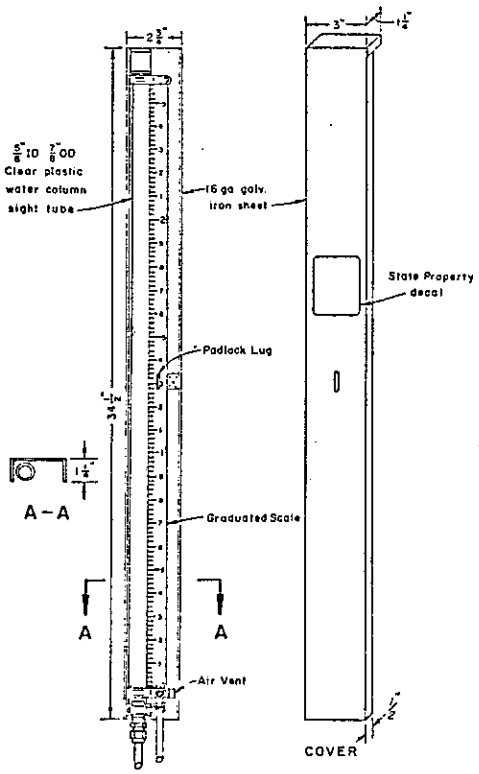

FIGURE 2

ClibPDF - www.fastio.com

ClibPDF - www.fastio.com

CROSS CANYON CULVERT

LEGEND FOR SETTLEMENT PLATFORM LOCATIONS

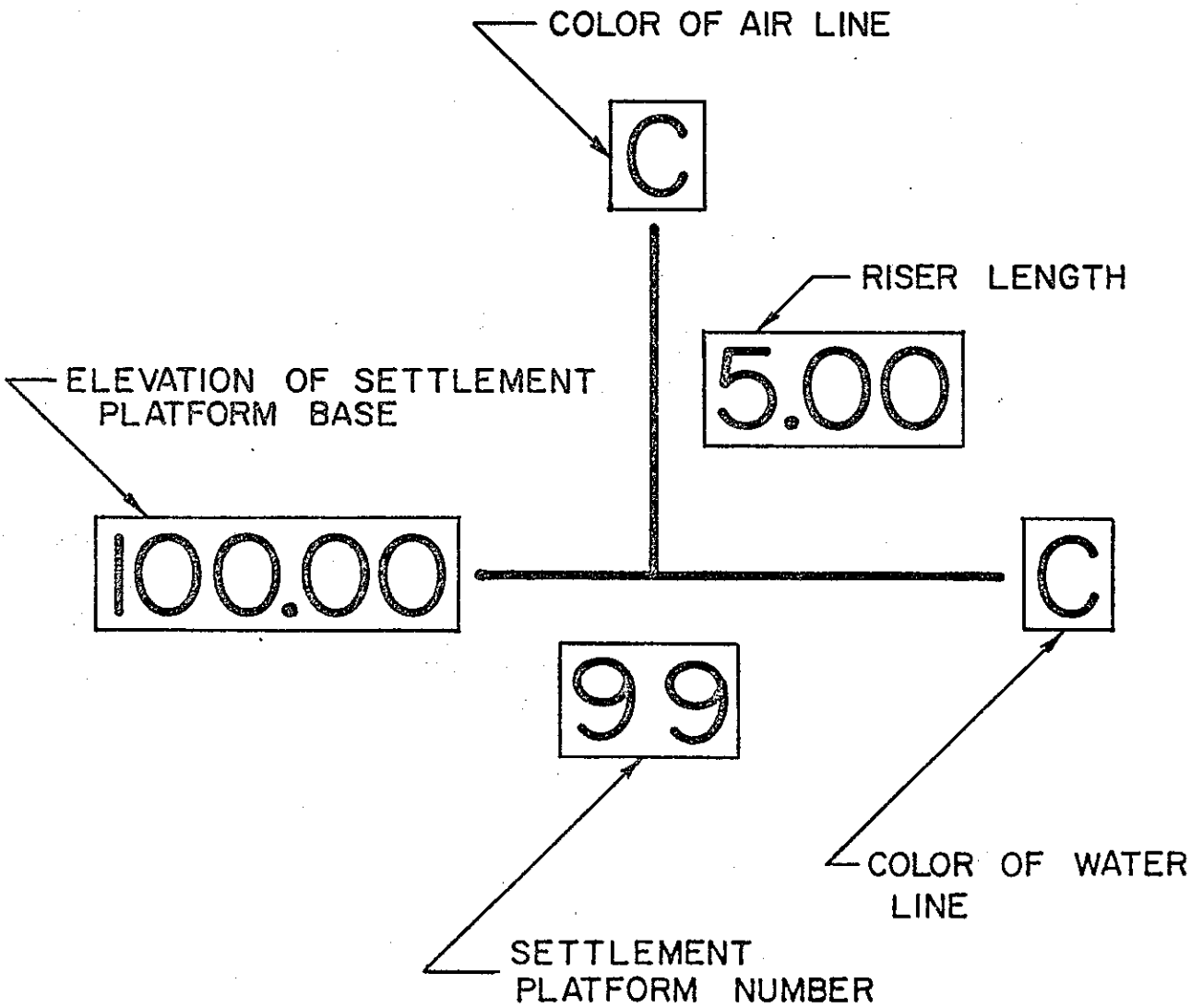

FIGURE 3

ClibPDF - www.fastio.com

ClibPDF - www.fastio.com

CROSS CANYON CULVERT SETTLEMENT PLATFORM LOCATIONS

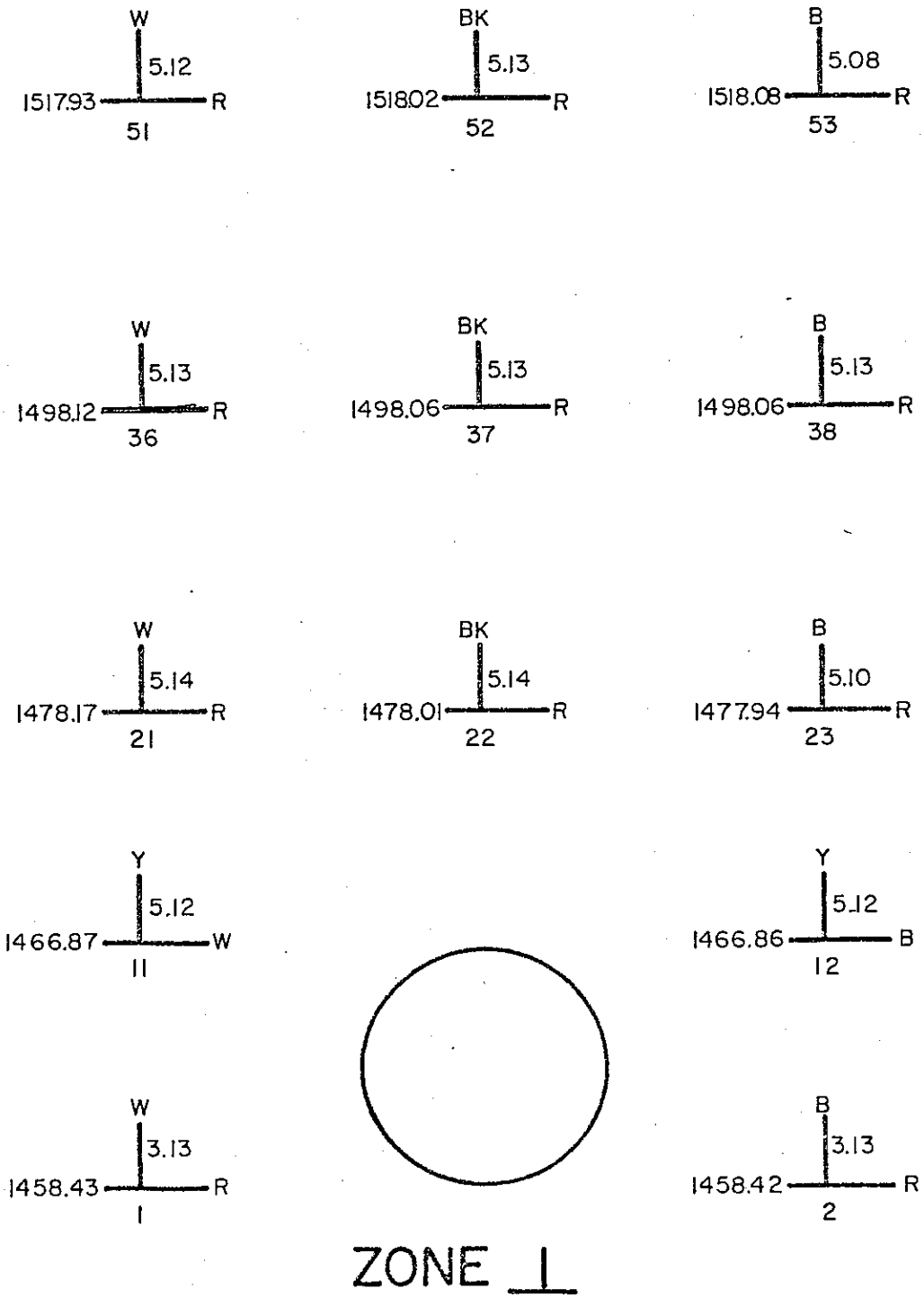

FIGURE 4

ClibPDF - www.fastio.com

ClibPDF - www.fastio.com

CROSS CANYON CULVERT SETTLEMENT PLATFORM LOCATIONS

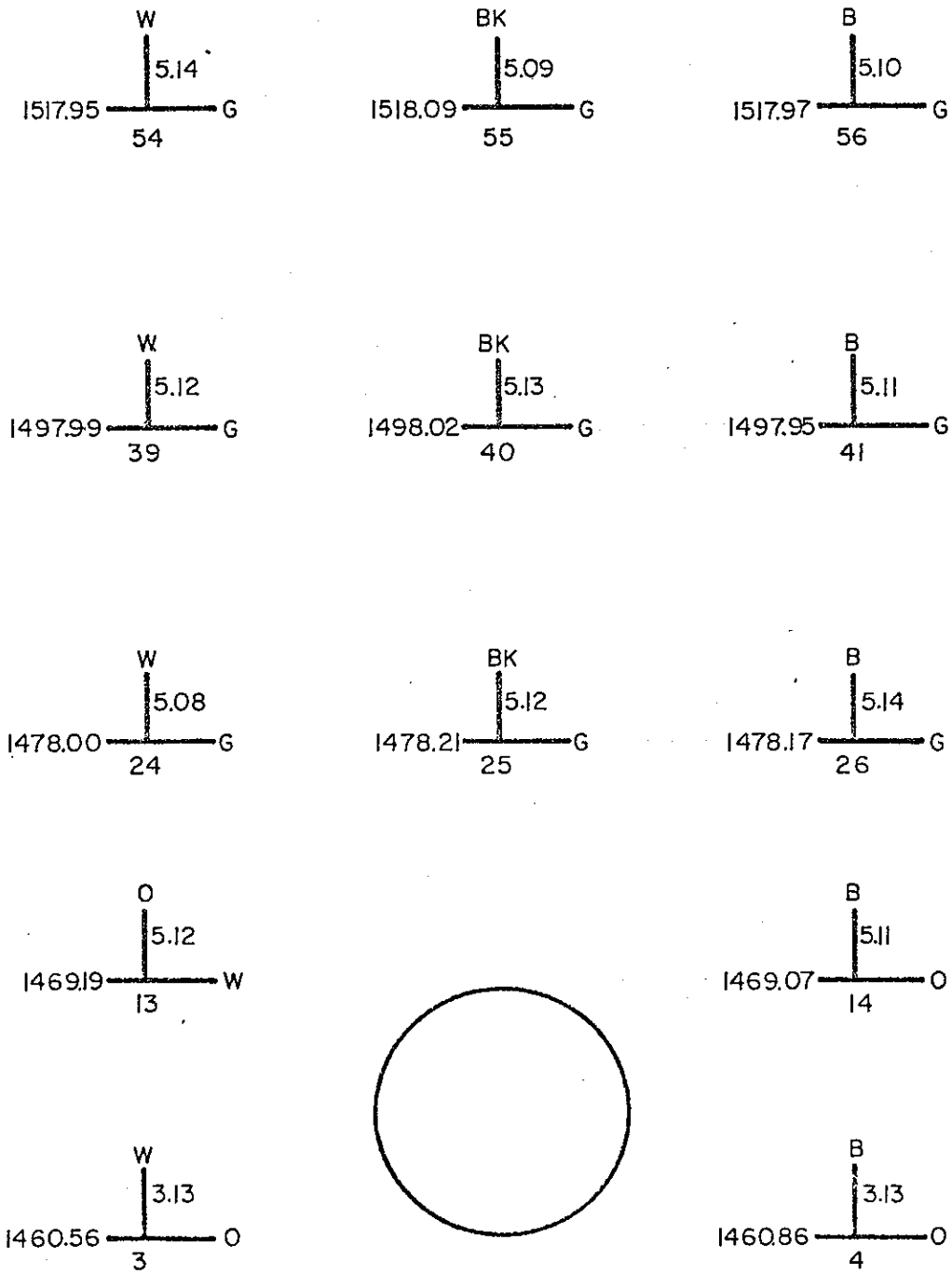

ZONE 4

FIGURE 5

ClibPDF - www.fastio.com

ClibPDF - www.fastio.com

CROSS CANYON CULVERT SETTLEMENT PLATFORM LOCATIONS

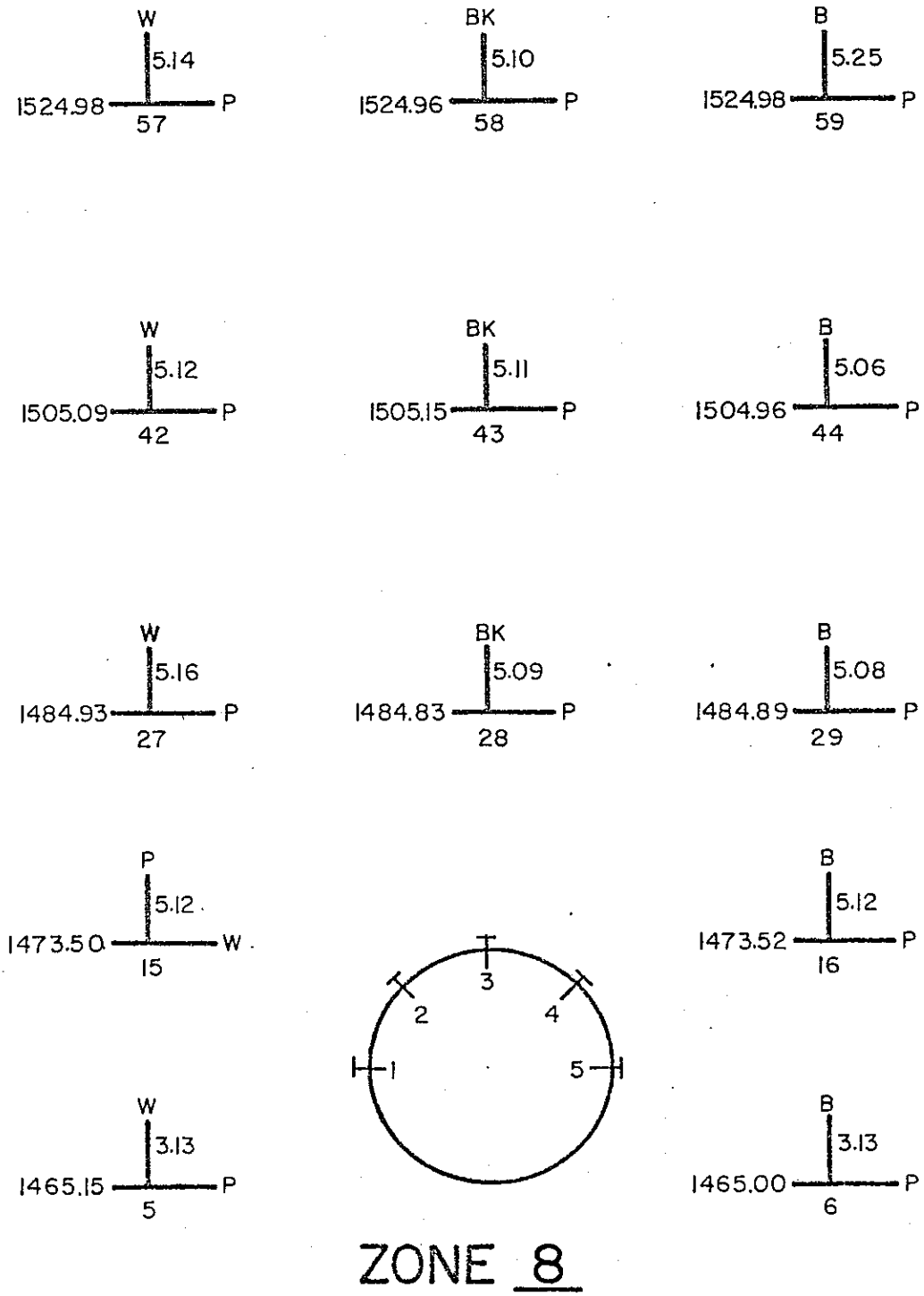

ZONE 8

FIGURE 6

ClibPDF - www.fastio.com

ClibPDF - www.fastio.com

CROSS CANYON CULVERT SETTLEMENT PLATFORM LOCATIONS

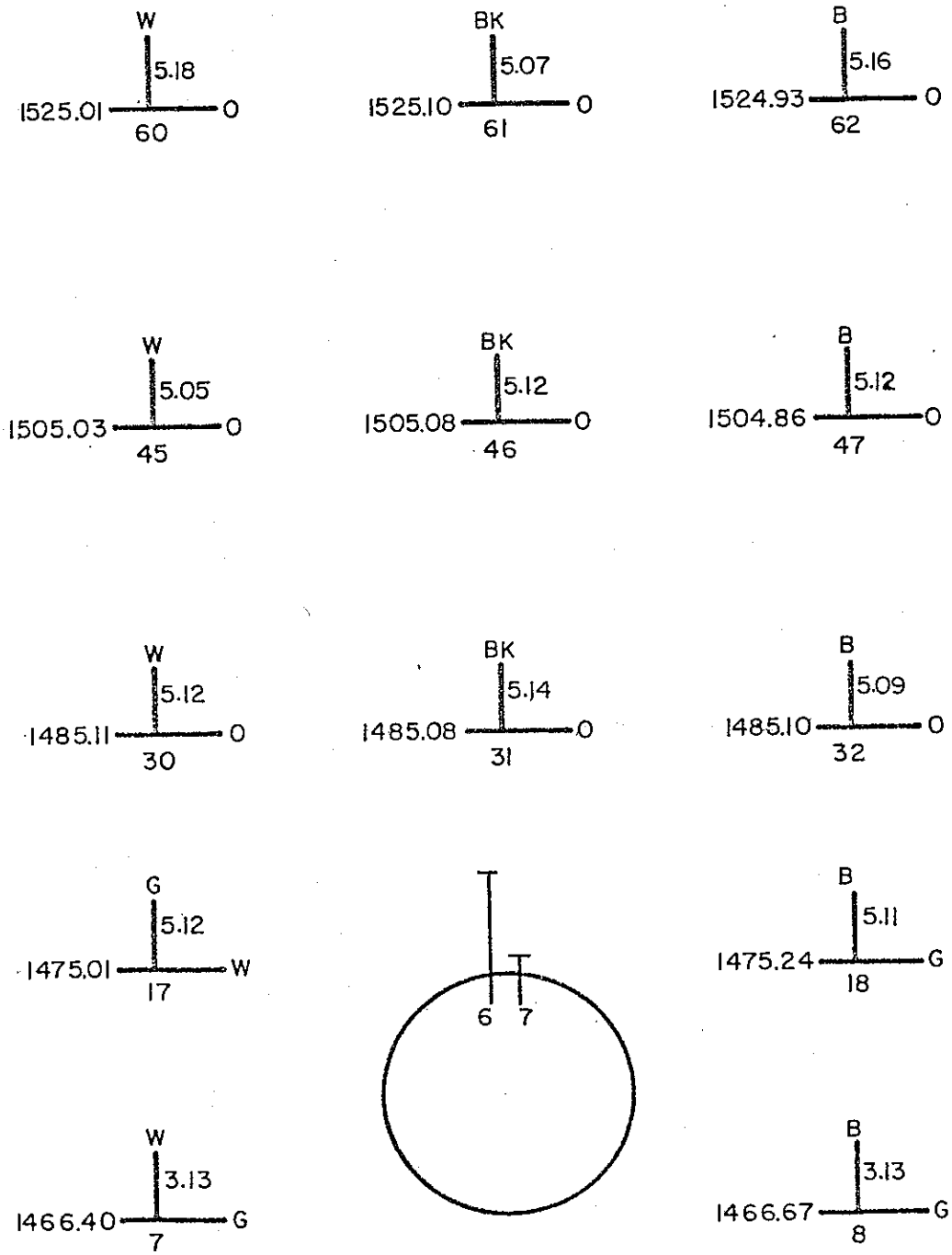

ZONE 9

FIGURE 7

ClibPDF - www.fastio.com

ClibPDF - www.fastio.com

CROSS CANYON CULVERT SETTLEMENT PLATFORM LOCATIONS

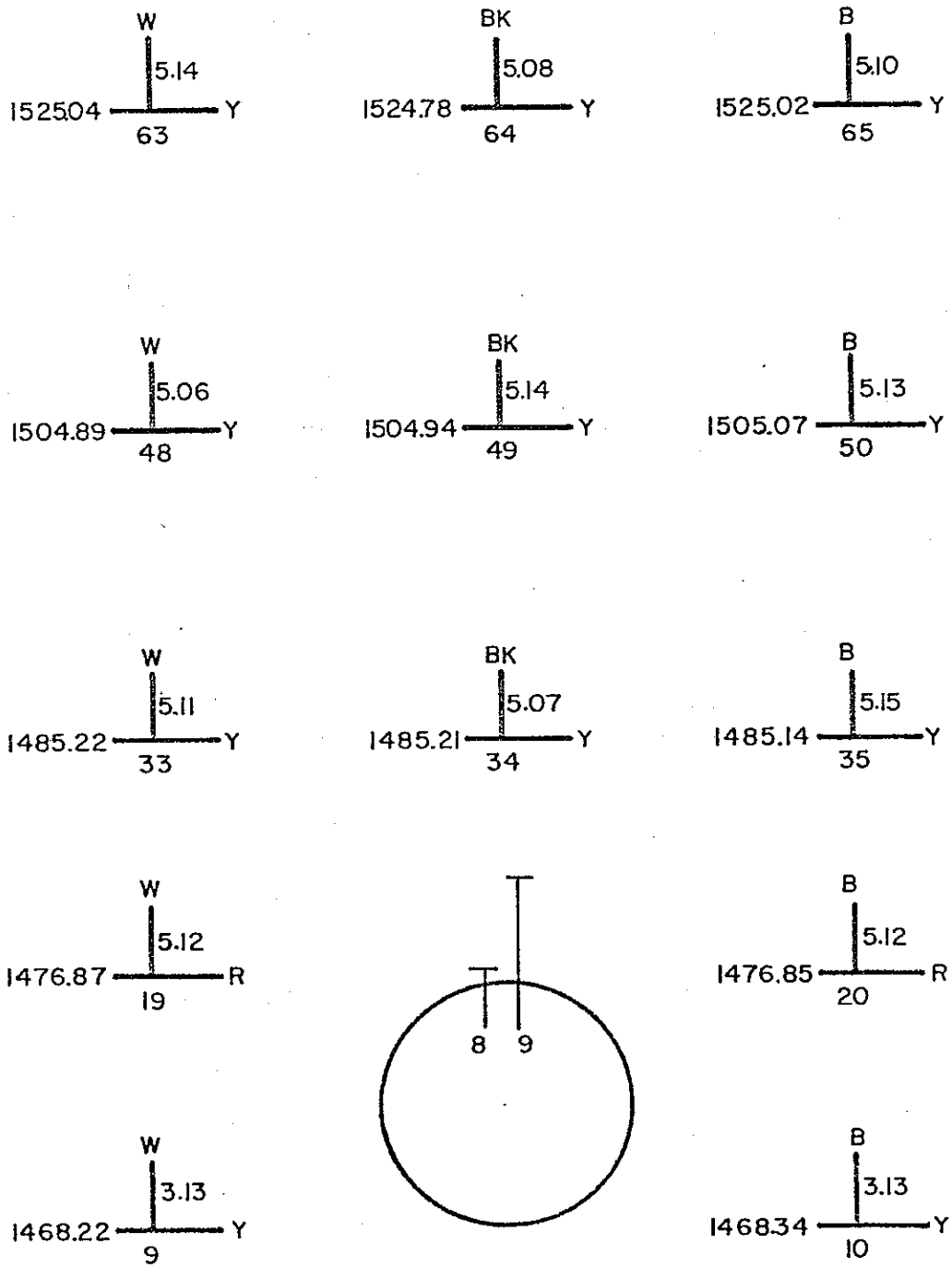

ZONE 10

FIGURE 8

ClibPDF - www.fastio.com

ClibPDF - www.fastio.com

CROSS CANYON CULVERT

SOIL-CONCRETE INTERFACE PRESSURE METER INSTALLATION

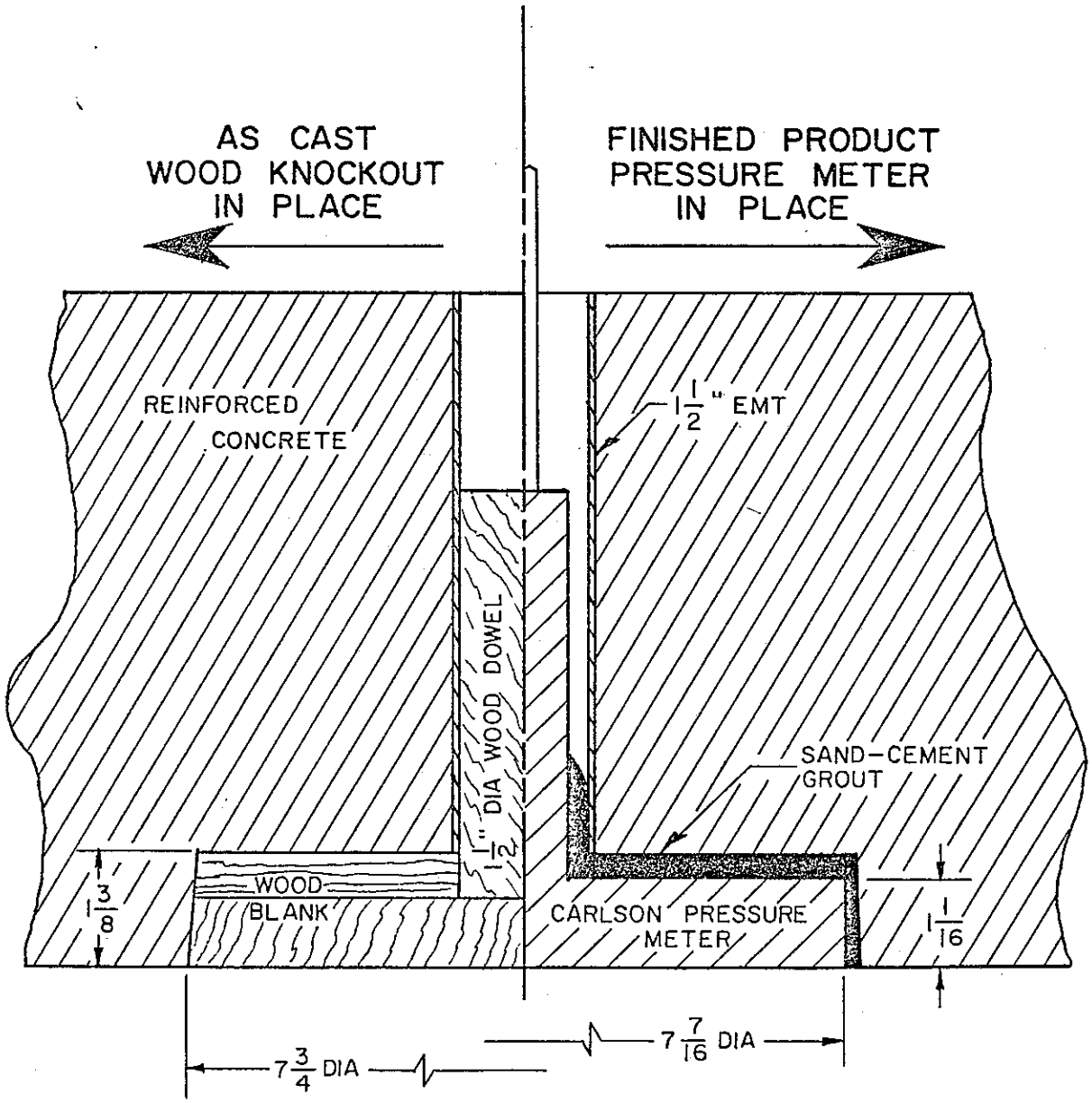

FIGURE 9

ClibPDF - www.fastio.com

ClibPDF - www.fastio.com

CROSS CANYON CULVERT
TYPICAL CABLE RACEWAY
ZONE II

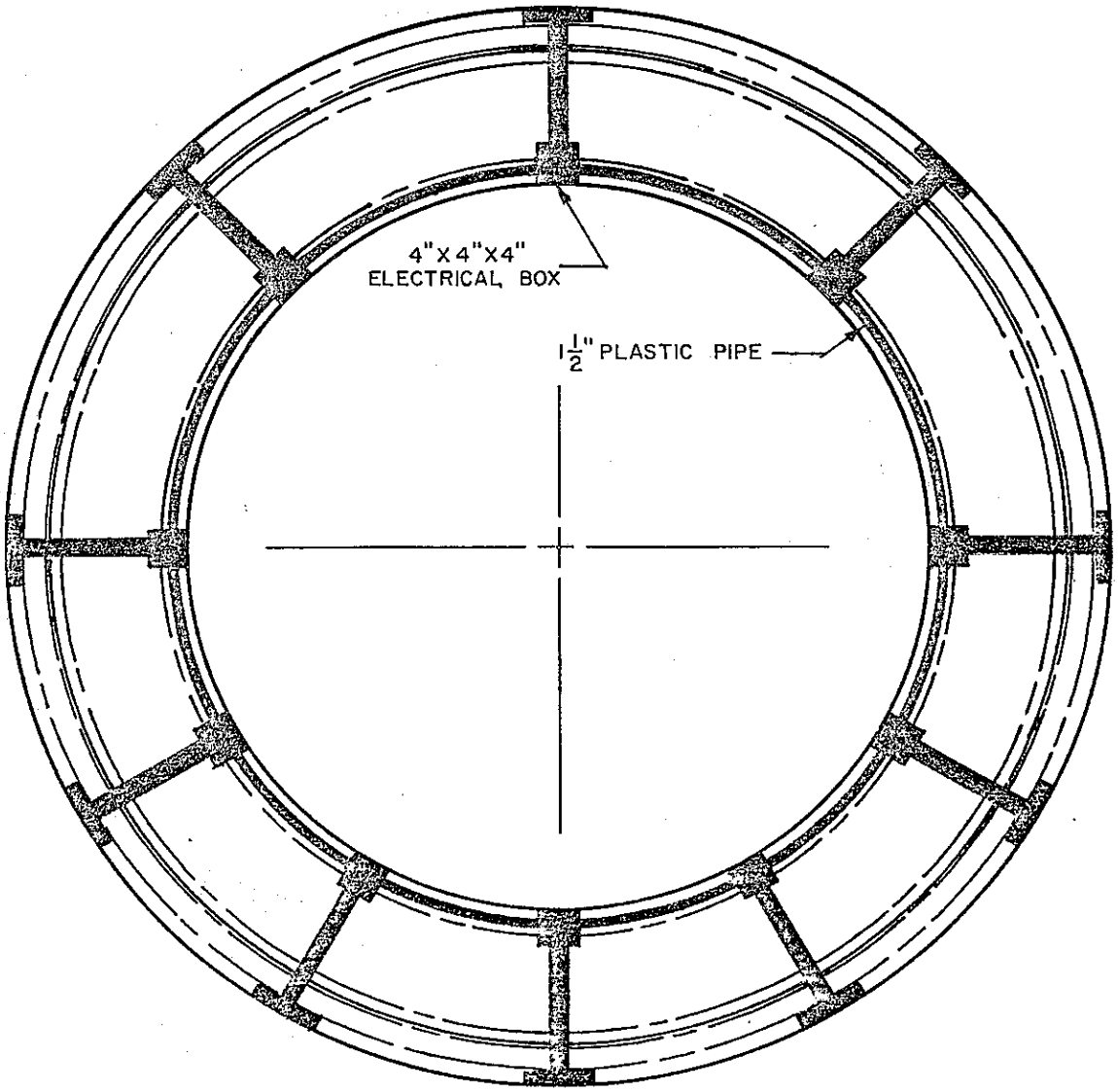

FIGURE 10

ClibPDF - www.fastio.com

ClibPDF - www.fastio.com

CROSS CANYON CULVERT

PRESSURE CELL & STEEL BALL LOCATIONS

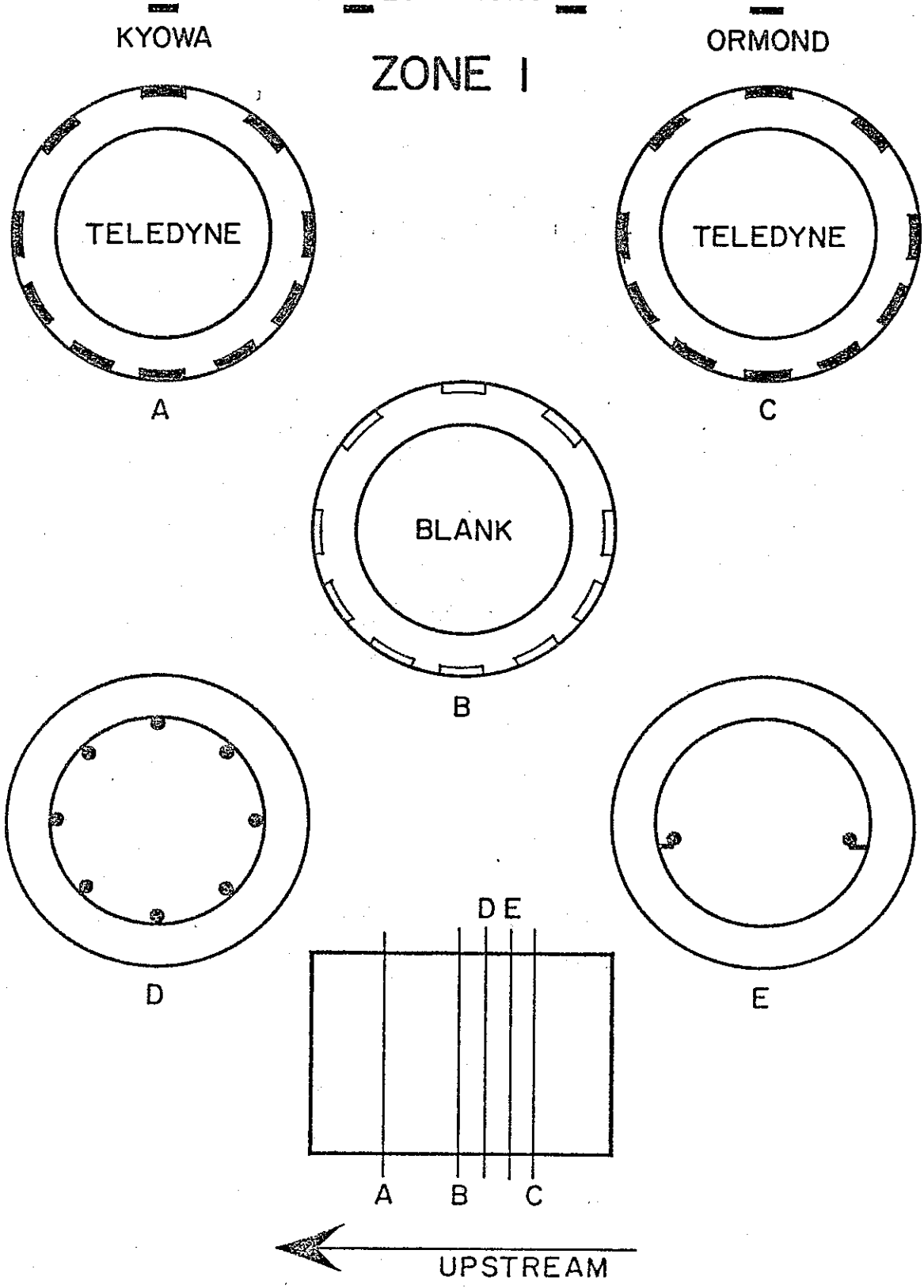

FIGURE II

ClibPDF - www.fastio.com

ClibPDF - www.fastio.com

CROSS CANYON CULVERT

PRESSURE CELL & STEEL BALL LOCATIONS

ZONE 2

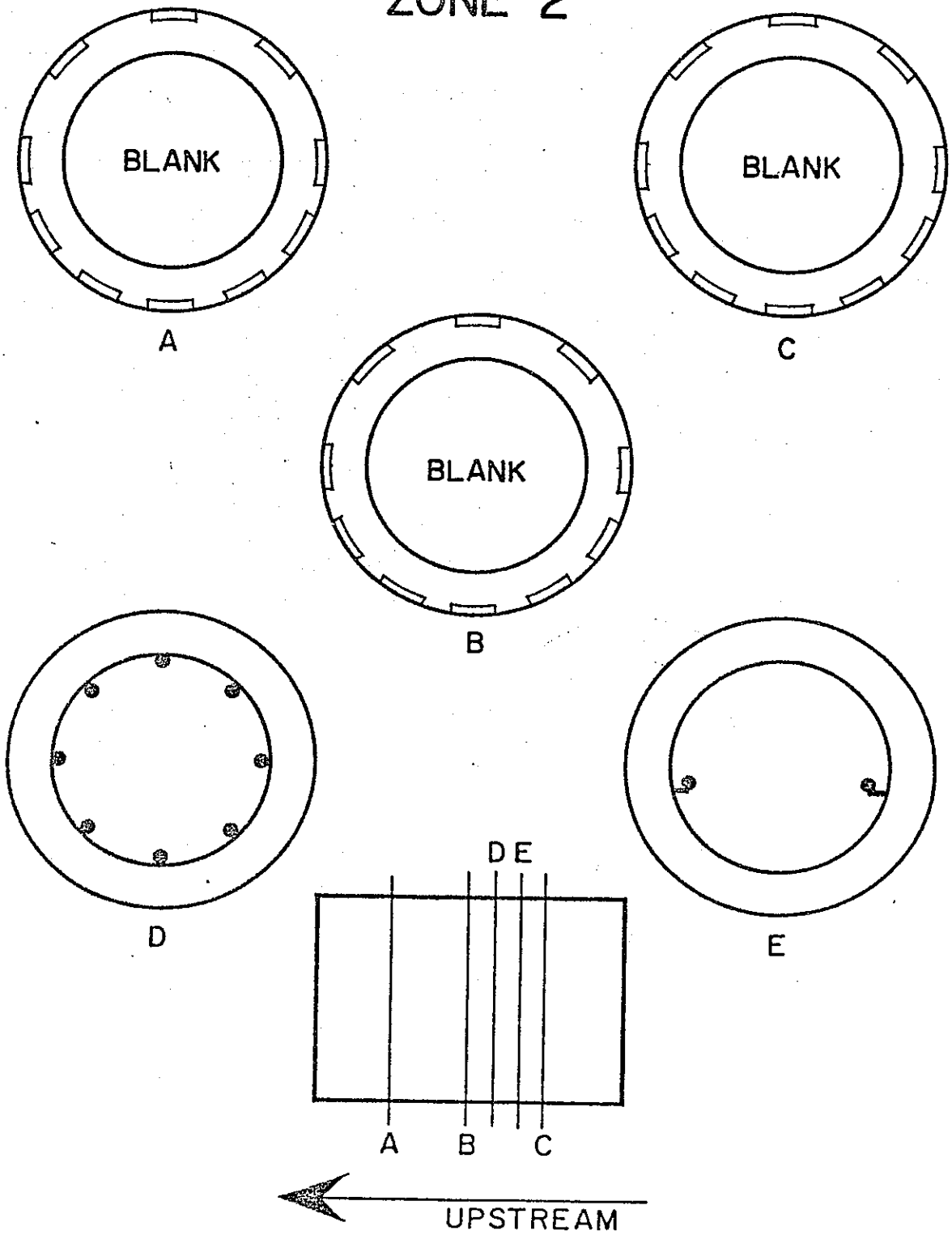

FIGURE 12

ClibPDF - www.fastio.com

ClibPDF - www.fastio.com

CROSS CANYON CULVERT

PRESSURE CELL & STEEL BALL LOCATIONS

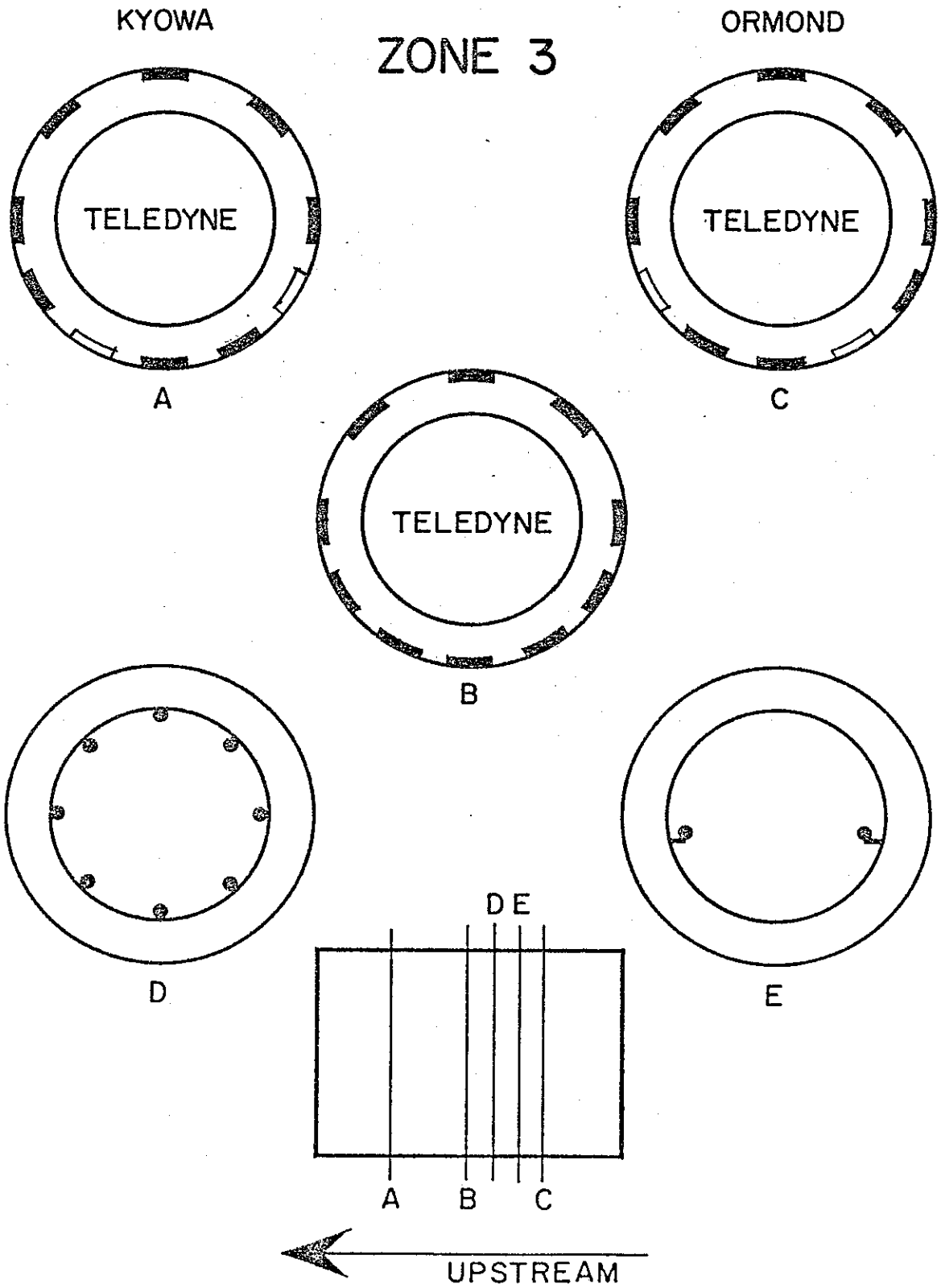

FIGURE 13

ClibPDF - www.fastio.com

ClibPDF - www.fastio.com

CROSS CANYON CULVERT

PRESSURE CELL & STEEL BALL LOCATIONS

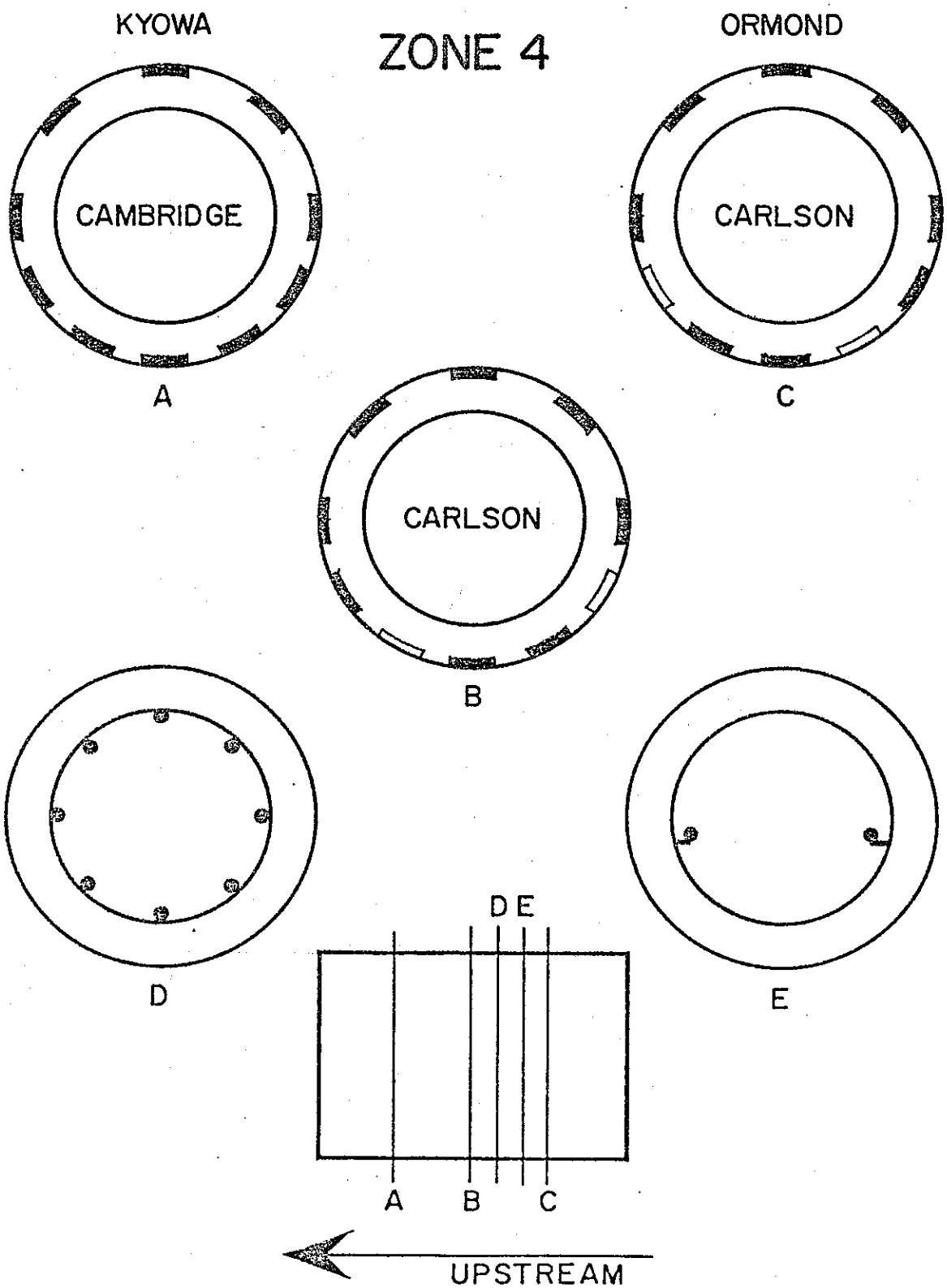

FIGURE 14

ClibPDF - www.fastio.com

ClibPDF - www.fastio.com

CROSS CANYON CULVERT

PRESSURE CELL & STEEL BALL LOCATIONS

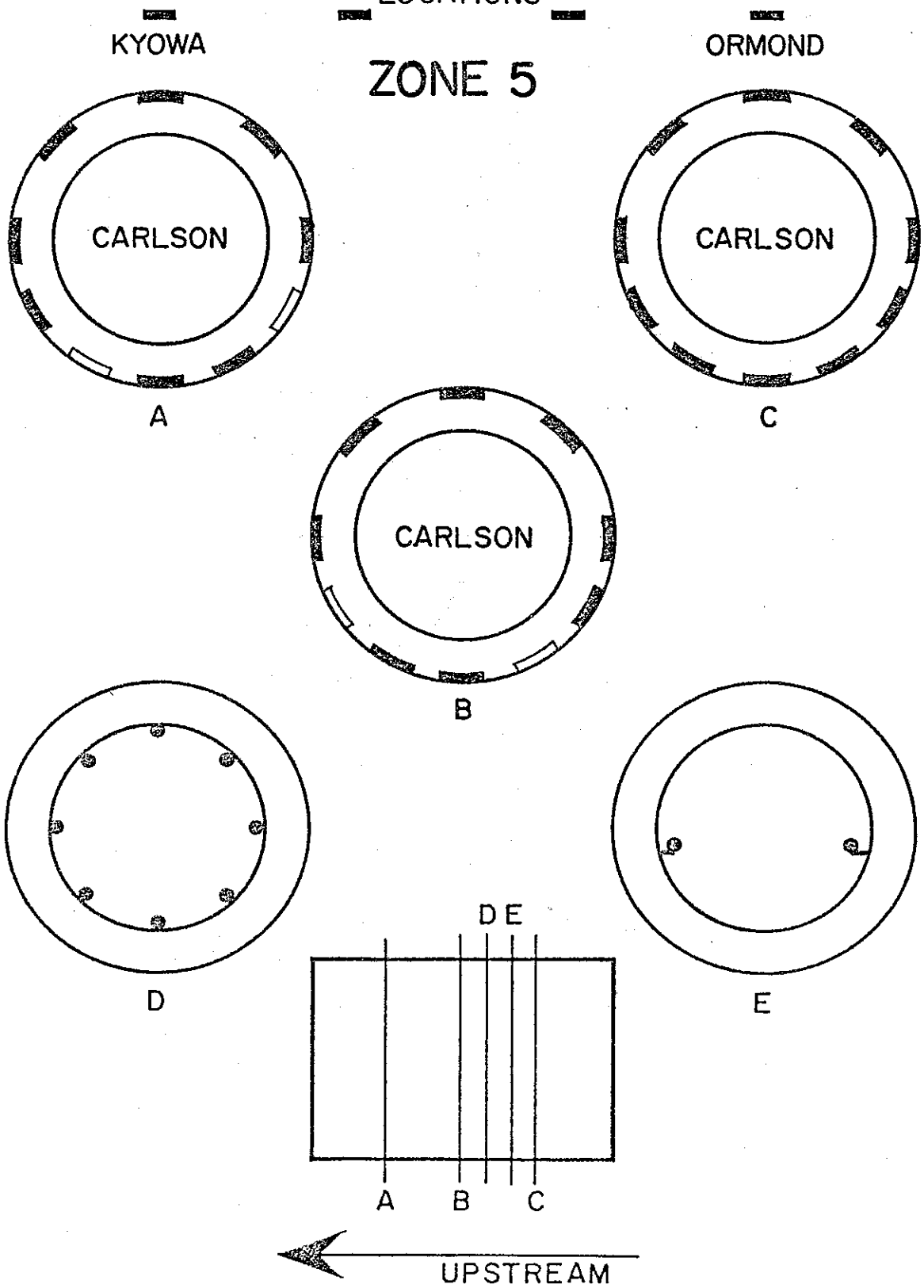

FIGURE 15

ClibPDF - www.fastio.com

ClibPDF - www.fastio.com

CROSS CANYON CULVERT

PRESSURE CELL & STEEL BALL LOCATIONS

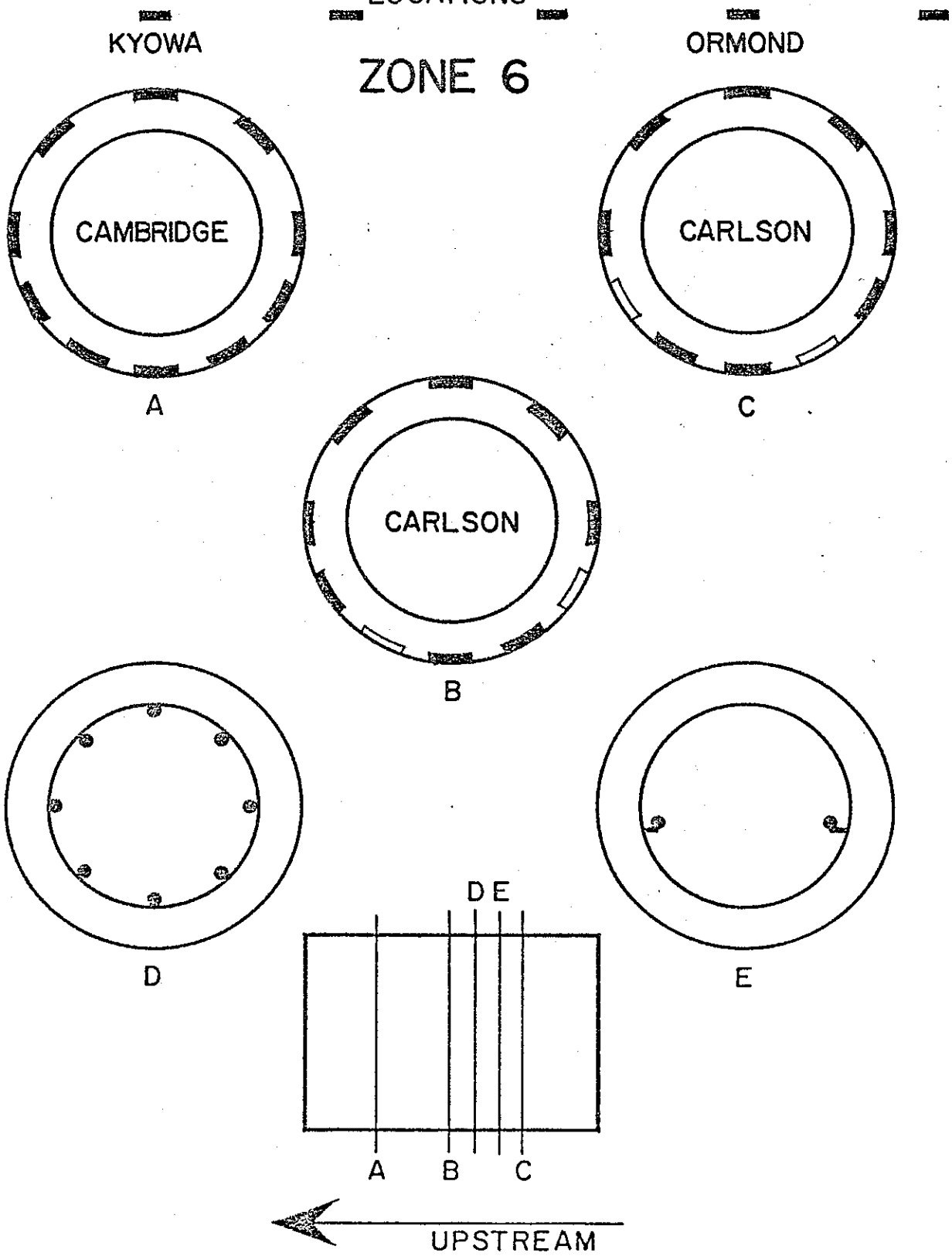

FIGURE 16

ClibPDF - www.fastio.com

ClibPDF - www.fastio.com

CROSS CANYON CULVERT

PRESSURE CELL & STEEL BALL LOCATIONS

ZONE 7

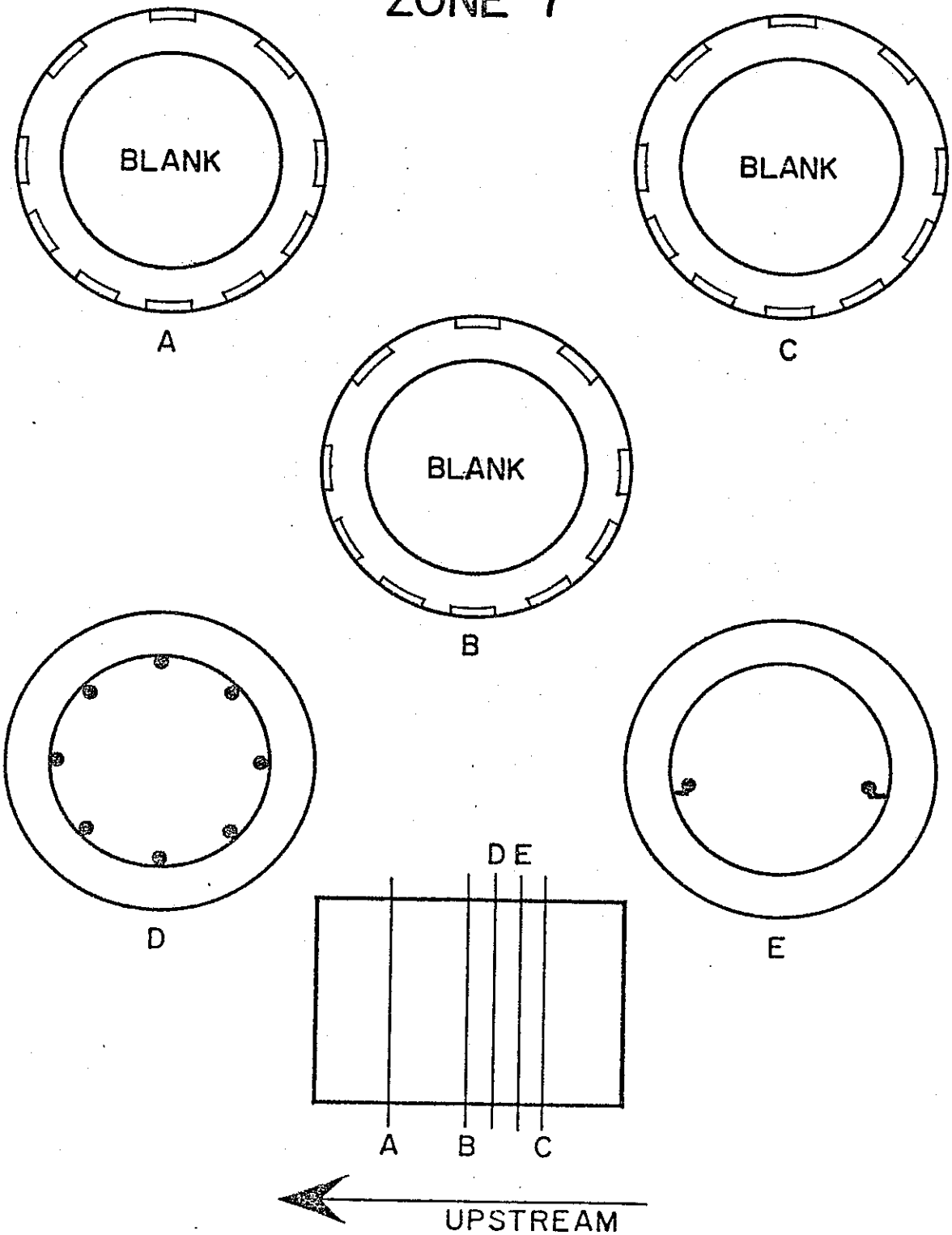

FIGURE 17

ClibPDF - www.fastio.com

ClibPDF - www.fastio.com

CROSS CANYON CULVERT

PRESSURE CELL & STEEL BALL LOCATIONS

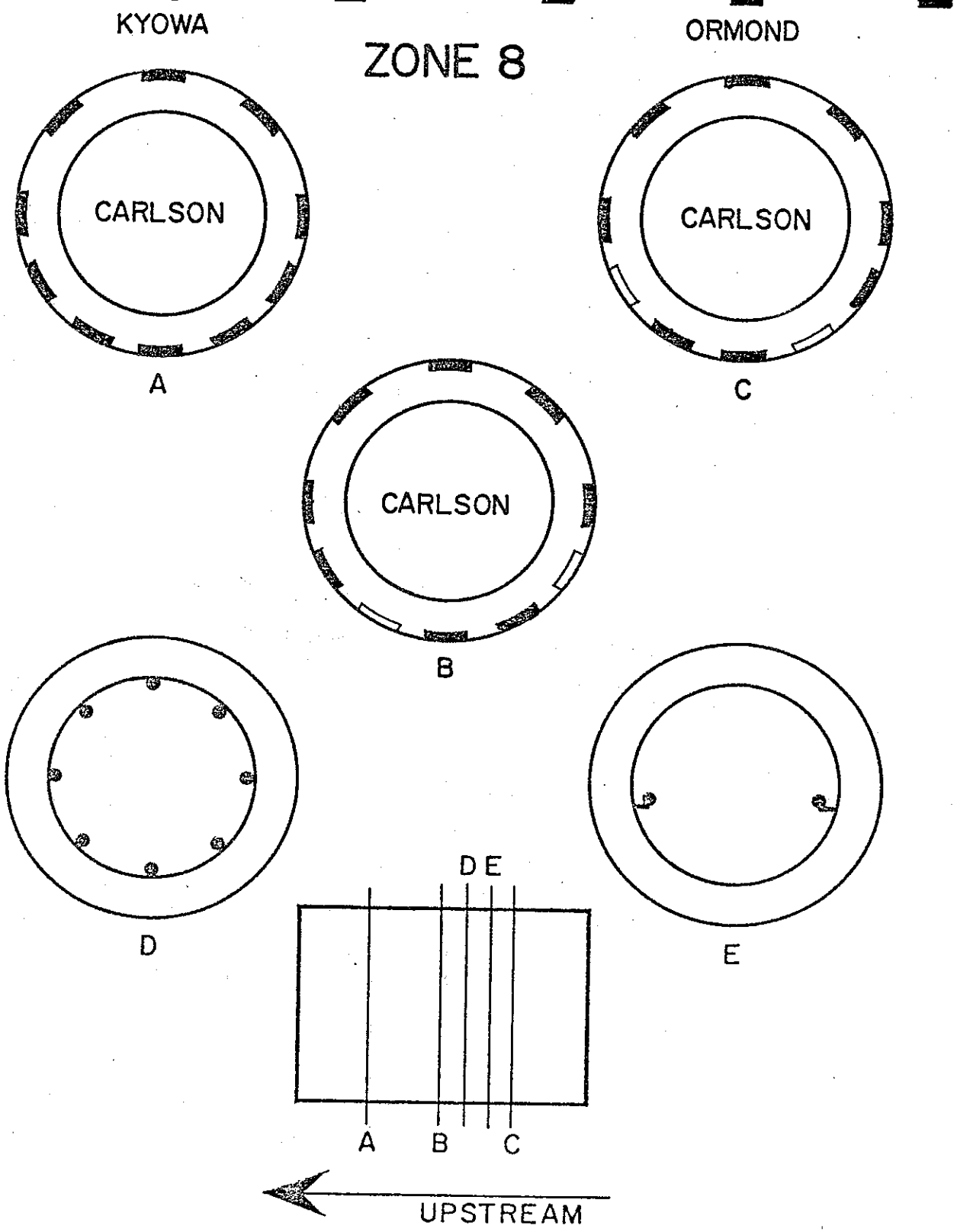

FIGURE 18

ClibPDF - www.fastio.com

ClibPDF - www.fastio.com

CROSS CANYON CULVERT

PRESSURE CELL & STEEL BALL LOCATIONS

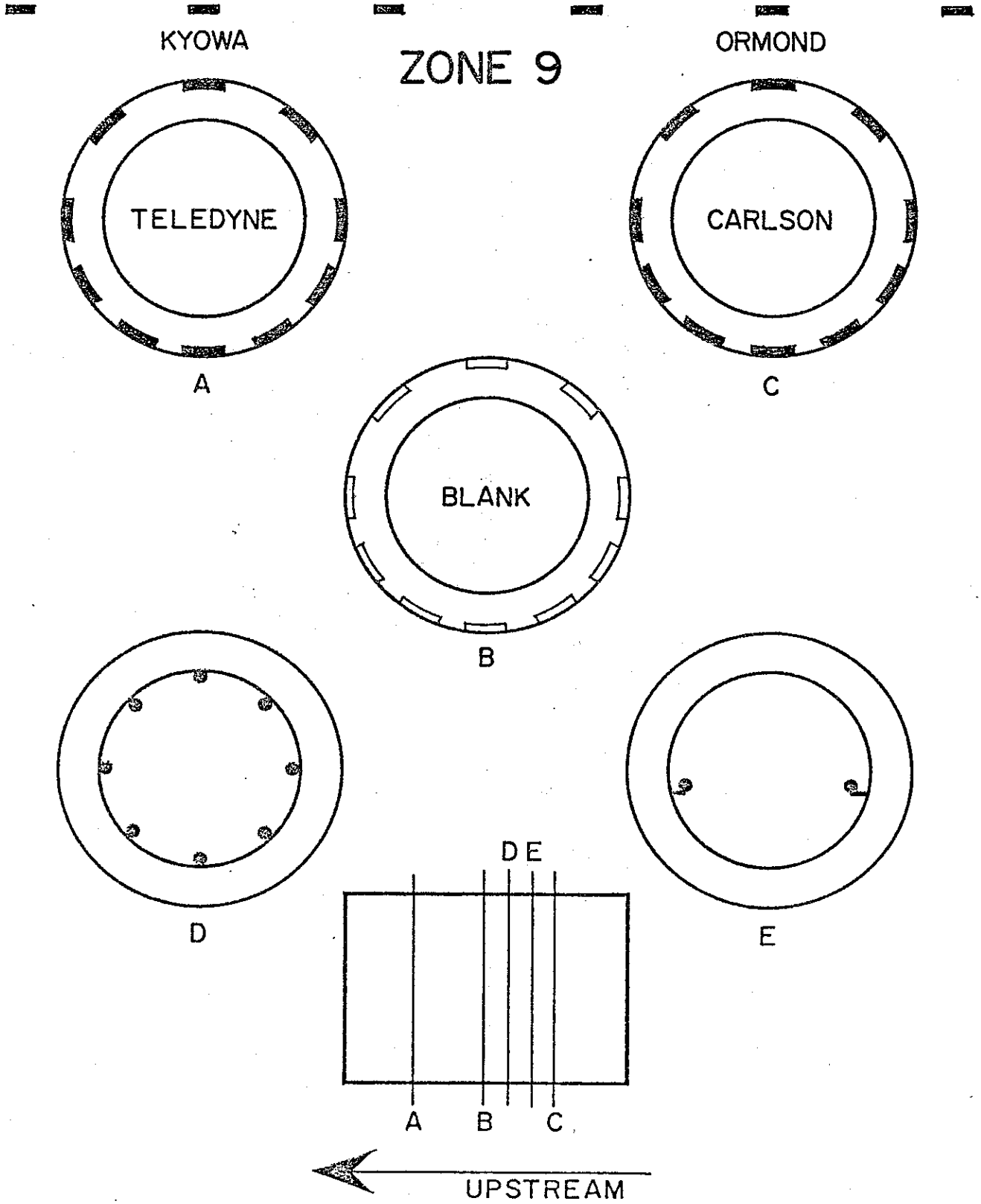

FIGURE 19

ClibPDF - www.fastio.com

ClibPDF - www.fastio.com

CROSS CANYON CULVERT

PRESSURE CELL & STEEL BALL LOCATIONS

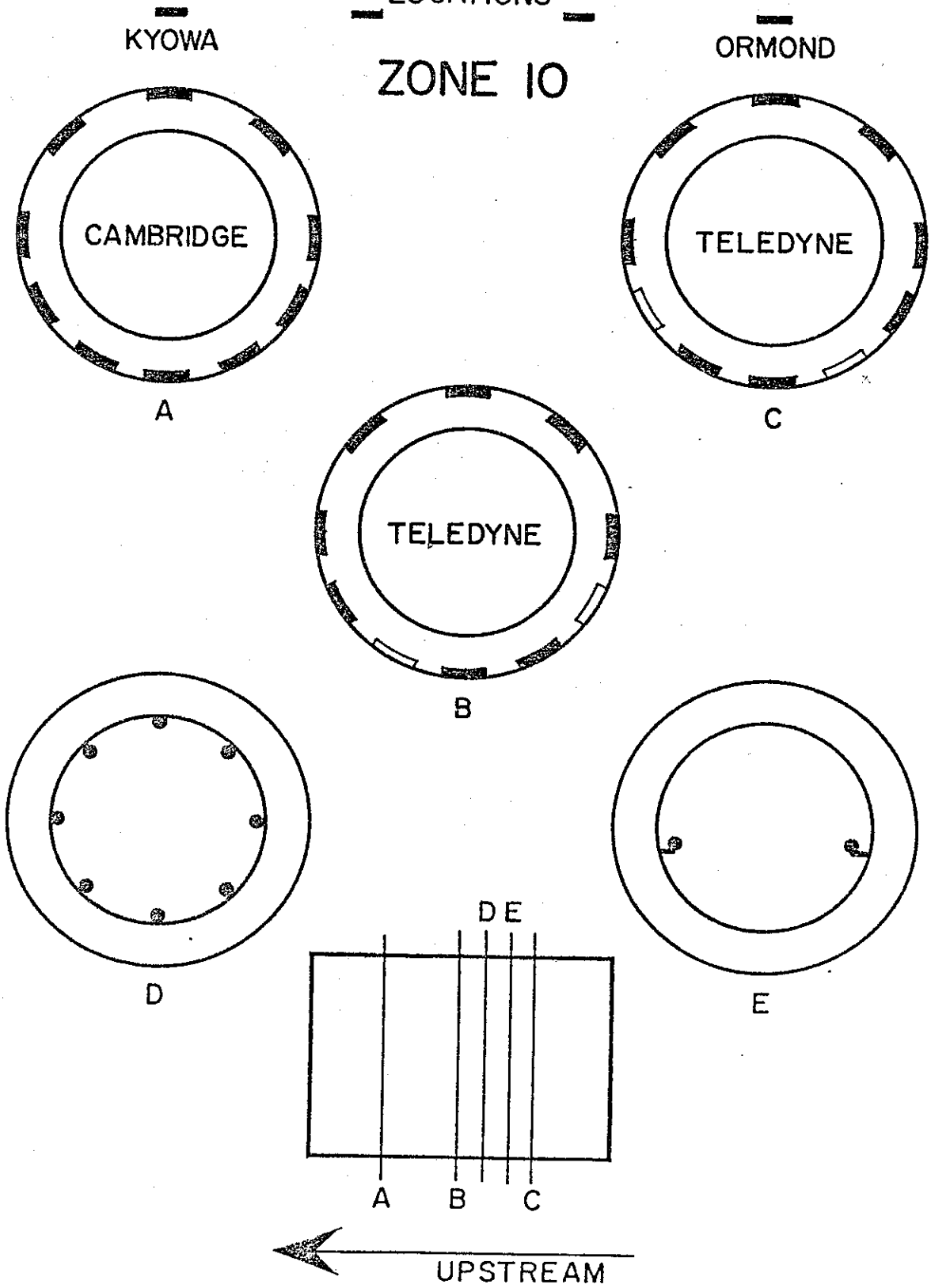

FIGURE 20

ClibPDF - www.fastio.com

ClibPDF - www.fastio.com

CROSS CANYON CULVERT

PRESSURE CELL & STEEL BALL LOCATIONS

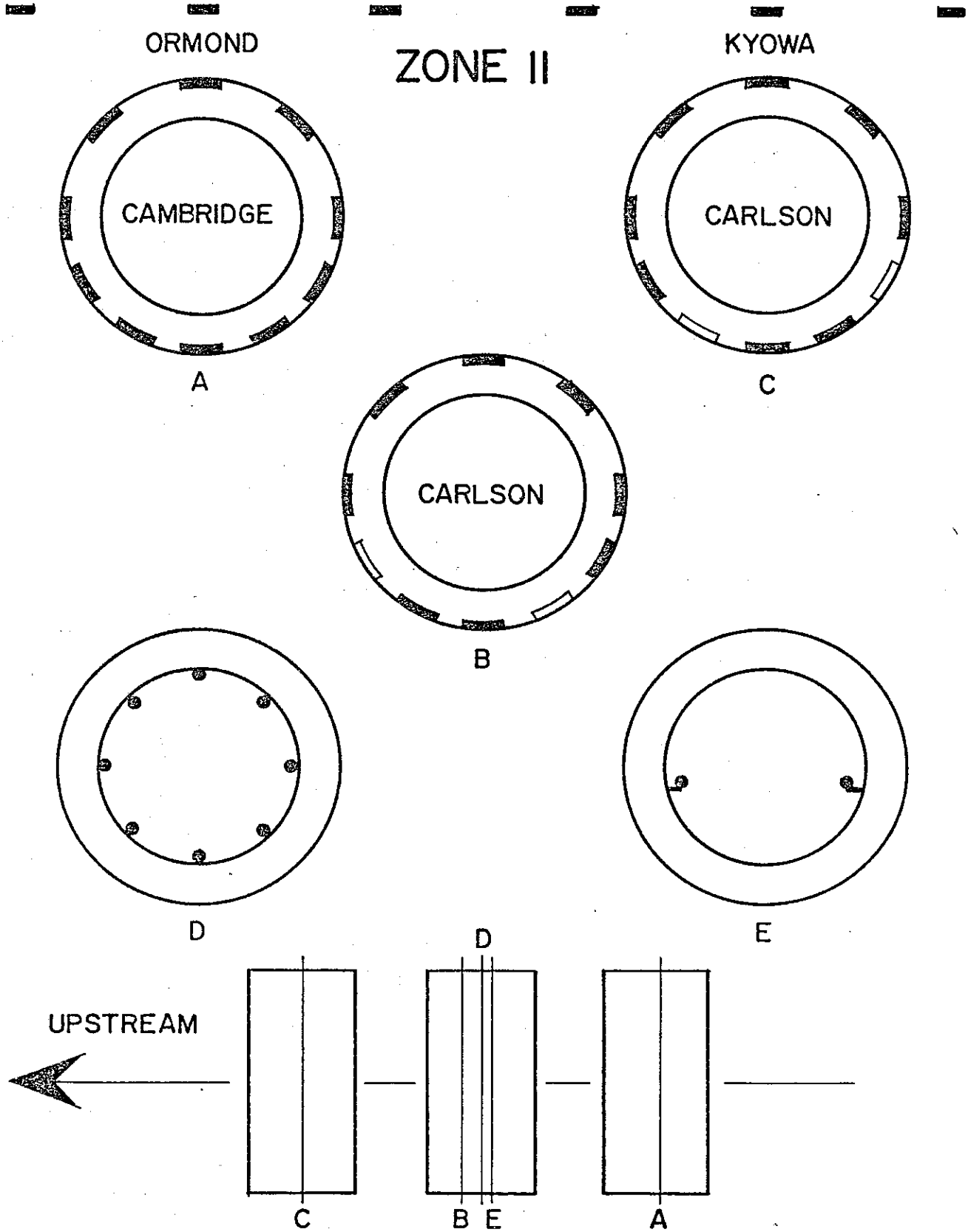

FIGURE 21

ClibPDF - www.fastio.com

ClibPDF - www.fastio.com

CROSS CANYON CULVERT
JUNCTION BOX CONNECTIONS FOR EMBANKMENT PRESSURE CELL LEADS

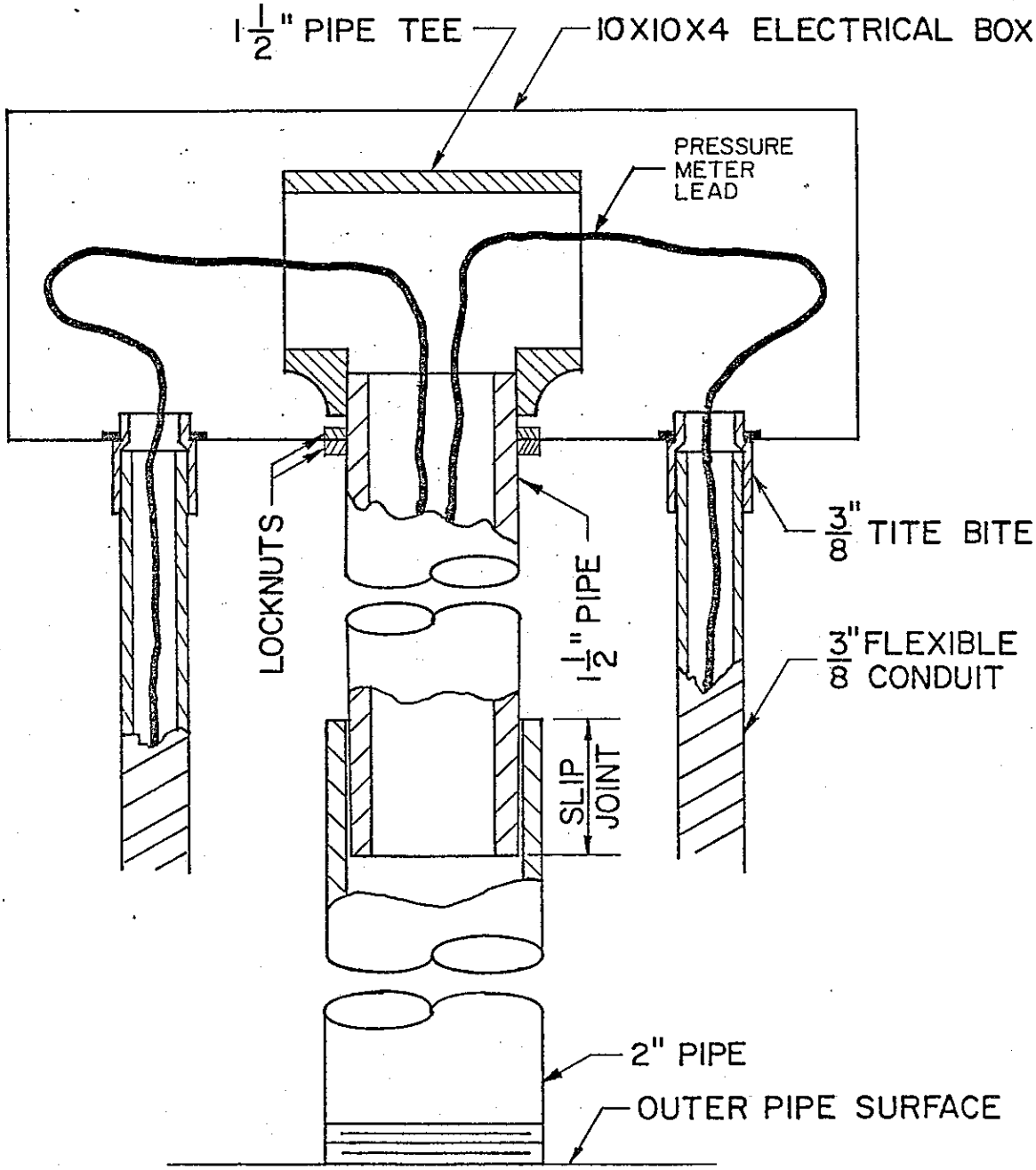

FIGURE 22

ClibPDF - www.fastio.com

ClibPDF - www.fastio.com