CALIFORNIA DIVISION OF HIGHWAYS
TRANSPORTATION LABORATORY
RESEARCH REPORT

Design and Development of A Mobile Air Quality Monitoring Van for Highway Environmental Impact Studies

74-35

INTERIM REPORT

CA-DOT-TL-7032-8-74-35
SEPTEMBER 1974

Caltrans
CALIFORNIA DEPARTMENT OF TRANSPORTATION

ClibPDF - www.fastio.com

ClibPDF - www.fastio.com

TECHNICAL REPORT STANDARD TITLE PAGE

1. REPORT NO	2. GOVERNMENT ACCESSION NO.	3. RECIPIENT'S CATALOG NO

4. TITLE AND SUBTITLE	5. REPORT DATE
Design and Development of a Mobile Air Quality Monitoring Van for Highway Environmental Impact Studies	September, 1974
	6. PERFORMING ORGANIZATION CODE
7. AUTHOR(S)	8. PERFORMING ORGANIZATION REPORT NO
Pinkerman, K. O., Ranzieri, A. J. and Shirley, E. C.	CA-DOT-TL-7082-8-74-35
9. PERFORMING ORGANIZATION NAME AND ADDRESS	10. WORK UNIT NO
Transportation Laboratory 5900 Folsom Boulevard Sacramento, California 95819	11. CONTRACT OR GRANT NO
12. SPONSORING AGENCY NAME AND ADDRESS	13. TYPE OF REPORT & PERIOD COVERED
California Department of Transportation Division of Highways Sacramento, California 95807	Interim
	14. SPONSORING AGENCY CODE

15. SUPPLEMENTARY NOTES

16. ABSTRACT

Field data on ambient air pollution levels are required for the writing of a quantitative air quality report. A description of the design and development of an air monitoring van for assessing ambient levels of air pollution is presented. Methods for data acquisition and equipment calibration are also discussed. A review of van design after two years of field usage is included.

17. KEY WORDS	18. DISTRIBUTION STATEMENT
Mobile air monitoring van, ambient air quality, air pollution, instrumentation	Unlimited

19. SECURITY CLASSIF. (OF THIS REPORT)	20. SECURITY CLASSIF. (OF THIS PAGE)	21. NO. OF PAGES	22. PRICE
Unclassified	Unclassified		

DMRT 1242 ORIG. 9/72

ClibPDF - www.fastio.com

ClibPDF - www.fastio.com

STATE OF CALIFORNIA
DEPARTMENT OF TRANSPORTATION
DIVISION OF CONSTRUCTION AND RESEARCH
TRANSPORTATION LABORATORY

September, 1974

CA-DOT-TL-7082-8-74-35

Mr. Robert J. Datel
Chief Engineer

Dear Sir:

I have approved and now submit for your information this State financed interim research project report titled:

DESIGN AND DEVELOPMENT OF A MOBILE AIR

QUALITY MONITORING VAN FOR HIGHWAY

ENVIRONMENTAL IMPACT STUDIES

Study made by .....Environmental Improvement Section

Under the Supervision of.....E. C. Shirley, P. E.

Principal Investigator.....A. J. Ranzieri, P. E.

Report Prepared by.....K. O. Pinkerman, P. E.

Very truly yours,

JOHN L. BEATON
Chief Engineer, Transportation Laboratory

Attachment

ClibPDF - www.fastio.com

ClibPDF - www.fastio.com

TABLE OF CONTENTS

	Page
INTRODUCTION	1
VEHICLE DESCRIPTION	2
Basic Vehicle	2
Vehicle Modifications	2
Fiberglass Top	2
Spare Tire Rack	3
Trailer Hitch	3
Windows	3
Paint	3
Air Conditioning	3
Floor Covering	4
Wall Covering	5
Power Generator	5
Generator Enclosure	6
Cabinets and Instrument Racks	8
Power Wiring	12
SAMPLE FLOW SYSTEM	15
ANALYZERS	18
Carbon Monoxide Analyzer	18
Ozone Analyzer	21
Nitric Oxide and Nitrogen Dioxide Analyzer	24
Hydrocarbon Analyzer	29
Particulate Sampling	29
METEOROLOGICAL SENSORS	31
DATA ACQUISITION	33
CALIBRATION	36
DESIGN IN RETROSPECT	41
APPENDIX I - Parts List	44
APPENDIX II - Drawings List	48
Appendix III - Operation Procedures	50

ClibPDF - www.fastio.com

ClibPDF - www.fastio.com

Disclaimer

Product names and manufacturers listed are not a recommendation for any specific brands by the California Department of Transportation. Many manufacturers make equipment in the areas discussed and their product may be equivalent or superior to those mentioned herein.

ClibPDF - www.fastio.com

ClibPDF - www.fastio.com

ACKNOWLEDGMENTS

The author wishes to acknowledge the design contributions and construction efforts of Robert Breazile, Instrument Technician - Air Sanitation, Environmental Improvement Section and the efforts expended by the Transportation Laboratory Tool and Instrument Shop in assisting in the van construction.

The contents of this report reflect the views of the State of California, Department of Transportation, Division of Highways, Transportation Laboratory which is responsible for the accuracy of the data presented herein. The contents do not necessarily reflect the official views or policy of the State of California. This report does not constitute a standard, specification or regulation.

ClibPDF - www.fastio.com

ClibPDF - www.fastio.com

INTRODUCTION

With the passage of the National Environmental Policy Act of 1969 and the subsequent adoption of the Federal Aid Highway Act of 1970, the need was created for a means of assessing the impact of future highway construction on the environment. An important factor is the impact on air quality.

One aspect of a logical method[1] for predicting future air quality levels involves a study of ambient air quality in the project area. To accomplish this study in detail, a mobile unit that can work many sampling sites while minimizing relocating costs and related delays is of great assistance.

This report describes an approach to a self-sufficient mobile air quality laboratory for monitoring ambient concentrations of carbon monoxide, ozone, oxides and nitrogen, reactive hydrocarbons, and particulates. Basic wind information is also provided.

Vehicle selection and modification is discussed in detail as well as the principles of analyzer operation and their required support systems.

Calibration, a primary consideration for high quality data, is also detailed.

Some aspects considered during design and layout consisted of operator usage, means of conducting future maintenance, ease of construction, and the quality and quantity of data to be obtained.

These air monitoring vans have been in field usage by Transportation Districts for two years, resulting from this usage a design review is included in the section titled Design in Retrospect.

ClibPDF - www.fastio.com

VEHICLE DESCRIPTION

Basic Vehicle

The type of vehicle selected as the basis for the air monitoring laboratory is a Chevrolet Van. This unit is a model GS/GE 30 with a 125-inch wheel base and 6000 lb gross vehicle weight. It has a 350 cubic inch engine, automatic transmission, and disc brakes (power assisted). The main design feature is an engine-forward layout providing 10 feet of clear floor space behind the seats. One other feature that is convenient for operation is the sliding door which permits opening with limited side clearance, Figure 1.

Figure 1 Air Monitoring Van

All three major automobile manufacturers have a similar unit and the Chevrolet was chosen due to its immediate availability through equipment supply channels.

Vehicle Modifications

The changes and additions discussed below are the most obvious modifications that directly relate to the basic vehicle. Other changes are discussed under the heading for the appropriate piece of equipment.

Fiberglass Top

The top for this van was purchased separate from the unit and then installed, although the vehicle can be purchased complete with top if desired. The top was furnished and installed by a

ClibPDF - www.fastio.com

local fiberglass shop. The only accessories to the top are the side windows used for ventilation. After installation, the top was sprayed on the inside with 1-1/2" of polyurethane foam for insulation purposes. The foam layer also provides additional rigidity. The foam requires a latex paint coating to prevent oxidation and dusting of the surface. The paint color used was off-white to provide a light interior. The exterior was left white to help reject the heat load from solar radiation.

Spare Tire Rack

To provide extra inside room, the spare tire for the vehicle was removed from the interior and located on an exterior bracket. This bracket mounts to the hinges of the right rear door and moves with the door. This was custom made for this unit but is commercially available.

Trailer Hitch

A trailer hitch fabricated for the unit was designed for a 3000 lb trailer with 300 lb tongue weight. An electrical connection was provided for the trailer lights.

Windows

Two louvered window assemblies were installed in the van body. One was centered on the driver's side, high enough to clear a standard counter height of 30 inches, and the other was located in the side access door to provide cross ventilation. It is recommended that windows be ordered as standard equipment if desired.

Paint

The van was painted light blue, a "civilian" color as opposed to the standard Omaha Orange California Department of Transportation Equipment. This was done for security reasons as the unit will have to work in areas where vandalism of state owned property has been observed. The light color also rejects solar radiation.

Air Conditioning

The vehicle, as modified, does not lend itself readily to air conditioner mounting. The fiberglass top does not have enough support strength and, therefore, mounting must be made on the original metal ridge of the top (see Figure 2).

ClibPDF - www.fastio.com

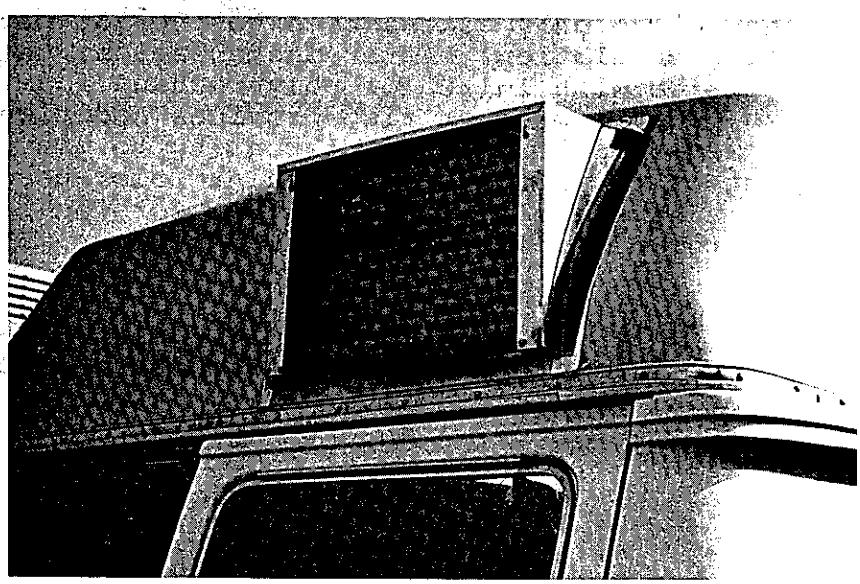

Figure 2 Air Conditioner Mounting

The unit selected for this van has 6000 BTU capacity with a 2-speed fan. It does not utilize a cycling compressor as the on-off cycle affects the power available to run the analyzers and will therefore affect their output. The unit should run continuously when needed.

The air conditioner was located over the right rear door, on a bracket diagonal to the interior corner. In this manner the enclosure does not project past the spare tire and power wiring is easily routed from the switch panel to the unit.

If a top with a stepped profile is available it is recommended that this be used to facilitate mounting a roof type air conditioner. Some internal brackets would probably be required to support the weight. It would cut down on interior clearance but, if components are arranged to fit, it would provide a better alternative.

Floor Covering

Before mounting any of the interior components the van floor was covered with a layer of 3/4" exterior plywood. This increased rigidity and provided a uniform surface to work on.

A commercial grade of indoor-outdoor carpeting was glued to the plywood and the components were bolted onto the floor assembly. This carpet does help to reduce some noise as well as provide some insulation to the vibration produced by the generator. Since the analytical equipment does not use wet reagents, the use of carpeting does not impose a special cleaning problem.

ClibPDF - www.fastio.com

Wall Covering

The interior walls of the van are 1/8" thick wood grain vinyl coated paneling. This was attached to the wall structural members after the insulation was applied and provides mechanical protection to the insulation. Wall insulation is 1-1/2" thick polyurethane foam which was sprayed on when the top interior was done. Sheet stock insulation could be used on the walls if desired.

Power Generator

Since the van is intended to operate in remote locations, an on-board power supply is necessary. For the van without air conditioning, the power requirement is satisfied with a 3 kw generator. With air conditioning, a 4 kw generator is required (see Figure 3). Several companies manufacture generators with these capacities and they are interchangeable as to physical size with about a 20 lb weight differential. The generator used was a Kohler Model 4CM21.

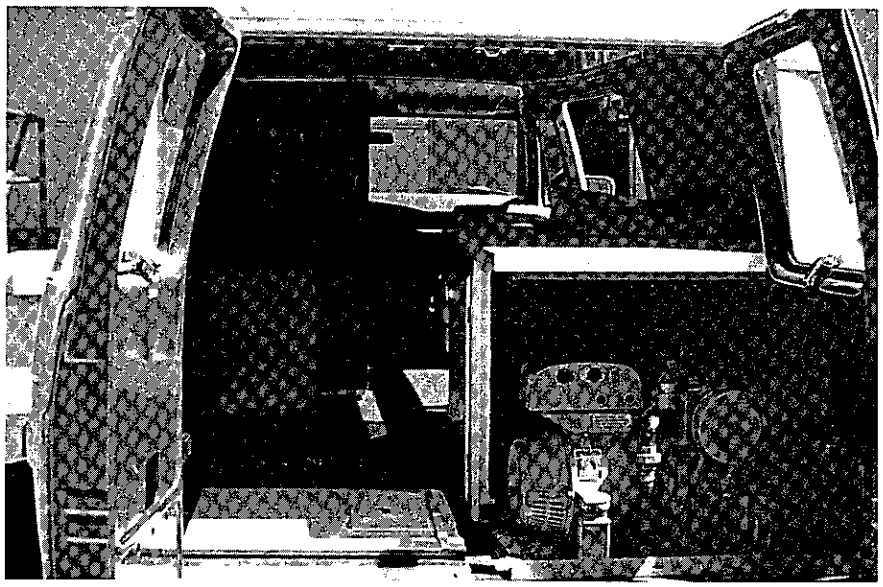

Figure 3 Generator -- Housing Removed

The design of the generator, the method of mounting, and its cooling system are very critical. A motor home type generator is the only acceptable unit. It is designed for mounting in an enclosed compartment and also mounted to isolate vibration from the reciprocating engine. Engine speed is also critical when considering vibration. The low speed (1800 rpm) models are highly preferable when compared to those with high speed (3600 rpm). This places the vibration frequency in a band which is easier to isolate from the vehicle and components within the vehicle. Vibration, due to the generator, transmitted to the van has been found to be very low.

ClibPDF - www.fastio.com

The enclosed operation of the air-cooled generator requires a fresh air supply from the exterior of the van and a positive exhaust of heated air. This is the usual basic design of the motor home type. The engine-driven fan draws air through louvered openings (approximately 170 square inches) in the van exterior and passes it through ducts, over the fins on the engine block, then down and out the floor of the compartment and to the van exterior. Heat rejection to the van interior has been minimal.

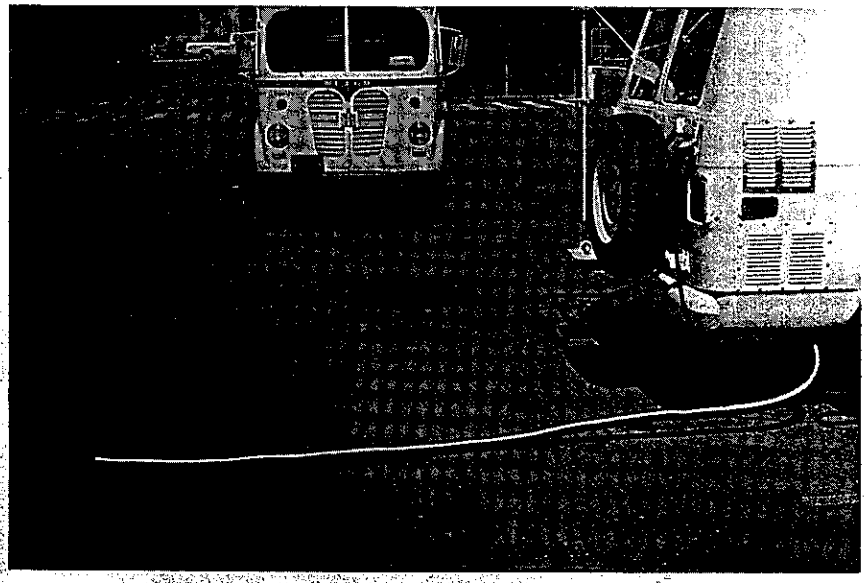

Figure 4 Exhaust Tubing

The exhaust from the gasoline engine is expelled through the floor of the vehicle to a muffler and then expelled at the side of the vehicle. This exhaust is then routed away from the van by means of flexible tubing (see Figure 4). The tubing can be of several kinds but shop type exhaust tubing is recommended for the first 6 feet. Flexible plastic ducting can then be added as needed. Approximately 30-50 feet downwind has proven to be sufficient except for calm conditions as the exhaust will tend to build up and affect the pollutant readings. Alert operators can note the background changes and document their occurence so that the data remains accurate.

Generator Enclosure

Housing for the generator was designed to accomplish several objectives. Namely, to shield from noise and heat and to provide storage and working space.

ClibPDF - www.fastio.com

The housing is constructed from 5/8" thick plywood and is mounted directly to the right rear wall of the van. This positions the generator behind the vehicle wheel well and encloses it with plywood on three sides and with the van exterior wall on the fourth side. The housing can be opened from the rear of the van so that generator removal is possible. All interior openings are sealed and the interior of the enclosure is lined with 1/8" thick lead sheet. This lowers the noise emitted to the van interior to an acceptable level.

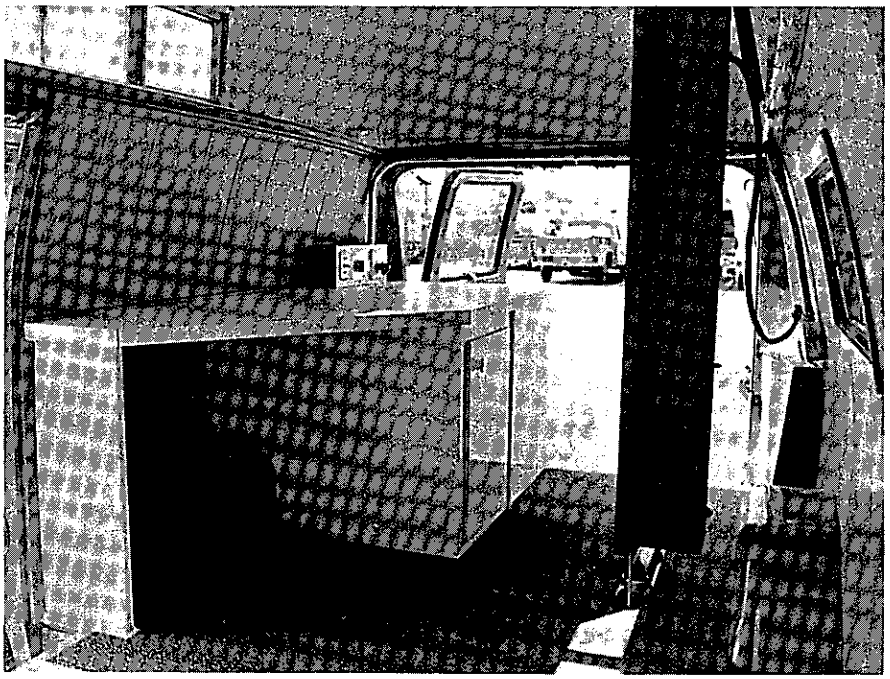

Figure 5 Counter Top -- Generator Housing

The top of the enclosure extends forward to the side door opening providing a large flat formica covered working surface (see Figure 5). This area is usable as a "desk type" writing area with leg room under the surface. Forward of the generator housing is an enclosed storage cabinet accessible through a side door (see floor plan).

A power switching box to enable selection of on-board or outside power is mounted on the rear top of the enclosure immediately above the generator (see Figure 6). A later section of this report explains the power wiring system and related components.

ClibPDF - www.fastio.com

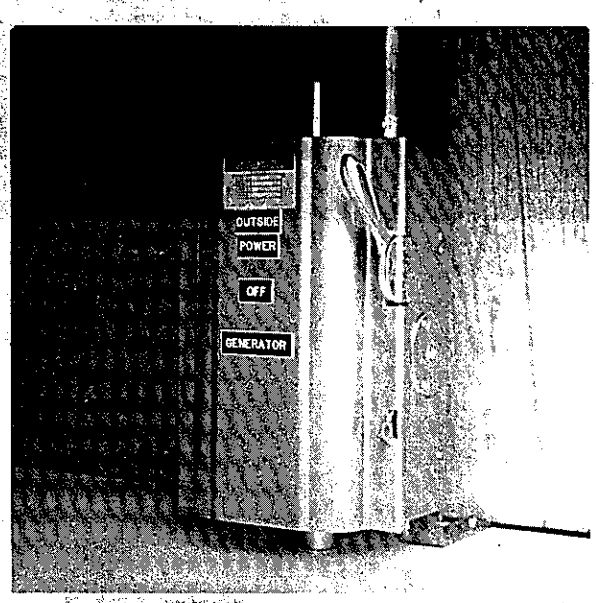

Figure 6 Power Switch & Generator Start Switch

Cabinets and Instrument Racks

A standard 2-door metal laboratory cabinet base is used for mounting several of the support components for the system (see Figure 7). Included in this group are the following items: Main vacuum pump, system manifold, analyzer supply pumps, electrical receptacles for pumps, NDIR power supply, and the power distribution box for the electrical system.

The cabinet base has had the following modifications:

1) Cutout made for wheel well.

2) Switch box mounted to top left rear corner.

3) New wooden top made to fit, covered with formica.

4) Base drilled for two bolt mounting to floor of van - diagonally opposite corners.

5) Door and drawer latch mounted to restrain them from opening during van movement.

6) Counter top was drilled for mounting flow panel.

7) Floor of cabinet was reinforced with 5/8" plywood so that the pumps would not cause resonance in the floor panel.

ClibPDF - www.fastio.com

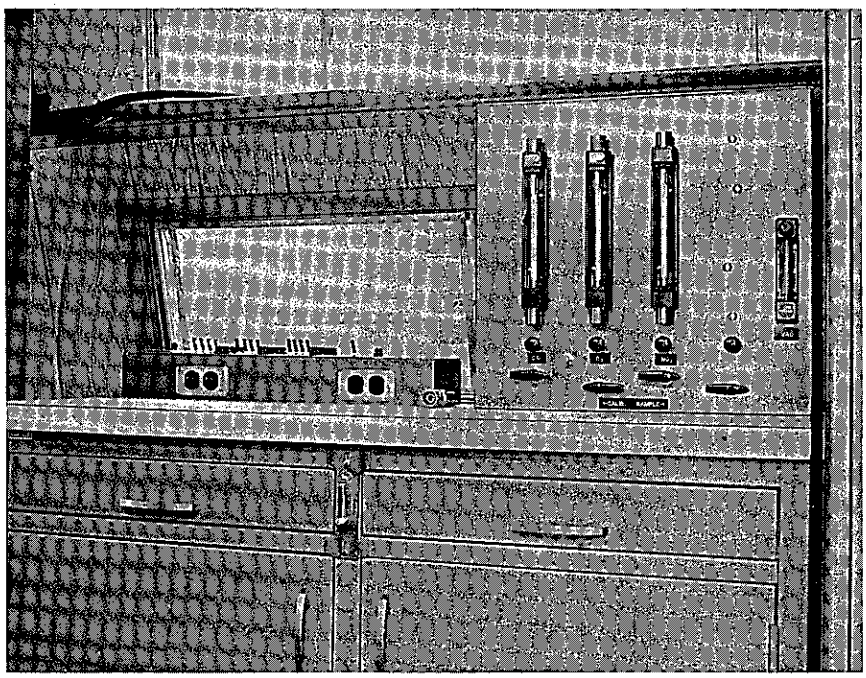

Figure 7 Power Switches & Flow Control Panel

The cabinet is mounted such that the top rear edge just clears the van wall interior. Due to the curvature of the van walls this provides approximately two inches clearance, for electrical and sample lines, near the floor.

The instrument rack used is a standard unit with dimensions of 59" H x 25" D x 24" W (see Figure 8). It is made for instruments having a standard 19" panel face.

ClibPDF - www.fastio.com

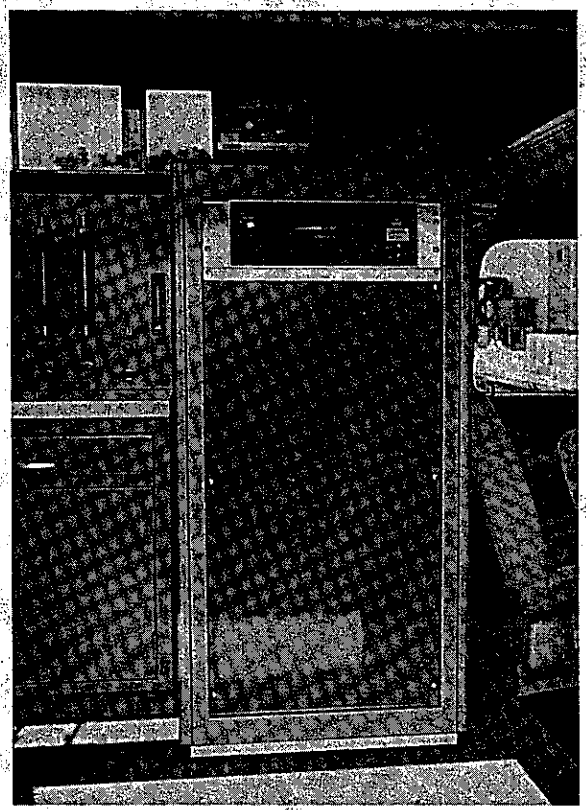

Figure 8 Instrument Rack

The modifications made are the following:

1) Modify the base to allow attachment of shock mounts (Barry Cup Mount No. C2090-T6). This required trimming the cabinet base.

2) Install angle brackets to support instruments.

3) Drill top of cabinet for mounting NDIR Head and recorder terminals for same (see Figure 9).

4) Drill and mount top shock isolator centered at top rear. Drill top curve of original van roof for bracket to tie to the isolator.

ClibPDF - www.fastio.com

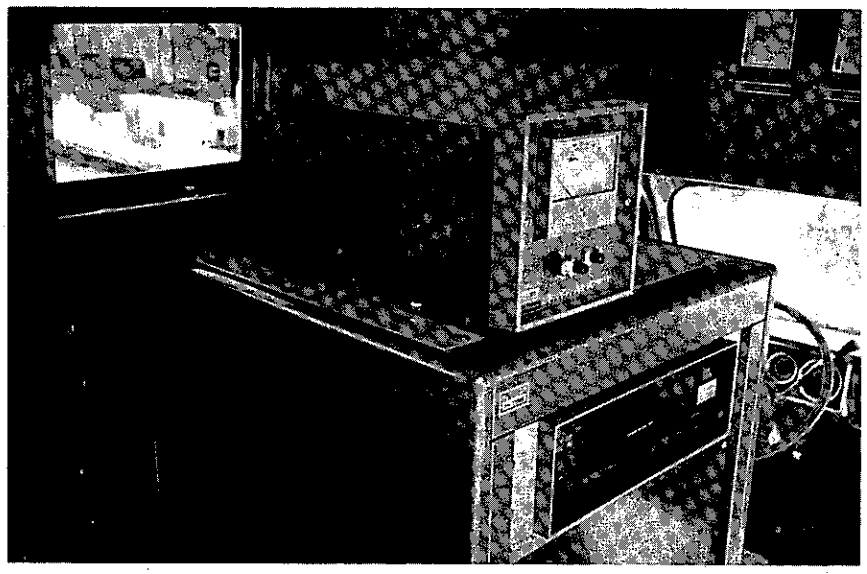

Figure 9 N.D.I.R. Electronics (Top of Rack)

The floor mounted shock isolators are first mounted on brackets which in turn are bolted to the van floor (see Figure 10). With the rack mounted in the van, with the top rear clearance of two inches allowed for free movement, van wall curvature provides about 4" - 6" of clear space behind the unit for access to analyzer wiring and plumbing.

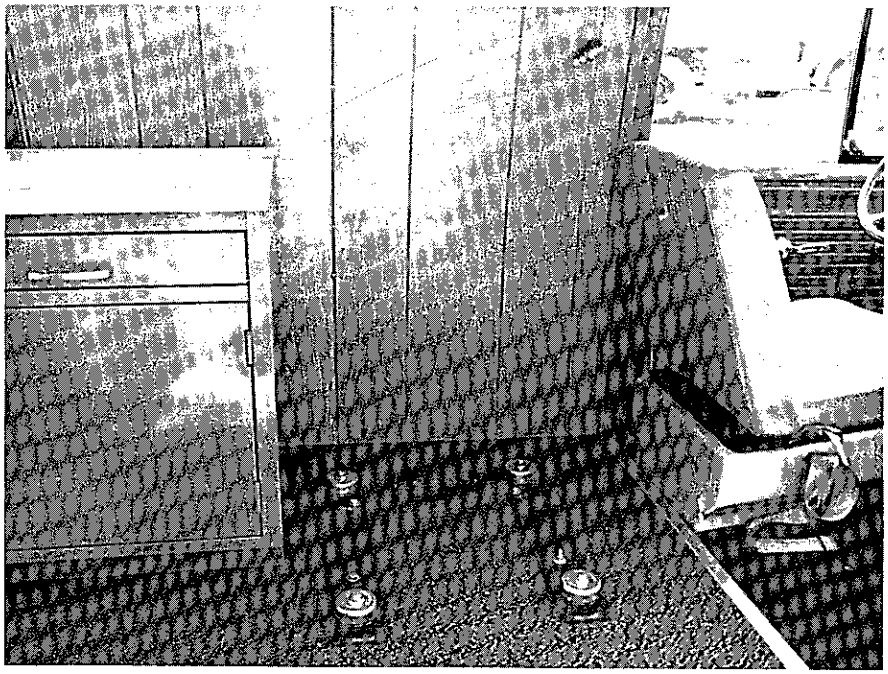

Figure 10 Shock Mounts for Rack and Vents for Instruments Exhaust

ClibPDF - www.fastio.com

Power Wiring

The electrical system in the van is designed to operate on one of two sources: One source is the on-board generator and the other is standard 110V 60 Hz A.C. power brought into the van by an extension cord. Any 110 volt 20 ampere supply will support van operation without the air conditioner; 30 amperes are required for total operation.

An electrical power cord (SJ 3-12) is supplied with a carrying and storage box (see Figure 11) to be used to provide electricity to operate the air monitoring equipment when outside power is available. There is a twist lock receptacle on the rear corner of the van which allows distribution of electricity through the van's fused power system.

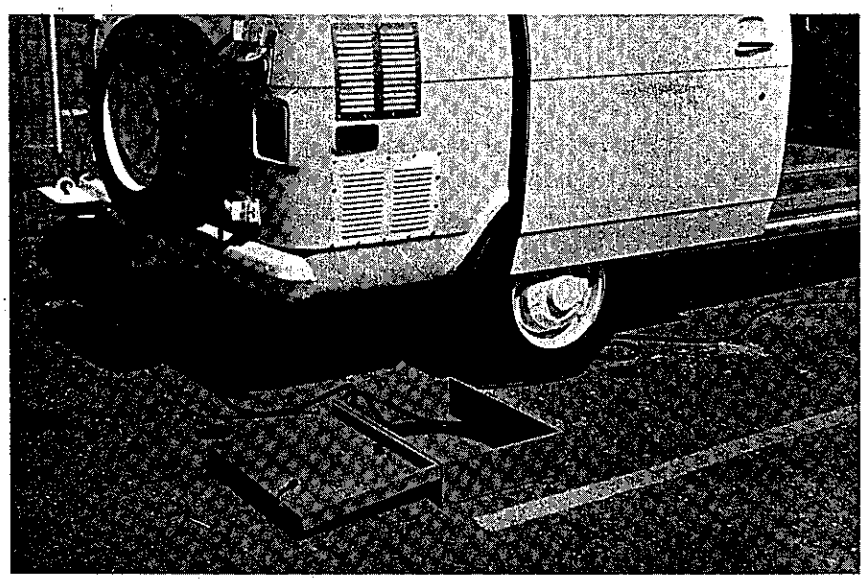

Figure 11 Power Supply Cable & Storage Box

Figure No. 12 illustrates the power system layout. Multiple fusing and switching safeguard all electrical components and provide versatility for partial operation of the total system when desired. As an example, one master switch for the recorder panel controls all recorders while individual switches are supplied so that recorders can be isolated when their analyzers are not being used.

External power outlets for the Hi-Vol sampler and the Meteorological sensors, the pumps, and the analyzers are also controlled by internal switching on the counter mounted power panel.

A master fuse to protect the generator <u>or</u> outside line power source is placed in the junction box on the left rear wall.

ClibPDF - www.fastio.com

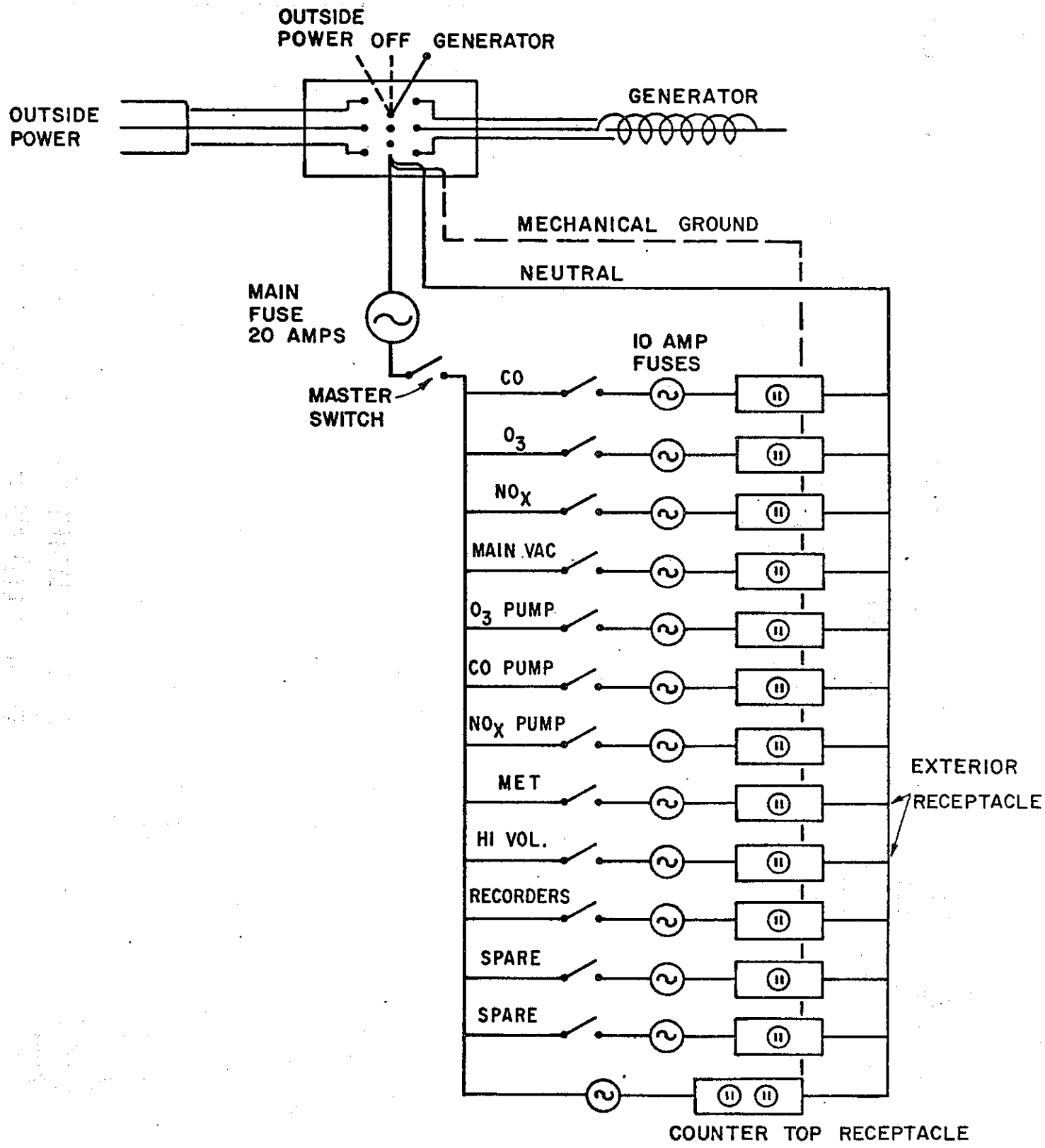

FIGURE 12 MINI-VAN WIRING DIAGRAM

ClibPDF - www.fastio.com

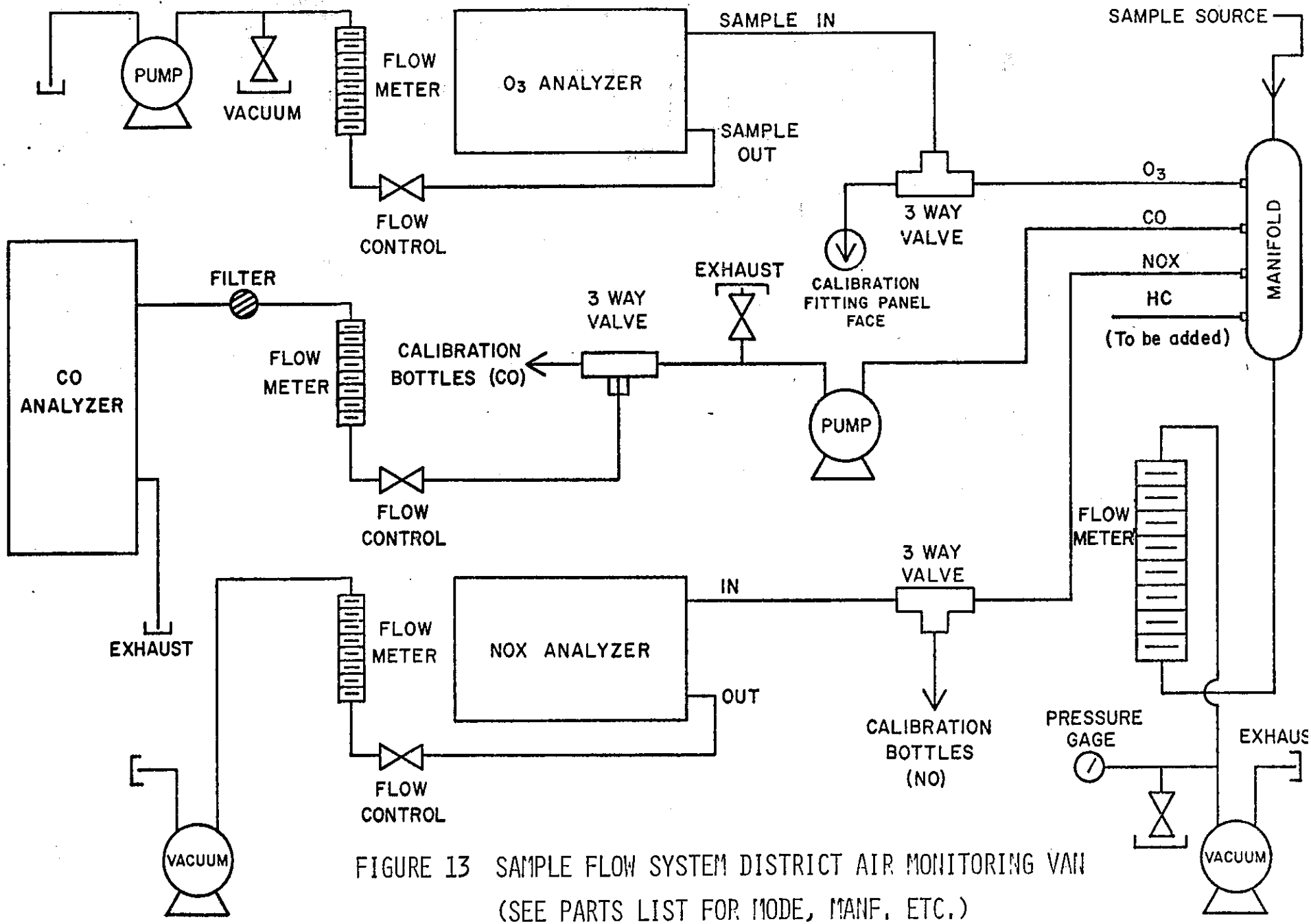

FIGURE 13 SAMPLE FLOW SYSTEM DISTRICT AIR MONITORING VAN
(SEE PARTS LIST FOR MODE, MANF. ETC.)

ClibPDF - www.fastio.com

SAMPLE FLOW SYSTEM

The sample flow, as shown in Figure 13 is controlled in one main flow system and three sub-systems with a possibility of adding one additional sub-system. The specialized parts in the following discussion refer both to Figure 13 and the parts listed in Appendix I.

The main vacuum pump pulls a continuous flow of sample into a sample manifold then through a flow meter and on through the pump where it is exhausted. This provides a real-time sample to the sub-systems at all times. The flow rate on this main branch is approximately 12 liters/minute at a vacuum equal to 1 inch of mercury.

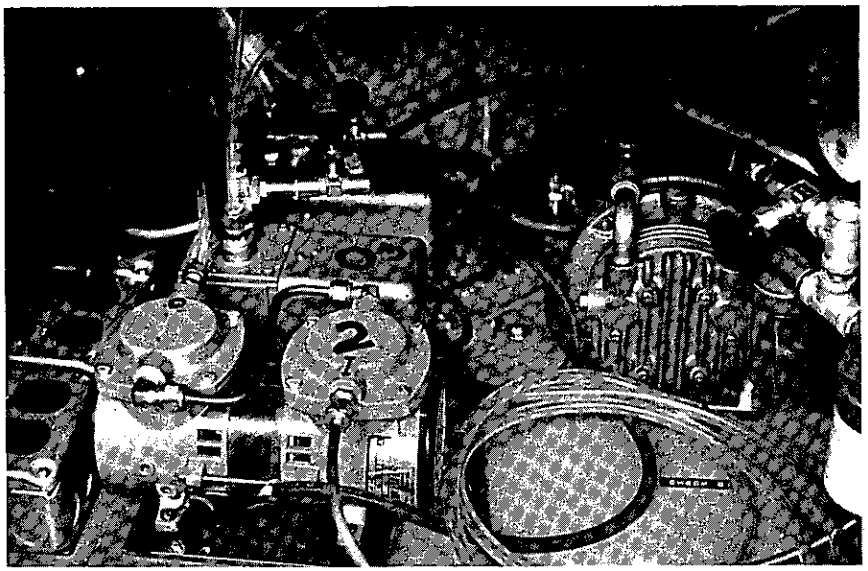

Figure 14 Analyzer & Main Vacuum Pumps

The Carbon Monoxide (CO) analyzer is fed by a 1 liter/minute flow from a metal bellows type pump with the excess flow by-passed. The pump and flow control are upstream from the analyzer as the analyzer is pressure sensitive and CO in the sample flow is not affected by the system materials. The analyzer is allowed to exhaust to atmospheric pressure at all times.

The Ozone (O_3) and Oxides of Nitrogen (NO_x) analyses are affected by exposure to system materials; therefore, the pump and flow control are downstream from the analyzer to avoid sample degradation. The flow to the Ozone analyzer is 2.8 liters/minute. The Ozone system pump is a metal bellows type located downstream from the analyzer to prevent sample degradation. The Oxides of Nitrogen analyzer takes 150 milliliters/minute flow and is handled by a pump provided by the analyzer manufacturer.

ClibPDF - www.fastio.com

The calibration input valving is located upstream from the analyzers in all cases.

The flow system is constructed of relatively inert stainless steel fittings and teflon (FEP) tubing upstream from the analyzers and uses a minimum of stainless steel in the Ozone and Oxides of Nitrogen sub-systems.

The ambient air sampling probe is constructed of teflon tubing and stainless steel fittings and is physically supported by electrical conduit (EMT). There is a porous stainless steel filter (Hoke #F2B) on the sample probe inlet to prevent particle contamination of the analyzers and the flow system.

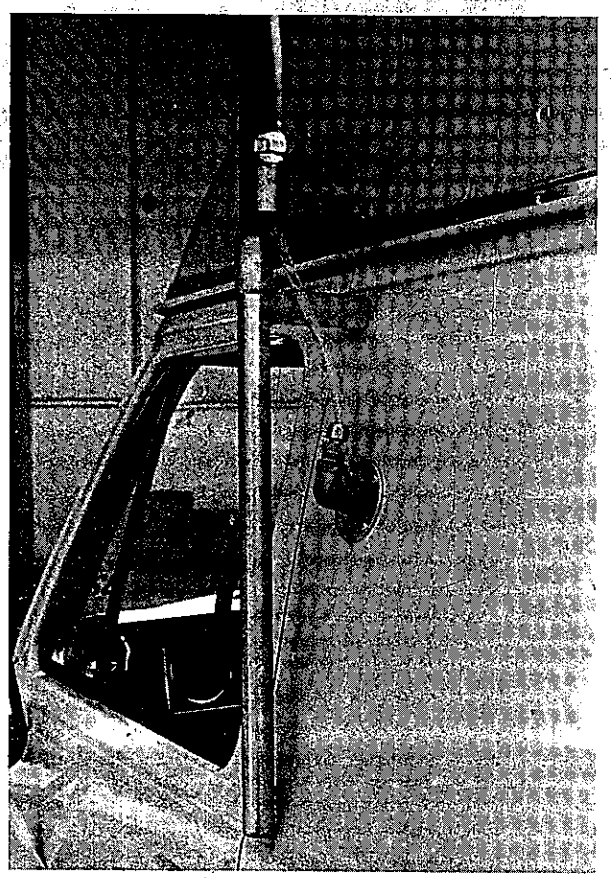

Figure 15 Sample Probe Mount & Wall Fitting

Figure 16 Sample Probe

ClibPDF - www.fastio.com

The sample probe is mounted in a bracket bolted to the van exterior just behind the driver's door (Figures 15 and 16). The sample line is connected to a stainless steel bulkhead fitting at the van wall and is connected with 3/8" O.D. teflon tubing to the main manifold. This main manifold is stainless steel and is formed to give good flow scavenging characteristics throughout. This prevents sample holdup and contamination of the sample.

The flow control panel holds all flow meters and control valving for all flow systems and is mounted on the top of the 2-door cabinet. The sub-system flow meters for Ozone and Oxides of Nitrogen are brass and they are downstream from the analyzer; the flow meter for Carbon Monoxide is stainless steel and it is upstream of the analyzer. These sub-system flow meters are Fischer Porter No. 10A-3565A. The flow meter for the main flow is a Fischer Porter No. 10A3135N. The accuracy of this meter is not critical as long as excess steady flow is maintained. As it is downstream from the manifold its material will not affect the analysis. Therefore, a low cost meter can be used.

The main vacuum pump, Gast No. 0211-11-V36A-G8C is capable of 28 liters per minute and is valved to flow 12 liters per minute by use of a manually adjusted relief on the intake of the pump. This allows an over-capability to compensate for wear and deterioration of the pump.

The analyzer pumps are Metal Bellows No. MB-21 which have a maximum rating of 6 liters per minute. In this use the system has a manually adjusted relief valve to regulate the required flow to the individual analyzer.

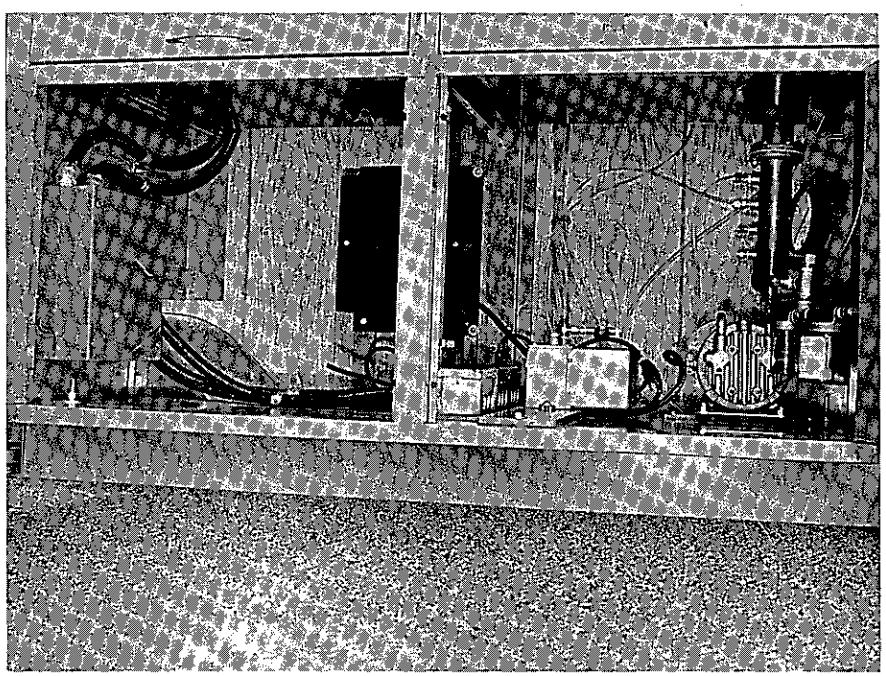

Figure 17 Under Counter Mounted Components

ClibPDF - www.fastio.com

ANALYZERS

The Transportation Laboratory has worked with The Environmental Protection Agency (EPA) at Research Triangle Park[2], Los Angeles County Air Pollution Control District, Bay Area Pollution Control District, the California Air Resources Board (ARB), and many different equipment manufacturers to determine the best instruments for our particular needs.

From the information gained it was decided that second generation instrumentation was desirable from the standpoint of maintenance, repair, specificity and problems of obsolesence. Therefore, the instruments used and described herein combine the latest in specific measurement principles with solid state modular electronics, have low power consumption, and adapt easily to mobile van usage.

The methods of analysis are those prescribed by the Environmental Protection Agency for the measurement of ambient air quality. An exception is the ultra-violet light absorption method for ozone analysis. This method has been proven equivalent to the prescribed chemilumenescence method by tests conducted by the Air and Industrial Hygiene Laboratory as specified by the Environmental Protection Agency. The California ARB is now using this method for ozone analysis in many stations.

Carbon Monoxide Analyzer

Figure 18 is a schematic layout of one commercial form of a Non-Dispersive Infrared (NDIR) analyzer[3]. It consists of an infrared light source, a chopper disk, sample and reference cells, the detector cell and the electronic readout.

It operates on the principle of the absorption of a specific wave length of infrared radiation by a component of interest (in this case, carbon monoxide). The percent of this radiation absorbed by an air sample is proportional to the concentration of carbon monoxide (CO) in the sample. If a reference cell contains pure air, the difference in the carbon monoxide concentration between that cell and a cell with an air sample causes a difference in the amount of energy entering a detector since any carbon monoxide in the air sample would absorb radiation. The detector is a closed container consisting of two side-by-side sealed compartments of equal volume, separated by a flexible metal diaphragm. Both compartments are filled

ClibPDF - www.fastio.com

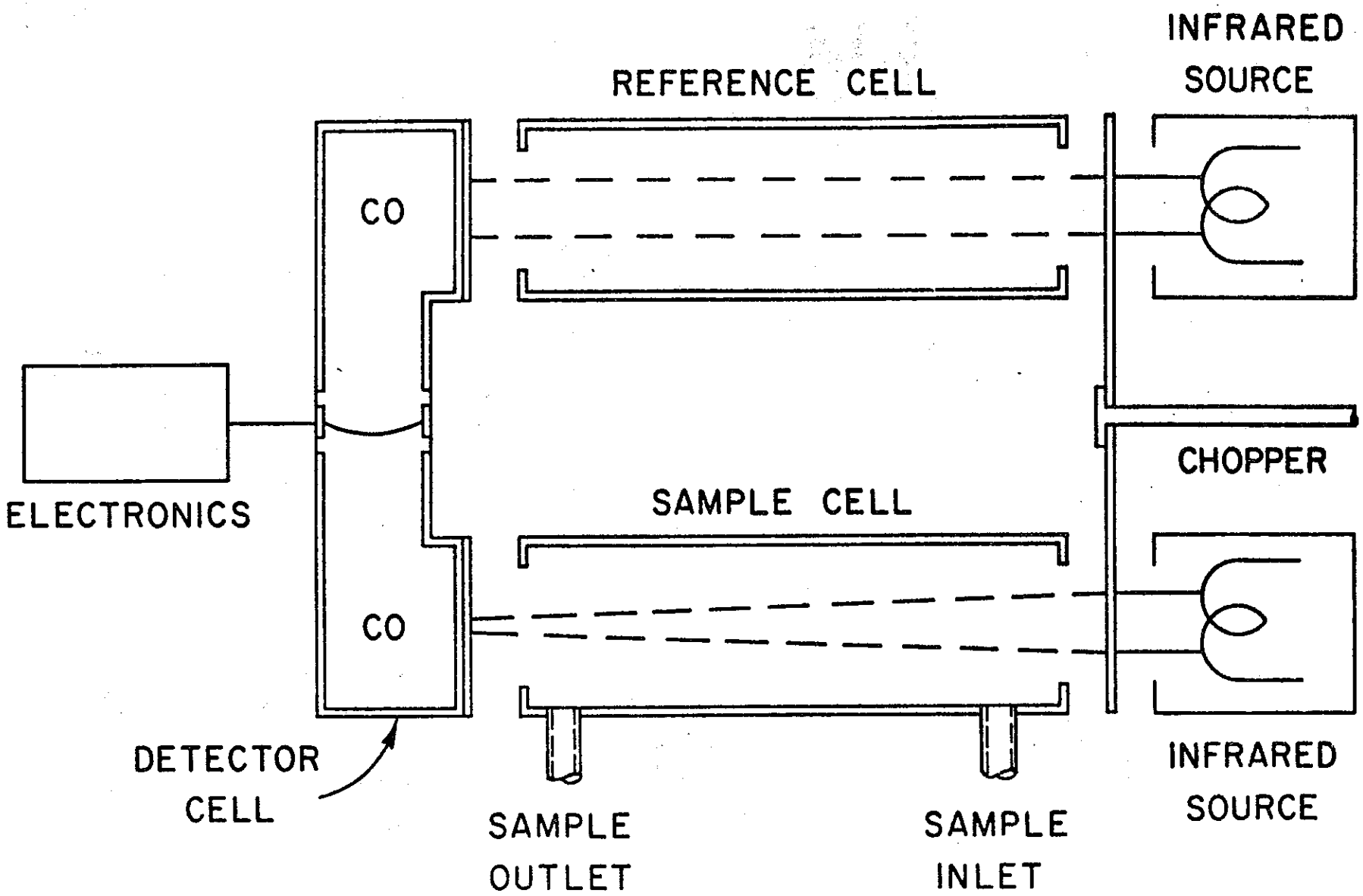

FIGURE 18 NDIR DETECTOR

ClibPDF - www.fastio.com

with an equal concentration of carbon monoxide. The infrared radiation which passes through the reference cell enters one compartment of the detector, while the radiation passing through the sample cell enters the other compartment. The gas in each compartment of the detector is heated by the incoming radiation.

Heating of the gas in the detector causes the pressure in the two compartments to rise. The pressure rise is greater in the compartment receiving the radiation from the reference cell since a portion of the radiation transmitted through the sample cell has been absorbed already by the carbon monoxide present in the sampled air. Due to the unequal pressures, the diaphragm deflects into the sample side of the detector.

Between the infrared sources and the cells is a chopper wheel which interrupts the radiation beam entering the cells at a rate of approximately ten cycles per second. Each time the beam is interrupted a pressure differential is created thereby causing a deflection change in the diaphragm. This back-and-forth movement of the diaphragm as the beam is chopped produces a change in electrical capacitance. This capacitance change modulates a radio frequency signal from an oscillator. The signal is subsequently demodulated and transmitted to an amplifier where it is amplified, indicated on a meter, and recorded as desired.

The long path version (40" sample cell) of the NDIR was used for carbon monoxide analysis in this van, as it will operate with ±1% accuracy of full scale for ranges of 0-100, 0-300 ppm with a sensitivity of 0.5% of full scale (.5 ppm or 1.5 ppm depending on range).

Note: The long path analyzer has now been superseded by a 15" sample cell model (Beckman 865) which has been upgraded electronically and optically. No test results are available on this unit to date.

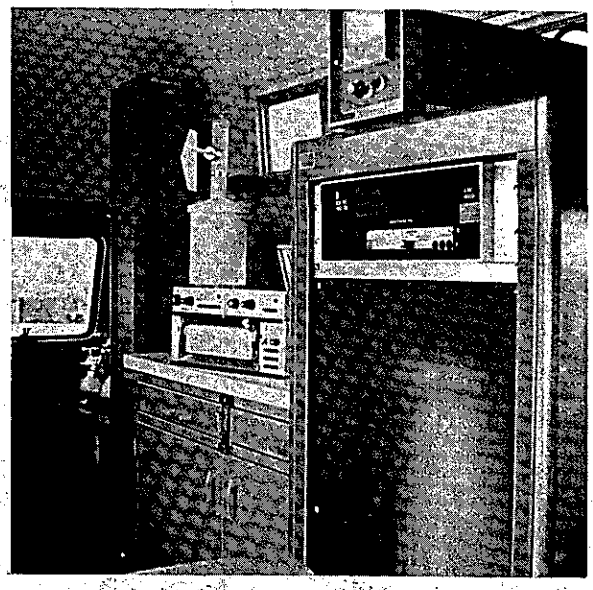

Figure 19 Van Interior View (From Front)

ClibPDF - www.fastio.com

The flexibility of the analyzer in terms of continuous or batch analysis makes it suitable to the needs of our ambient air quality study.

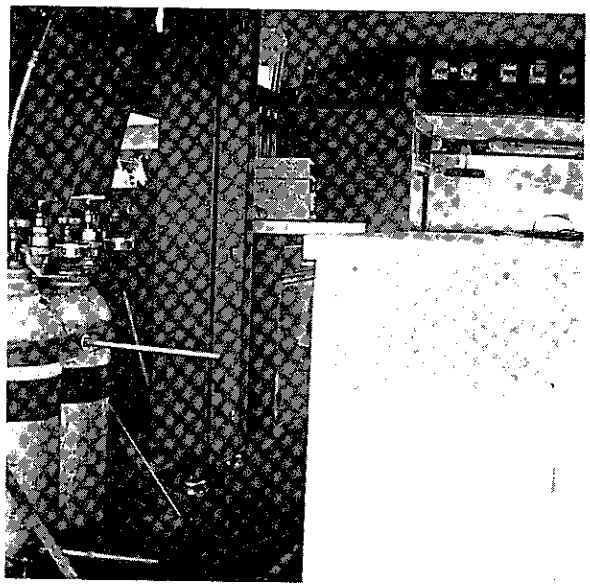

Figure 20 Van Interior View (From Rear)

Figure 21 Top Mount - NDIR

The analyzer is physically separated into two cabinets, as shown in Figures 19, 20 and 21, the sample cell chamber and the electronic head. The sample chamber is mounted vertically on cup type rubber shock mounts to protect it from low frequency vibration due to on-the-road travel and from generator vibration. The electronic head is mounted on the top of the main instrument rack and it, in turn, is insulated from vibration by the same type mounts. An interconnecting cable is used between the two components and is routed along the wall of the van. The sample is exhausted through the floor of the van after leaving the analyzer. This exhaust port is shielded from clogging by mud or debris to prevent back pressure on the instruments.

This analyzer requires no support gases other than calibration gases. See Calibration Section.

Ozone Analyzer

Ozone concentration is measured by detecting the absorption of ultra-violet (uv) light within a sample volume of air. As the coefficient of absorption of ozone is known, the instrument calculates the uv absorption within the air sample using Beer's law[4].

When a beam of monochromatic radiation is transmitted a short distance through an absorbing medium, a certain fraction of the incident radiation is absorbed. Beer's law states that the fraction thus absorbed is directly proportional to the density of the medium and to the distance traversed. The constant of proportionality is the absorption coefficient of the medium[5].

ClibPDF - www.fastio.com

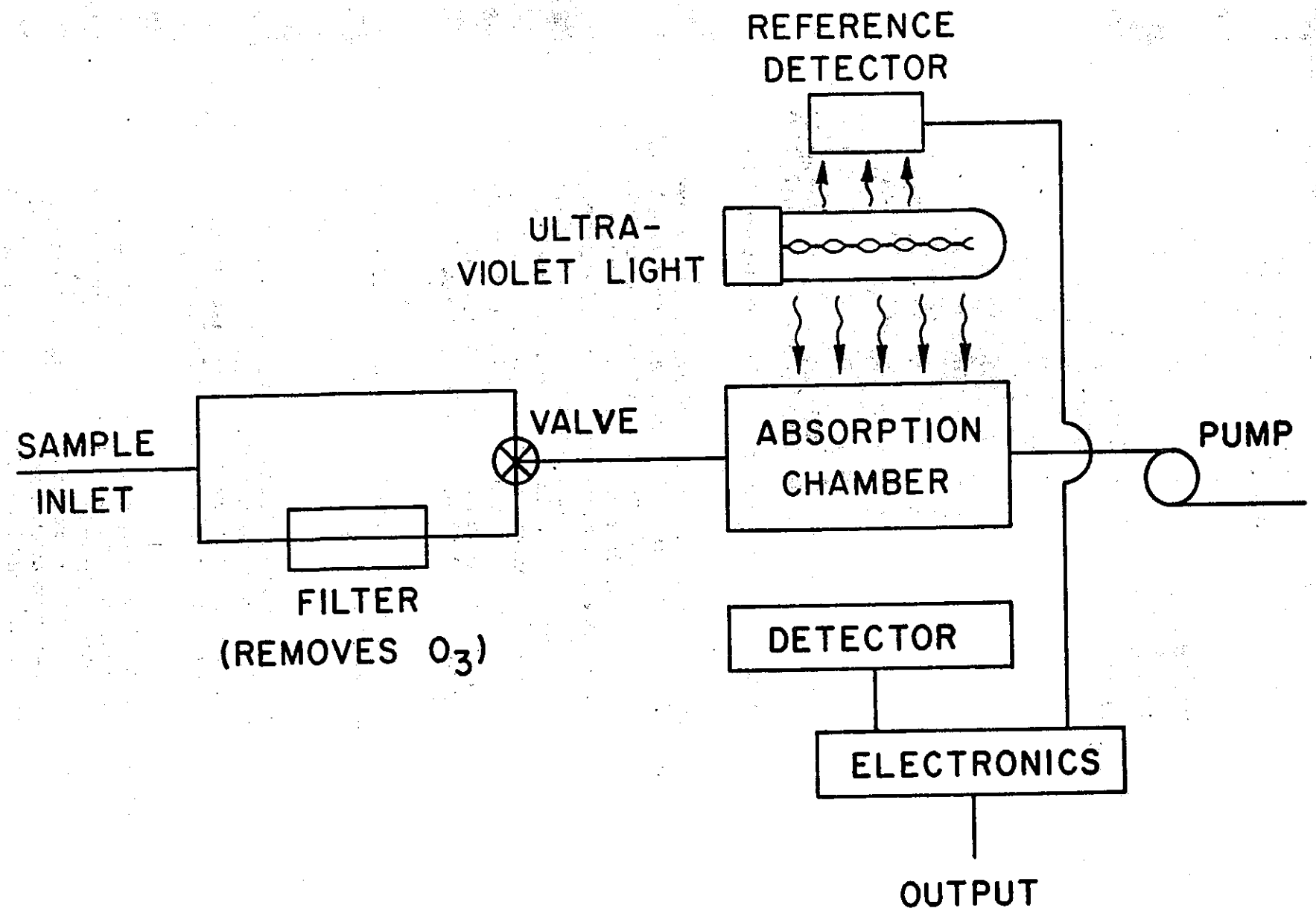

FIGURE 22 O_2 ANALYZER UV ABSORPTION METHOD

ClibPDF - www.fastio.com

As shown in Figure 22, sample air entering the inlet divides into two sample lines. In one line, a filter removes the ozone. Both the unfiltered air and the filtered air enter a valve which alternately connects them to the absorption chamber.

The absorption chamber has two windows at opposite ends through which uv can enter and exit. The ultraviolet source is at one end of the chamber, and the light detector (sample detector) is at the opposite end. A small portion of ultraviolet light from the source is reflected into a second reference detector. The ultraviolet light which impinges upon the sample detector has passed through the air sample in the absorption chamber whereas the reference detector receives light directly. The sample detector and its associated circuitry constitute the sample channel; the reference detector and its associated circuitry constitute the reference channel.

Measurement begins when a signal from the valve indicates that filtered air is flowing through the absorption chamber. At that time, the sample channel starts to measure photons and integrate the result. At the same time, the reference channel starts counting a standard number of photons. When this count is completed, the integration is halted. The same sequence is repeated for the unfiltered air sample. The difference between the integrated results for the filtered air and for the unfiltered air is computed and displayed as the data output. This difference is a measure of the ozone concentration in the air sample. The air is thus sampled and measured in continuously alternating cycles[1], [2], [6], [7], [8]. The analyzer will operate with a $\pm 1\%$ of full scale accuracy on a range of 0.01 to 10.00 ppm and a sensitivity of 0.01 ppm.

This analyzer requires no support gases and is checked for linearity and span with an ozone generator. See calibration section.

This analyzer is mounted in the main instrument rack on guide rails tied securely to the rack. The rack, as previously mentioned, is shock mounted to the floor and to the wall. The sample is exhausted through the floor after leaving the analyzer.

ClibPDF - www.fastio.com

Nitric Oxide and Nitrogen Dioxide Analyzer

The chemiluminescent method of nitric oxide analysis is based upon the principle that nitric oxide (NO) reacts with ozone (O_3) to give nitrogen dioxide (NO_2), oxygen (O_2), and about 10 percent electronically excited NO_2*. The transition of electronically excited NO_2* to its normal stage NO_2 gives a light emission (hv) between 590-2750 nm, i.e.:

$$NO + O_3 = NO_2 + NO_2^* + O_2$$

$$NO_2^* = NO_2 + hv$$

In the presence of an excess amount of ozone, the intensity of this emission is proportional to the mass flow rate of nitric oxide into the reaction chamber. Ozone for the reaction is

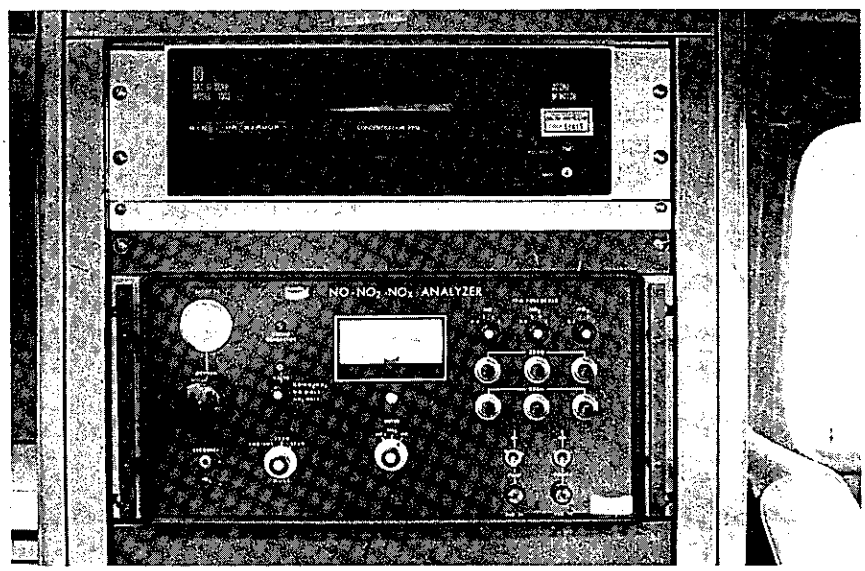

Figure 23 Ozone & NO_x Analyzers

generated by passing bottled air or oxygen over an ultraviolet light source. As ozone and nitric oxide mix, the chemiluminescent reaction produces a light emission which is proportional to NO concentration and is measured by the photomultiplier tube[9,10].

This method also lends itself to total oxides of nitrogen analysis (NO and NO_2) by dissociating the nitrogen dioxide to nitric oxide by passing it over a heated catalyist, then proceeding with

ClibPDF - www.fastio.com

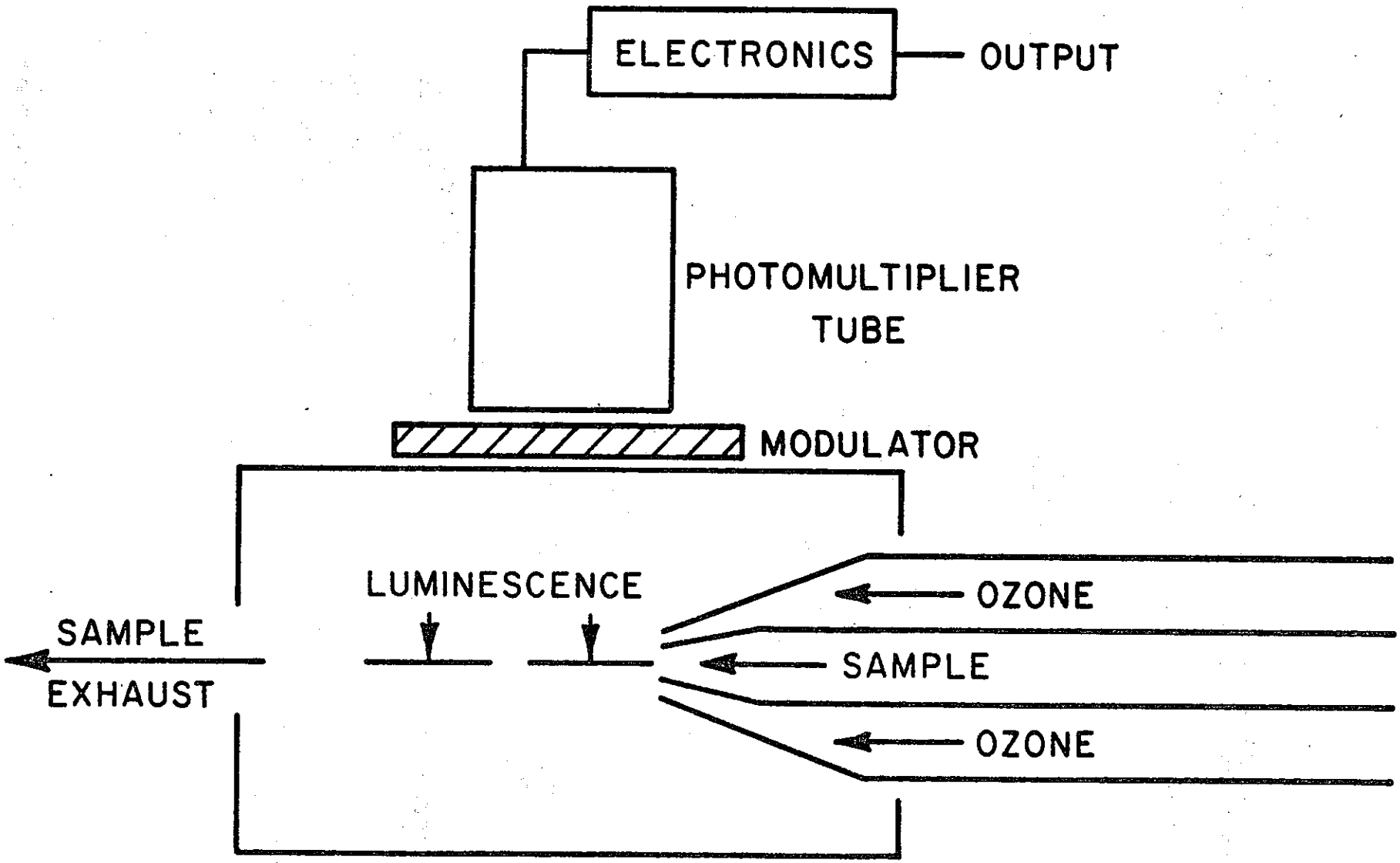

FIGURE 24 NO_x ANALYZER CHEMILUMINESCENCE METHOD

ClibPDF - www.fastio.com

the reaction, i.e.:[3]

$$NO_2 = NO + O$$

$$NO + O_3 = NO_2 + NO_2^* + O2$$

$$NO_2^* = NO_2 + hv$$

See Figure 24.

The analysis has proven to have an accuracy of ±2% of full scale for a range of 0 - 2.0 ppm. This analyzer requires bottled oxygen to operate. It uses an air scrubber** (to remove ambient NO and NO_2) to obtain zero reference air and uses bottled nitric oxide in nitrogen for span. See Calibration Section.

The Bendix version of the chemiluminescent oxides of nitrogen analyzer is the unit used in this van (see Figure 23). Zero air scrubber is shown below. Figure 25.

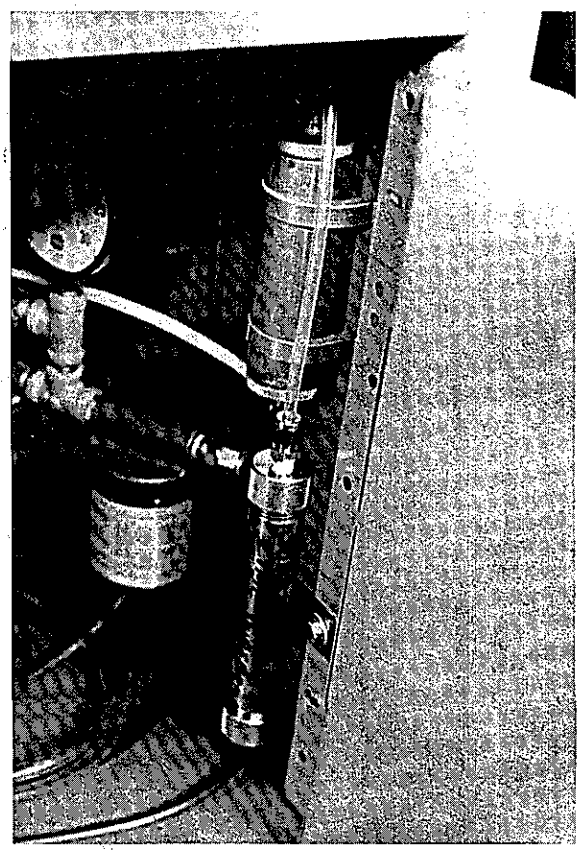

Figure 25 Scrubbers for No_x Analyzer

**This scrubber is a stainless steel cylinder containing chromium trioxide (CRO_3) on firebrick and soda lime with a downstream glass paper filter to trap particulates.

ClibPDF - www.fastio.com

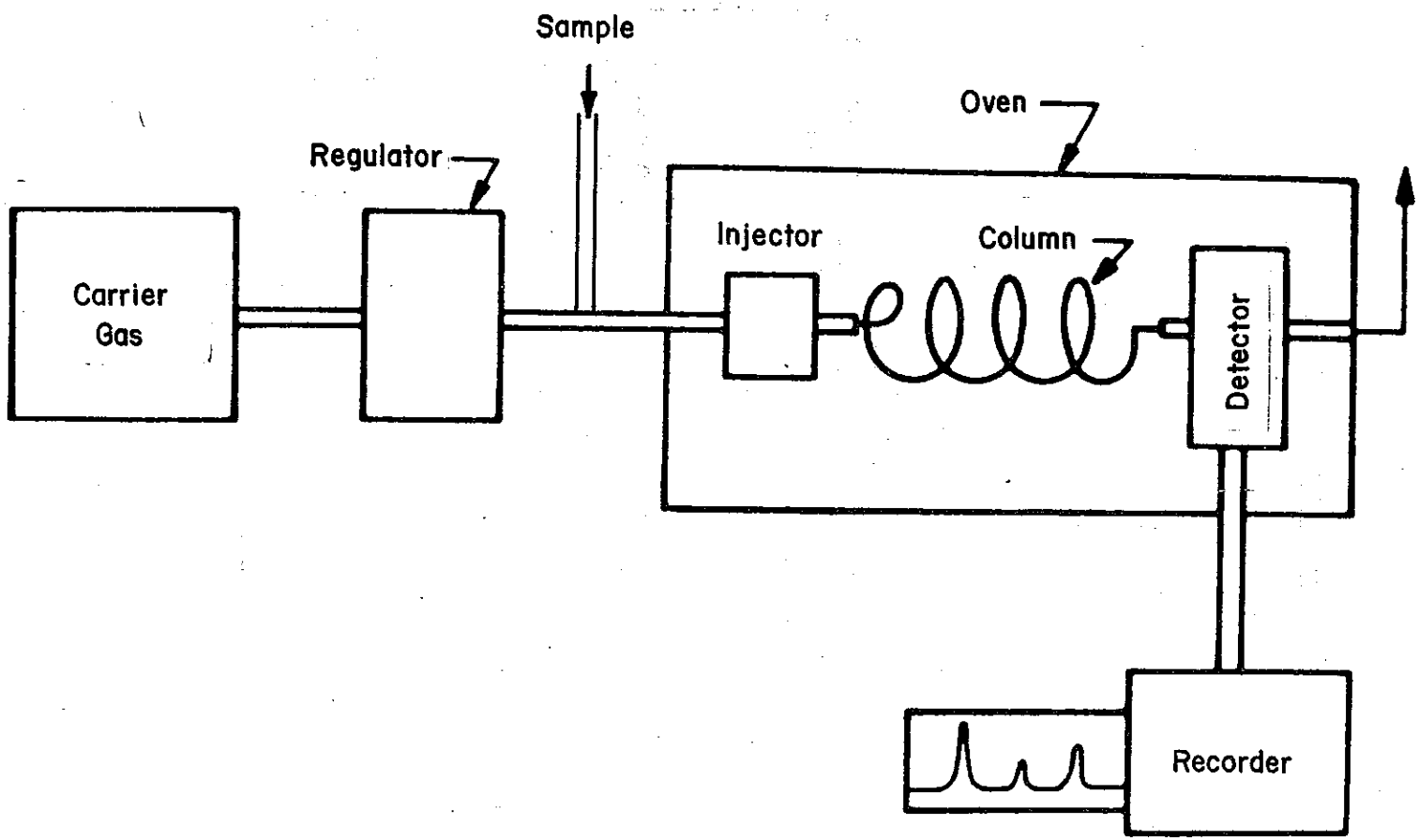

FIGURE 26 MAIN COMPONENTS OF THE GAS CHROMATOGRAPH

ClibPDF - www.fastio.com

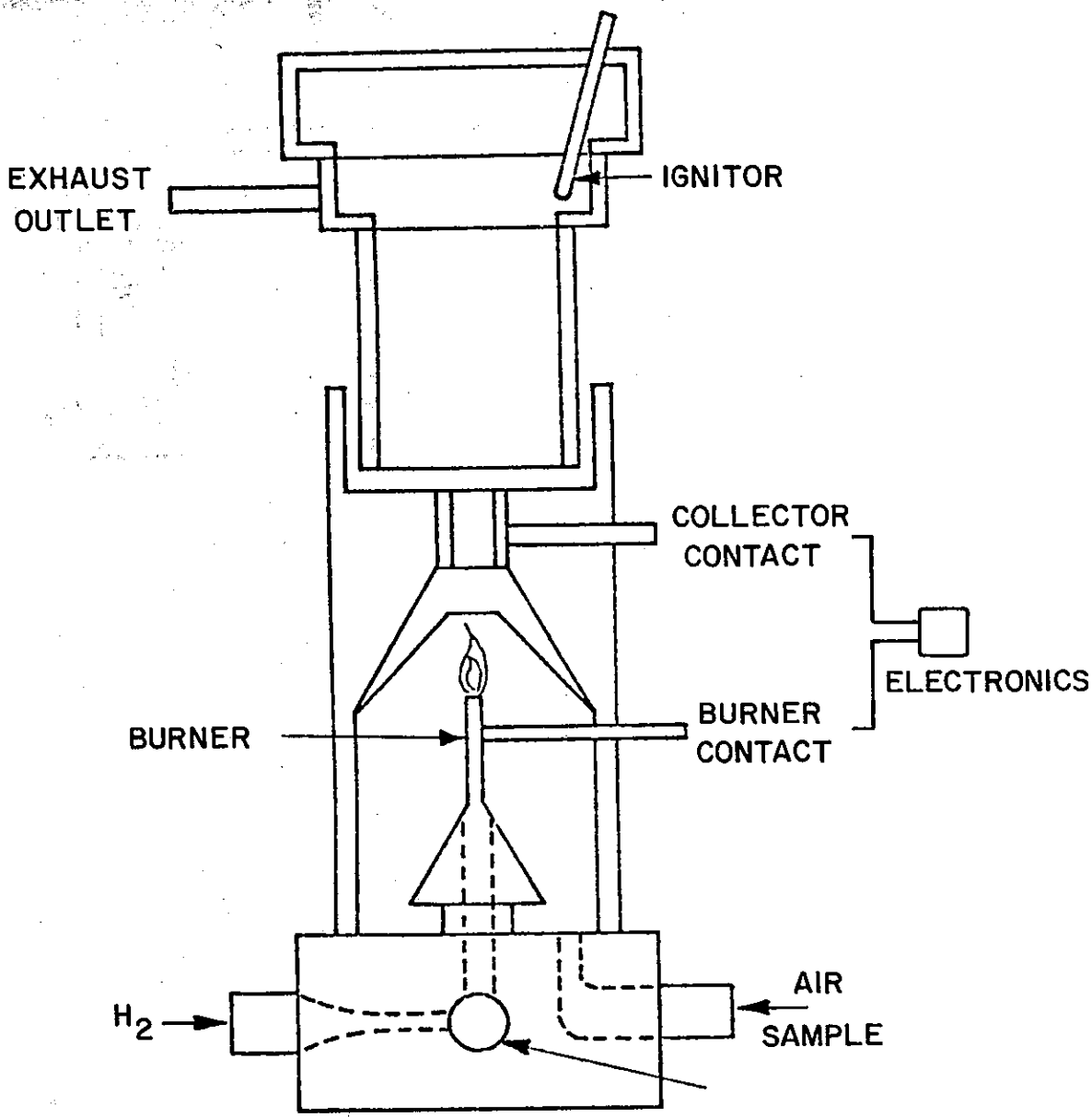

FIGURE 27 FLAME IONIZATION DETECTOR

ClibPDF - www.fastio.com

This analyzer also is mounted in the main instrument rack on guide rails and pulls out for maintenance.

Hydrocarbon Analyzer

In the future, a Gas Chromatograph for total hydrocarbons (THC), corrected for methane (CH_4), will be installed in the van to complete the pollutant monitoring system.

The Ambient Hydrocarbon Analyzer is designed to measure reactive hydrocarbons (THC less CH_4) in ambient air. The analyzer uses a hydrogen flame ionization detector (FID) which is extremely sensitive to hydrocarbons and has been proven to be reliable The measured methane is electronically subtracted from the total hydrocarbon value to give a measure of the reactive hydrocarbons. Automatic standardization of the detector output during each cycle insures a stable baseline for long-term unattended operation. No catalyst, converter, or scrubber is employed in the determination of either methane or total hydrocarbons. Only hydrogen and hydrocarbon free air are required as support gases for this instrument. The hydrogen is supplied by a hydrogen generator which separates distilled water into hydrogen and oxygen by an electrolytic solution process. The hydrogen is then purified by a palladium purifier. Hydrogen is supplied on a demand basis at the required pressure.

All analytical functions and associated readouts are programmed by a solid state electronic timer. Automatic cycling through total hydrocarbons and methane provides the reactive hydrocarbons output which is updated after each cycle (i.e., every 1-1/2 minutes). The three signals are stored in permanent memories with output terminals on the rear panel.

The accuracy for this instrument is $\pm 1\%$ of full scale for ranges 0 - 2, 5, 10, 20, 50 ppm.

A provision has been made for connecting this analyzer into a separate sample flow sub-system from the sample manifold and to the exhaust port at the van exterior. Space is provided in the main instrument rack for mounting this analyzer.

Particulate Sampling

To obtain a representative sample of airborne particles a high volume sampler (Hi-Vol) is used. This consists of an aluminum housing containing a filter holder mounted over a high volume blower (40 to 60 cfm; 2200 m^3 in 24 hrs.). The housing has legs for standing the unit on a level surface (ground or building top) and also contains a timer and pressure sensor to record pressure drop due to filter loading. See Figure 28

ClibPDF - www.fastio.com

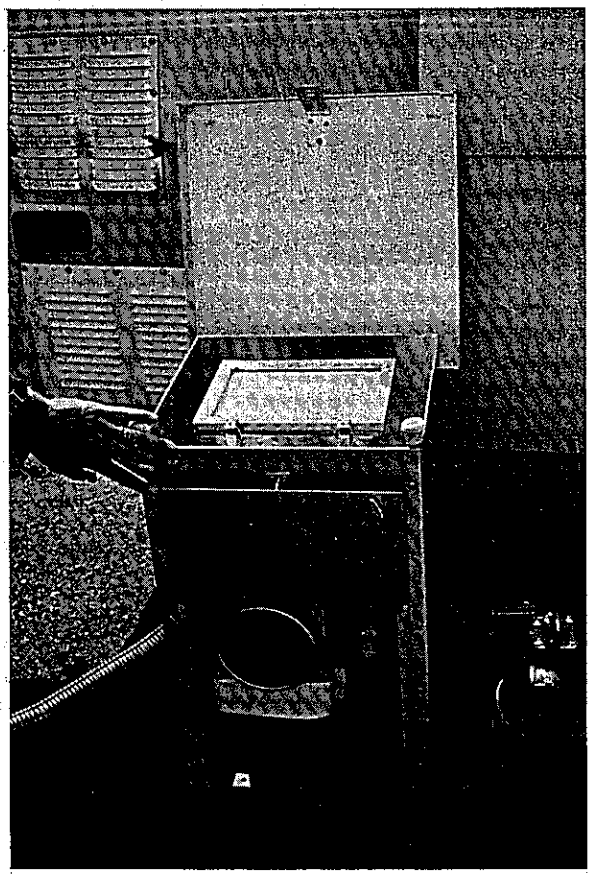

Figure 28 Hi-Vol Sampler

Air is drawn into the covered housing and through the filter paper by the blower fan. This allows particles in the range of 0.1 micron diameter to 100 micron diameter to be collected on the filter. From measurements of the mass collected and the volume of air sampled, the mass concentration of particles in the ambient air may be determined. The lead concentration can be determined from the loaded filter by chemical analysis.

The van is equipped with an outside power receptacle and a 100 ft. extension cord for remote operation of the Hi Vol. See Calif. Test Method No. Calif. 706-A.

ClibPDF - www.fastio.com

METEOROLOGICAL SENSORS

A MRI Model 1074 wind direction and speed sensor is provided with the van (Figure 29). It is mounted on a pole on the left rear corner of the vehicle and extends 4 to 6 feet over the vehicle top. This sensor is a cup anemometer and directional vane system with self-contained solid state electronics for power supply and signal conditioning.

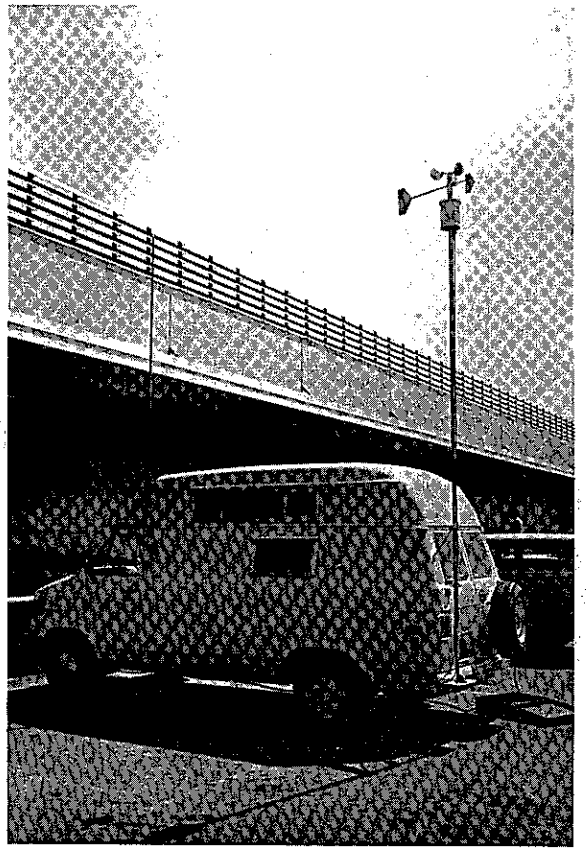

Figure 29
Meteorological
Instruments

The cup anemometer (speed sensor) has a low starting speed and a 0-80 mph range. The cup assembly drives a 50 slot light beam chopper. Rotation of the chopper alternately masks and exposes a photodiode to a minature lamp. The photodiode responds to the light passing the chopper wheel and generates electrical pulses which are then amplified to provide a squarewave output exactly proportional to wind velocity. The vane is a (double potentiometer) 540° system, with internal switching to prevent chart painting at the null point. The vane is designed for low speed response with short wind pass distance (starting threshold 0.75 mph; Delay distance 4 ft. wind pass (50% recovery).

The wind sensor system is designed to be very durable and will withstand the frequent handling it is subjected to in this application. The sensor cup and vane assembly is all aluminum

ClibPDF - www.fastio.com

in contrast to many manufacturers using plastics and compressed foam pellets to form these configurations. They have comparable specifications, yet the metal has better resistance to breakage. The signal wiring and the power supply both plug into a panel on the van exterior near the tower mount.

The supporting pole is aluminum tubing approximately 12 feet long and mounts on a slip fitting which attaches through a bearing mount on the rear bumper. This mount allows one man to "walk the mast up" to the vertical position (see Figure 30). The upper mount is attached near the original roof line of the van and is fabricated with a clamping block to hold the tower (see Figure 31). The sensor mount is keyed so that it cannot rotate with reference to the pole.

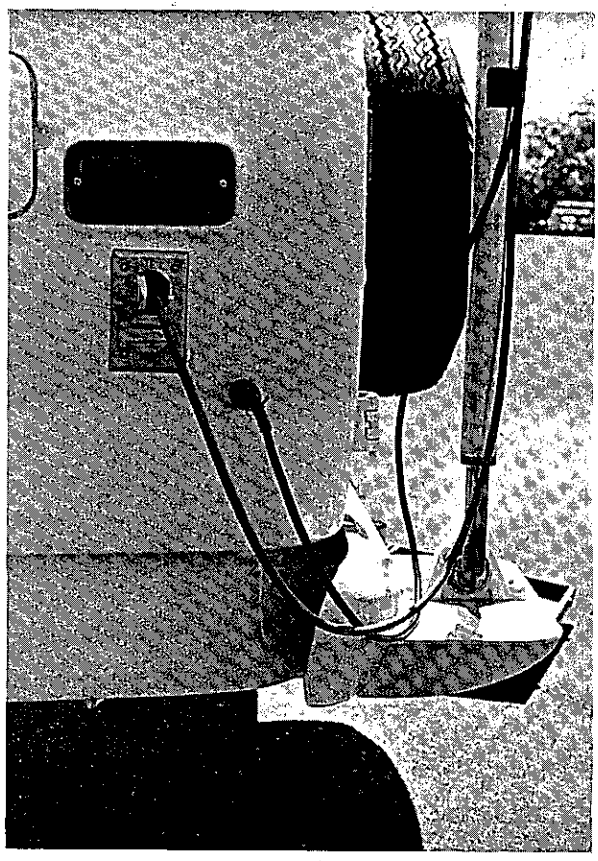

Figure 30 Meteor Sensor Mast Pivot

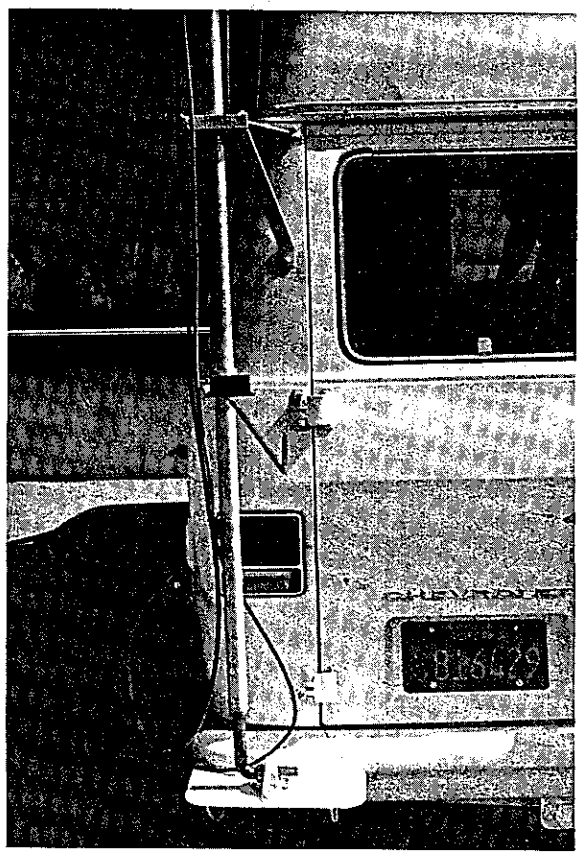

Figure 31 Mast Upper Mount

ClibPDF - www.fastio.com

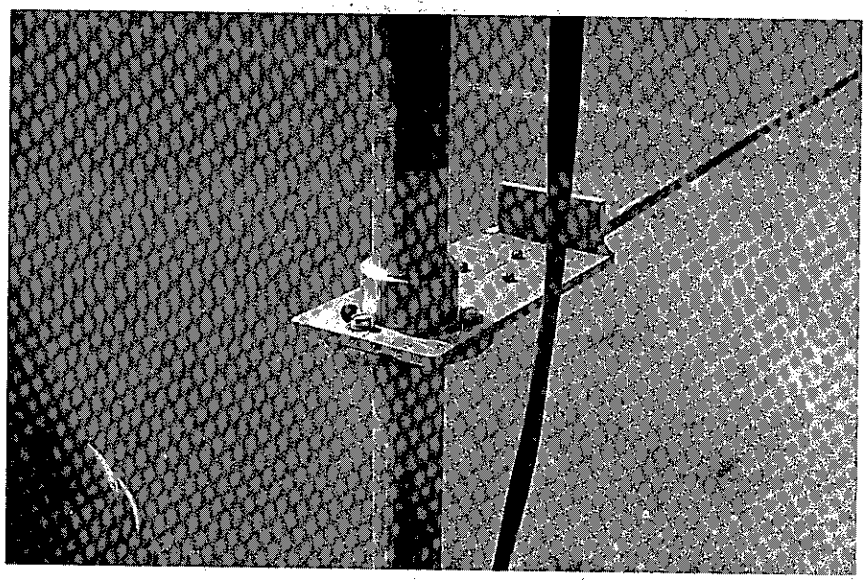

Figure 32 Mast Alignment Device

An alignment device has been built onto the tower to allow orientation of the sensor to north no matter what direction the van is facing (see Figure 32). This mechanism permits sighting any of the four points of the compass that are available in clear sight distance. For example if the van is pointing northeast the collar is clamped so that the sight line corresponds to the scribed North line on the tower. Then the sight arm is attached and a compass reading is taken approximately 50 feet away from the van (this eliminates effects of van metal mass). The compass is moved until the North - South line lies through the tower, then the sighting arm is rotated to correspond to this sight line. The tower is now locked in place and the sighting arm can be removed.

DATA ACQUISITION

Data are taken on Esterline Angus 2" chart recorders, one for each parameter measured. These recorders use impression type paper and provide an economical record of data.

The recorder panel (see Figure 33) is constructed with span and zero test functions and adjustment. Built-in input jacks are provided so that calibrated voltages can be used to test and calibrate the recorders. The analog signal coming into the recorders is either 0-1 volt or 0-5 volts and the recorder electronics were modified to accept these ranges. All signal lines are shielded and the shields are grounded. Event marking is accomplished by a switch on the center of the panel, this triggers all event markers on the right margin of the chart. This allows time marking for all charts for time correlation.

ClibPDF - www.fastio.com

Separate switching and fusing is built into the panel for each recorder for versatility of operation. There are parallel signal jacks on the front of each analyzer so that an auxillary 10" chart recorder can be used for calibration setup or for trouble shooting.

In the future it is planned that magnetic tape cassettes will be incorporated into the system for data acquisition. Space is provided in the main instrument rack for this equipment.

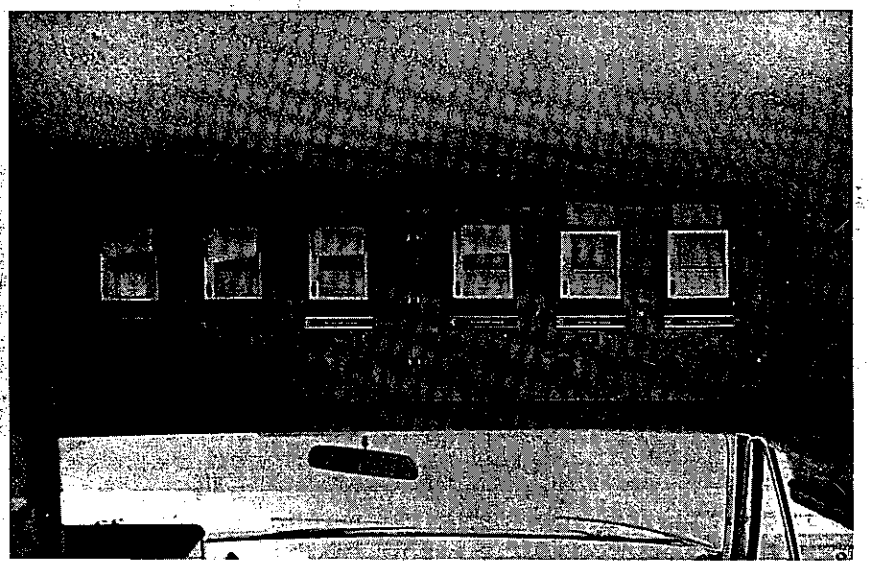

Figure 33 Recorder Panel

ClibPDF - www.fastio.com

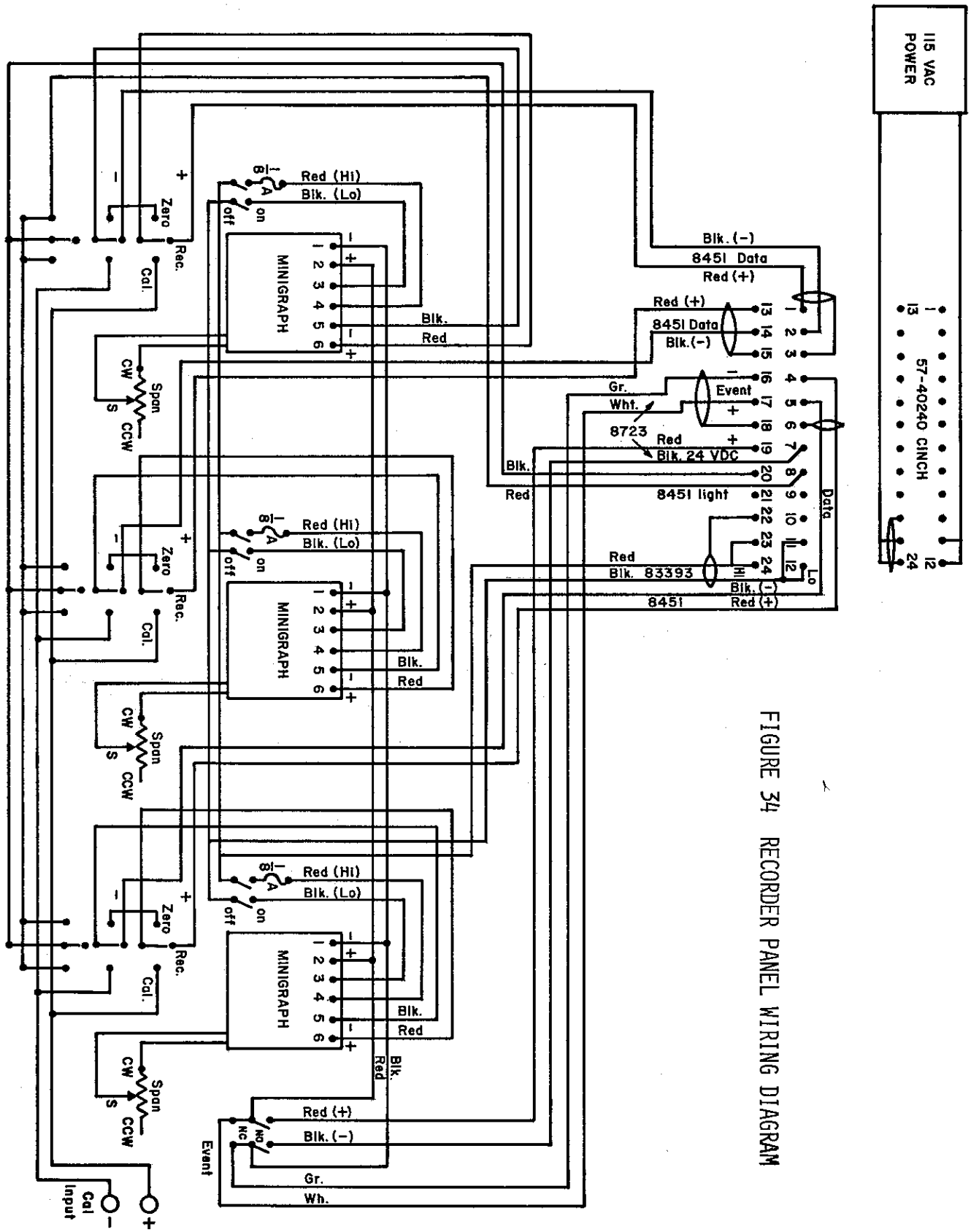

FIGURE 34 RECORDER PANEL WIRING DIAGRAM

ClibPDF - www.fastio.com

CALIBRATION

The primary calibration for this system is performed monthly by the Air and Industrial Hygiene Laboratory, California Department of Public Health. Their calibration procedures are based on accepted reference methods.

"Zero" air, as used in the following discussion, is synthetic air free from traces of carbon monoxide, hydrocarbons or oxides of nitrogen.

Span gas is a specific concentration of the pollutant in nitrogen or synthetic air, which is usually about 80% of full scale of most commonly used analyzer range. Other pollutant concentrations can be used near mid-range to check linearity.

The van calibration system is designed to be used at regular intervals (daily-weekly) for secondary calibration. This consists of in-use "zero" and up-range "span" checks. The carbon monoxide, oxides of nitrogen, and total hydrocarbon are calibrated with bottled gases carried on board. These gases are given concentration values by the Transportation Laboratory, Environmental Improvement Section. The values are determined by analysis using an analyzer set up with "gold bottle standards"; this gives all satellite analyzers a common base line.

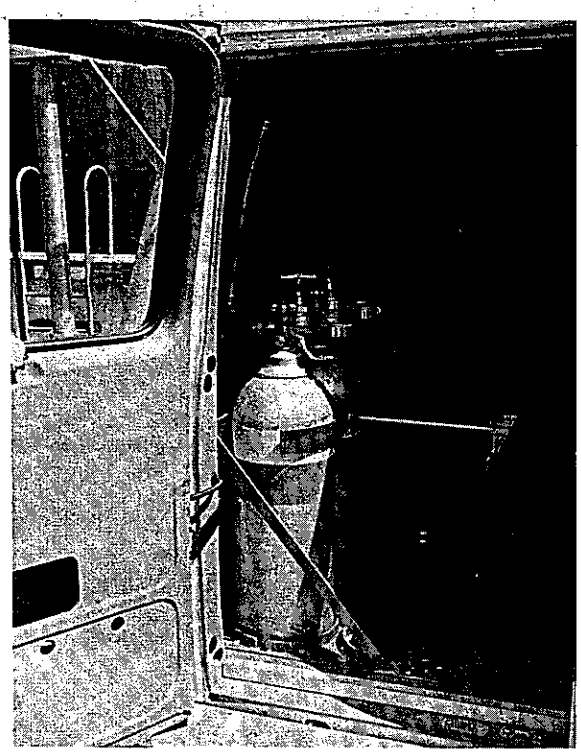

Figure 35 Calibration Gas Cylinders

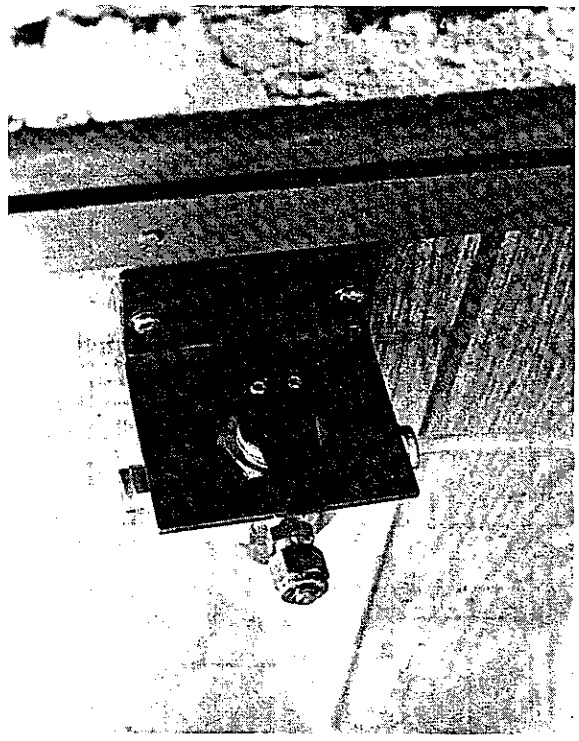

Figure 36 Valve for Zero and Span Gases

ClibPDF - www.fastio.com

The "gold bottle" values are derived from analysis performed by the California Air Resources Board Laboratory and by the Air and Industrial Hygiene Laboratory, (AIHL), California Department of Public Health.

For carbon monoxide analysis the van carries "zero" air and span gas of 80 to 90 ppm carbon monoxide in Dry Nitrogen for 0-100 ppm range span gas.

The hydrocarbon analyzer is spanned with bottled gas calibrated by Department of Public Health (AIHL). It consists of methane and propane in air; concentrations vary so as to be comparable to local ambient levels.

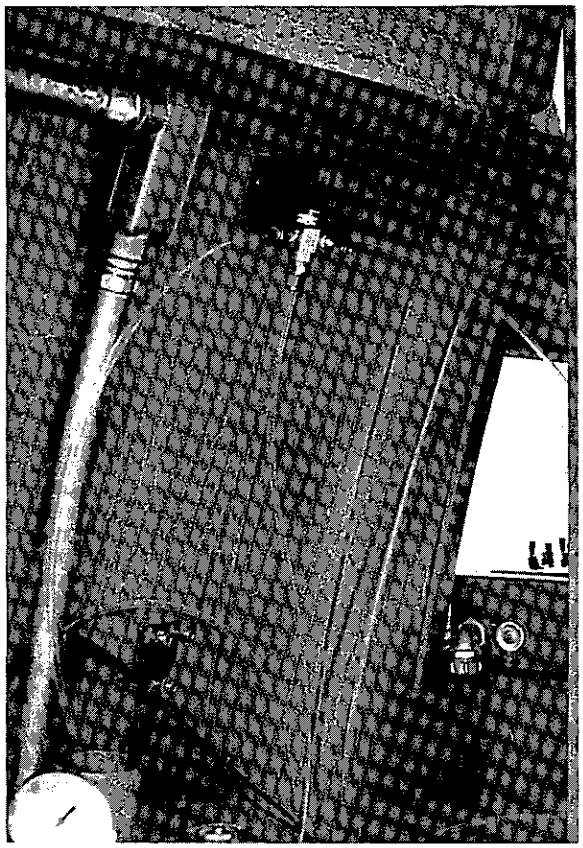

Figure 37 Calibration Valve Location

The oxides of nitrogen analyzer utilizes a scrubber as mentioned previously, to obtain "zero" air and uses 4 ppm nitric oxide in nitrogen as a span gas. All bottled gas systems require regulation to supply gases at working pressures. All regulators are two

ClibPDF - www.fastio.com

stage stainless steel diaphragm oxygen service type. The main point here is to coordinate fittings on bottles (from private leaser - gas supply house) to that required by regulations for safety; CGA 350 for carbon monoxide, CGA 580 for nitrogen, etc.

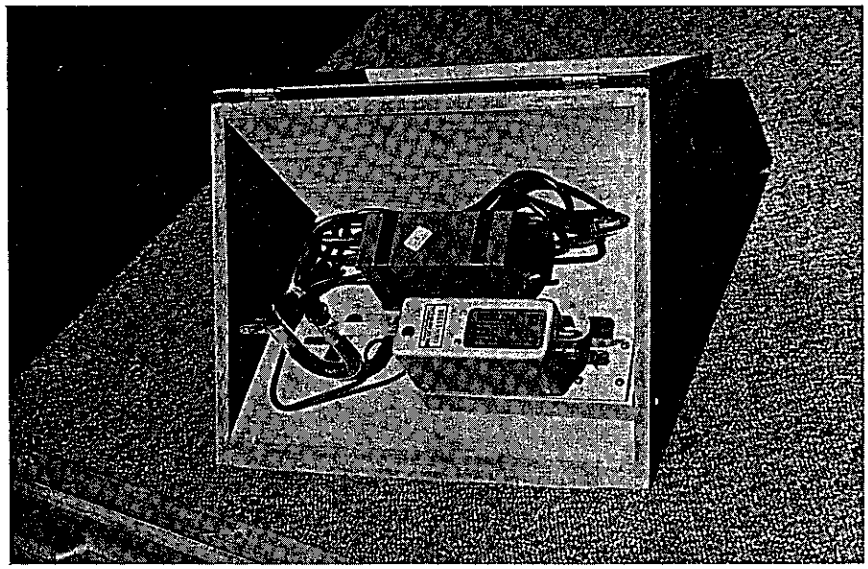

Figure 38 Ozone Generator

The ozone analyzer is checked bi-weekly with an ozone generator to determine system accuracy.

The ozone is generated by means of exposing an air stream in a quartz tube to short wave ultra-violet light at 1849A°. The concentration is varied by shielding the lamp with a cover which is marked in 5 mm increments for reproducible settings.

The incoming air should be dry and ozone free. A simple charcoal or molecular sieve filter will perform both functions.

Ozone decomposes readily on most surfaces. Care should be taken to change the filter frequently, if one is used, and to ensure that the sample lines to the instrument are clean and of a material such as glass or teflon which is inert to ozone.

Field checkout is accomplished by plotting a curve of ozone output from the generator to analyzer reading. This is done when the analyzer has its first "primary calibration" by the Air and Industrial Hygiene Laboratory, then checked bi-weekly during field operation. Gross deviation indicates need for re-calibration. The life of the pen-ray lamp is very long (10,000 hrs) at a relatively constant output, therefore it provides a good check

ClibPDF - www.fastio.com

system. The analyzer itself has an internal electronic check system to monitor deterioration of its internal light source, related electronics or clouding of the optics due to settlement of particulates. (See Section on ozone analyzer for principle of operation.)

The meteorological sensor is factory calibrated on delivery and is periodically re-calibrated in the Transportation Laboratory wind tunnel at the wind speeds for normal monitoring conditions (40 mph and below).

The Hi-Vol particulate sampler is calibrated for air flow according to the test method (see Appendix III).

ClibPDF - www.fastio.com

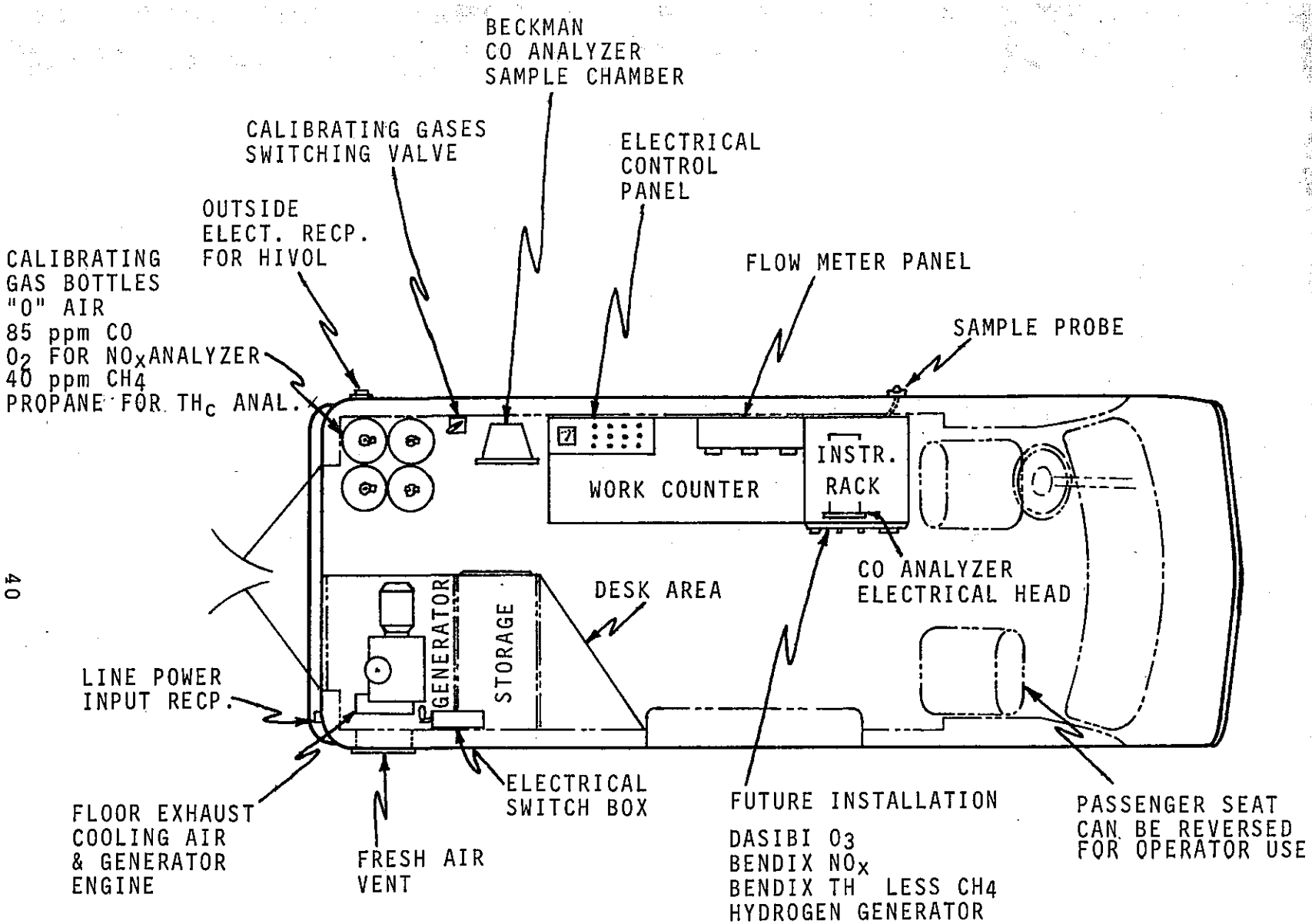

AIR MONITORING LAB
CHEVY LONG W.B.
MINI VAN

ClibPDF - www.fastio.com

DESIGN IN RETROSPECT

The two prototype vans have been in field operation for 2 years. There are a few changes to the basic design that now appear desireable. They are as follows:

1) Use a step-side van body style with a 75" interior height. These can be purchased in several wheel base lengths and body dimensions depending on the amount of equipment to be accommodated. Air conditioning (AC powered) and insulation are factory options. A main advantage is straight, finished walls and 90% clear floor space. This makes for easier equipment installation as well as design layout.

2) After sheeting the metal ribbed floor with plywood seamless cushion-type linoleum should be considered in place of carpet due to soiling problems.

3) The carbon monoxide analyzer should have ranges of 0-50, 0-100 ppm instead of 0-100, 0-300 ppm unless there are special cases where tunnels or toll collection area studies are to be made. Ambient levels have been found to be below 50 ppm about 90% of the time based on field measurements in rural and urban areas including Los Angeles.

4) The analyzer rack should be relocated so that back access is possible. The present installation is such that the instruments can be pulled out on guides from the rack but access to the back would make maintenance much easier.

5) All exterior AC power circuits should be protected by a ground fault interrupter. This device senses circuit grounding problems and de-activates the electrical supply.

6) Use an oilless type main vacuum pump. This will prevent any contamination of the hydrocarbon analysis. These carbon vane type pumps are readily available in this size. They do not last as long as the oil-type but are re-built easily.

ClibPDF - www.fastio.com

TABLE 1

CALIBRATION METHODS AND SUPPORT GASES

Analyzer	Method	Primary or Secondary	Gases Required	Cyl. Size*	Cyl. Life
CO	(NDIR)	Primary	Zero & Span	80 cu.ft. Air	2 Months
	Bottled Gases		Air	65 cu.ft. Span	2 Months
O_3	(UV) O_3 gen.	Secondary	None		
NO_x	(Chemiluminescent)	Primary	NO Span	80 cu.ft. NO	2 Months
	Bottled Gas		Oxygen	100 cu.ft. O_2	2 Months
Hc	(G.C.)	Primary	CH_4 Span	80 cu.ft. . CH_4 Span	2 Months
	Bottled Gases		Zero Air	Zero Air	1 Week

*Volumn at 1600-2000 psi

ClibPDF - www.fastio.com

REFERENCES

1. Air Quality Manual Series CA-Hwy-MR-657082S-(1-6)-72, Beaton, J. L., Skog, J. B., Shirley, E. C., and Ranzieri, A. J., July 1972.

2. O'Keefe, Stevens, et al, Environmental Protection Agency.

3. Bulletin 4055-D, Beckman Instruments, Fullerton, Calif.

4. Bulletin (dated 1971) Dasibi Model 1003.

5. Introduction to Theoretical Meteorology, Seymour Hess.

6. Bulletin for Model 1003B Dasibi Corporation, Glendale, California.

7. Absolute Continuous Atmosp. Ozone Determination by Differential - U.V. Absorption, Betty A. Behl, Ph.D., Dasibi Corporation, Glendale, California, APCA 65th Annual Meeting, June 1972.

8. Department of Public Health Air Industrial Hygiene Lab. Dasibi U.V. Absorption, O_3 Analysis Method Equivilency.

9. Bulletin 4128, Beckman Instruments, Fullerton, California

10. O'Keefe, Stevens, et al, Environmental Protection Agency.

ClibPDF - www.fastio.com

APPENDIX I

(Parts List, Prices, & Manuf. Addresses)

ClibPDF - www.fastio.com

ANALYZERS	MANUFACTURER/MODEL	APPROX. COST
Carbon Monoxide	Beckman Instruments Process Inst. Division 2500 Harbor Blvd. Fullerton, CA 92634 NDIR Model 315BL	$ 3,700
Ozone	Dasibi Environmental 616 E. Colorado St. Glendale, CA 91205 Model 1003AH	3,200
Oxides of Nitrogen	Bendix Instruments Process Inst. Division Drawer 477 Ronceverte, W. VA 24970 Model 8101-B	6,000
Hydrocarbons	Bendix Instruments Process Inst. Division Drawer 477 Ronceverte, WV 24970 Model 8400	4,700
Meteorological Sensor	Meteorology Research Inc. P. O. Box 637 Altadena, CA 91001 Model MRI 1075	1,400
Hi-Vol Sampler	Misco Scientific 1825 Eastshore Highway Berkeley, CA 94710 Curtin Model 1251-223	450
Support Equipment		
Recorders	Esterline-Angus 137 N. Puente Avenue City of Industry, CA 91746 M25A09A6001 Mini Graphs	200

ClibPDF - www.fastio.com

ANALYZERS	MANUFACTURER/MODEL	APPROX. COST
Vacuum Pumps	Metal Bellows Corp. 20977 Knapp Street Chatsworth, CA 91311 Model MB-21	$ 65
Vacuum Pump	James Wilbee Co. 420 Market Street San Francisco, CA 94111 Gast Model 0211-V36A-68C	85
Generator	King Knight Co. 6202 Christie Avenue Emeryville, CA 94608 Kohler (Motor Home Type) Model 4MC21	950
Flow Meters	Fischer-Porter #10A3565A tube size to flow requirements, stainless steel fittings G. M. Cooke Associates 935 Pardee Street Berkeley, CA 94710	120
Fittings	Swageloc (Stainless Steel & Brass) Various types & prices Oakland Valve & Fitting Co. 5525 Marshall Street Oakland, CA 94608	
Instrument Rack	Bud 60-2610SB Sacramento Electronics 1219 S Street Sacramento, CA 95816	210
Tubing	Teflon (FEP Type) 1/4" & 3/8" O.D. The Flurocarbon Co. 550 Ellis Street Mountain View, CA 94040	.85 & 1.30/ft.

ClibPDF - www.fastio.com

ANALYZERS	MANUFACTURER/MODEL	APPROX. COST
Counter Base & Top	Permalab Equip. Corp. 999 Rancho Conejo Blvd. Newbury Park, CA 91320	$ 150
Valves	Whitney Valves	
	Example: 18VF8 1/8" FPT Brass	14.30
	Oakland Valve & Fitting Co. 5525 Marshall Street Oakland, CA 94608	
Calibration Gases	Example:	
	85 ppm CO in Dry Nitrogen #80 size bottle	20.80 each
	Airco Specialty Gases 575 Mountain Avenue Murray Hill, NJ 07974	
Regulators	Two-Stage Pressure Regulators Victor VTS-400D	50.70 each
	Victor of California P. O. Box 15070 Sacramento, CA 95813	
Instrument Shock Mounts	Barry Cupmounts C-2090-T6	6.00 each
	Barry Controls 2323 Valley Street Burbank, CA	
Filters	Hoke Model #6315-F2B inline Micron Filter	6.00 each
	Con-Val 412 Pendleton Way Oakland, CA 94621	
Ground Fault Interrupter	(20 amp) Outdoor Type	40.00 each
	Sears Catalog #34A5324	

ClibPDF - www.fastio.com

APPENDIX II

DRAWINGS LIST

ClibPDF - www.fastio.com

Recorder Panel D-791

Flow Meter Panel D-792

NDIR Analyzer D-793

Pressure Bottle Rack D-794

Power Switch Panel D-795

Air Sample Manifold D-796

ClibPDF - www.fastio.com

APPENDIX III

OPERATION PROCEDURES

(These procedures for field operation were developed by California Transportation District 04 primarily from manufacturer's recommendations.)

ClibPDF - www.fastio.com

NDIR START UP AND CALIBRATION PROCEDURES

Beckman Model 315BL Infrared

Analyzer: Range #1 Idle
Range #2 0-300 ppm
Range #3 0-100 ppm

1. Turn power switch to Range #1.

2. Allow analyzer to warm up for at least one hour and preferably for eight hours. Place flow valve to calib., shut off CO pump.

3. Place power switch at off. Front panel meter should read zero; if not, adjust mechanical zero screw for zero reading. Turn on chopper switch.

4. Turn power switch to tune position.

   A. Compare present meter reading with previous readings obtained in tune mode (see record book). Present and past readings should agree to within (-4) of the smallest scale divisions. If so, proceed to Step 5. If not, see 4B.

   B. Proceed to tune oscillator. Leave locknut on the tuning screw alone. Turn tuning screw clockwise until indicator on meter just drops back, then note that maximum. Take 75% of the maximum, turn screw CCW and this will be the new tune reading. If this procedure doesn't work, then tune oscillator as per Section 5.1, page 29 of the factory manual.

5. Set gain control to 1.00. Turn power switch to Range 3.

6. Flow zero gas through the sample cell. 1-liter per min., minimum output pressure on regulator gauge. Adjust to zero on meter with zero adjust control.

7. Turn gain control to normal operating setting, see record book, or if this is not known, use setting of 5.00.

8. Check zero reading on meter, adjust zero adjust control if zero has drifted a little, <u>then lock</u> the zero adjust control.

9. Turn off zero gas. Instrument is now tuned and zeroed.

ClibPDF - www.fastio.com

10. Flow through the sample cell upscale gas appropriate to this range at 1-litter per min., minimum pressure. For all flow meter settings, use available charts. Upscale gas is usually about 80% of operating range.

A. From calibration curve determine the correct meter reading for the selected span gas or use any additional special instructions.

B. Adjust front panel gain control to correct meter reading as determined from calibration curve.

C. Lock gain control at this setting.

D. Turn off upscale span gas.

E. Purge sample cell with zero air.

F. If meter zeros, turn flow valve to sample.

G. Turn on vac pump and CO pump.

H. Set vac flow meter.

I. Set CO flow meter and begin (turn on recorder).

NOTE: If meter does not zero, again set zero and lock, then repeat Step 10. There may also be an outside interference, e.g., power line, etc.

If meter still does not zero after further attempts, adjust shutters: set gain to 0; set zero to 5.

J. Move both reference (white pegged tube) and sample optical shutters out away from center of the source beams.

K. If meter reads below zero, move sample shutter into the beam until the meter reads close to zero. Reference shutter should be set wide open (fully toward center).

L. If meter reads above zero, move reference shutter into the beam until the meter reads close to zero. Sample shutter should be set wide open (fully toward center).

M. Go back to Step 6 and proceed stepwise.

ClibPDF - www.fastio.com

11. Note date, time, location and what is being tested on recorder chart.

To Leave Running: Range at 1
Gain at 0
Zero at 5
Chopper Switch Off

Things you can touch:

1. Mechanical Zero
2. Tune Position
3. Range 1 IDLE
4. Range 2 0 to 300 ppm
5. Range 3 0 to 100 ppm
6. R34 POT DON'T TOUCH!
7. Bias OK
8. Range 3 POT OK
9. 120 Volt POT DON'T TOUCH! Change power supply
10. Fuse OK
11. Stainless steel filter - change every 6 months.

NOTE: If you change the zero control or move the span adjustment POT, the calibration is out of adjustment. An adjustment of the gain control does not require a readjustment of the zero control.

Recorder Panel (6" per hour - paper good for 124 hours)

All input calibration voltage is 0 to 5 V D.C.
Zero - Set mechanical zero
Calib - Use voltage standard to set span to 5 V
Record - Normal run position

10" Recorder

1. Tune and zero instrument
2. Zero recorder
3. Use recorder when flowing upscale calibration gas for the ranges, then make the gain adjustments using the recorder chart rather than the panel meter.

ClibPDF - www.fastio.com

VAN - MAINTENANCE

1. Change NDIR Filter - 6 months
2. Change Ozone Filter - 6 months
3. Change Probe Filter - Daily
4. Check main pump oil (10 wt. nondetergent) - Daily
5. Check generator oil (30 wt. detergent)
6. Check generator air filter

VAN - EQUIPMENT START UP

1. Main switch off - important
2. Generator switch to gen. or outside
3. If on gen., start gen. (outside power cord "must not" be plugged in
4. If on outside - only now plug in cable
5. Main switch on

NOTE: With air conditioner on, outside source must be 30 AMP.

VAN - MET HEAD

1. Switch to auto, not A or B setting
2. Turn to true north
3. Correlate to Main Tower
4. Only maintenance is a fuse replacement
5. No temperature meter.

ClibPDF - www.fastio.com

HI-VOL SAMPLER
(General Information, See Calif. Test Method No. 706-A)

Site Selection:

1. Be representative of area at large.

2. So located that Hi-Vol will not be affected by local sources such as road dust which is re-entrained by vehicles.

3. Ideal site is between 10 feet and 50 feet above ground, no obstructions. No obstructions is defined as a line of sight of 30° with the horizon (vertical angle) and not hitting any thing for 360° (horizontal angle) around the sampler.

4. The site should be selected to prevent vandalism.

NOTE: For now, treat similar to that exposure used for the air sampling pumps.

Principle:

Air is drawn into a covered housing through a filter by means of a high volume blower (40 to 60 cfm. approx. 2000 m^3 in 24 hours). This allows particles in the range of 0.1 μm dia. to 100 μm dia. to be collected on the filter. From the measurements of the mass collected and the volume of air sampled, the mass concentration of particles in the ambient air may be determined, also lead count.

Filters: 8" x 10" tared sheets of flash-fired glass fibre, screen against light for "pin holes" and other defects. Number the filter on two diagonally opposite corners.

Unfit if - torn or ruptured
pieces are left sticking to face plate
starting and/or stop time are unknown
streaks of dust extend under gasket
improperly shipped.

Ship: Fold lengthwise (perpendicular to longest dimension) with the dirty side in, place in glassine envelope, then into manila envelope. Return to laboratory for analysis.

Sampling

Field:

1. Plug in electric cord (AC power source)
2. Turn on switch in van on control panel
3. Remove loose dust beneath sampler
4. Turn on sampler power switch
5. Turn on trip switch.

CT-Lab-Sacto
2/75 300

ClibPDF - www.fastio.com

ClibPDF - www.fastio.com

ClibPDF - www.fastio.com

ClibPDF - www.fastio.com