4364

STATE OF CALIFORNIA—BUSINESS AND TRANSPORTATION AGENCY

RONALD REAGAN, Governor

DEPARTMENT OF PUBLIC WORKS
DIVISION OF HIGHWAYS
MATERIALS AND RESEARCH DEPARTMENT
5900 FOLSOM BLVD., SACRAMENTO 95819

c.2

M&R No. 666645

December 29, 1972

TRANSPORTATION MATERIALS
& RESEARCH LIBRARY

Inspector D. L. Gibson
Commander
Safety Services Division
California Highway Patrol
Sacramento, California

Dear Sir:

Submitted for your consideration is a report of:

SYNTHETIC LOAD BINDER EVALUATION

72-61

Very truly yours,

JOHN L. BEATON
Materials and Research Engineer

72-61

ClibPDF - www.fastio.com

4364

STATE OF CALIFORNIA—BUSINESS AND TRANSPORTATION AGENCY

RONALD REAGAN, Governor

DEPARTMENT OF PUBLIC WORKS
DIVISION OF HIGHWAYS
MATERIALS AND RESEARCH DEPARTMENT
5900 FOLSOM BLVD., SACRAMENTO 95819

M&R No. 666645

December 29, 1972

Inspector D. L. Gibson
Commander
Safety Services Division
California Highway Patrol
Sacramento, California

Dear Sir:

Submitted for your consideration is a report of:

SYNTHETIC LOAD BINDER EVALUATION

Under Direction of

Eric F. Nordlin

Principal Investigator

J. R. Stoker

Project Engineer and Report by

R. L. Blunden

Very truly yours,

JOHN L. BEATON
Materials and Research Engineer

ClibPDF - www.fastio.com

ABSTRACT

REFERENCE: Nordlin, E. F., Stoker, J. R., and Blunden, R. L., "Synthetic Load Binder Evaluation", State of California, Department of Public Works, Division of Highways, Materials and Research Department, Research Report No. 666645.

ABSTRACT: New load binder systems complete with hardware, and samples of synthetic webbing were evaluated. Breaking strength and elongation at failure were determined for the complete systems and compared with the manufacturers' load ratings. Samples of synthetic webbing were exposed to different exposure conditons -- abrasion, ozone, accelerated weathering, moisture, and temperature extremes -- to determine the effects of the exposure conditions on breaking strength and elongation. Four samples of new webbing were tested for creep.

The new load binder systems failed at loads equal to or greater than the manufacturers' load ratings in most cases. Failures usually occurred in the synthetic webbing. Some of the hardware distorted at failure loads, but remained operable in all cases.

Dacron webbing elongated less under load than nylon or cordura; however, nylon appeared to have the greatest breaking strength. Moisture seemed to adversely affect nylon more than dacron or cordura. Exposure to ozone and temperature extremes as applied in this test program did not seem to significantly affect the webbing types tested. All were affected by exposure to abrasion and accelerated weathering.

Creep did not appear to be significant in any of the four webbing types tested.

KEY WORDS: Load binder, synthetic webbing, load rating, breaking strength, elongation, creep, failure, ozone, accelerated weathering, abrasion.

ClibPDF - www.fastio.com

ACKNOWLEDGEMENTS

The comments and assistance from the following personnel of the California Highway Patrol were instrumental in the completion of this project:

Sgt. P. J. Sullivan
Sgt. R. C. Weeks
Lt. J. R. O'Donnel
Lt. C. E. King

Mr. R. G. McLaughlin of the Materials and Research Department aided in the initial design and execution of the test program.

The tests were documented with still photographs by Mr. David L. Podbreger for the California Highway Patrol.

ClibPDF - www.fastio.com

TABLE OF CONTENTS

	Page
ABSTRACT	
ACKNOWLEDGEMENTS	
TABLE OF CONTENTS	
INTRODUCTION	1
GENERAL	2
PURPOSE AND DEFINITIONS	3
PROJECT DESCRIPTION	4
TEST METHODS	5
TREATMENT METHODS	6
DISCUSSION OF TEST RESULTS	8
CONCLUSIONS	10
TABLE 1 - LIST AND DESCRIPTION OF LOAD BINDERS	11
TABLE 2 - SUMMARY OF TEST RESULTS, NEW LOAD BINDER SYSTEMS	12
TABLE 3 - SUMMARY OF TEST RESULTS, SYNTHETIC WEBBING	13-15
FIGURE 1 - SPLIT DRUM TYPE JAWS	5
FIGURE 2 - SUMMARY CURVES, NEW 1-3/4" BINDERS	16
FIGURE 3 - SUMMARY CURVES, NEW 2" BINDERS	17
FIGURE 4 - SUMMARY CURVES, NEW 3" BINDERS	18
FIGURE 5 - SUMMARY CURVES, 4" BINDERS	19
FIGURE 6 - SUMMARY CURVES, WEATHER-OMETER	20
FIGURE 7 - SUMMARY CURVES, CREEP	21
PROPOSED TEST PROCEDURE - LOAD BINDER ASSEMBLIES	22
PROPOSED TEST PROCEDURE - SYNTHETIC WEBBING	24

ClibPDF - www.fastio.com

SYNTHETIC LOAD BINDER EVALUATION REPORT

INTRODUCTION

Synthetic webbing load binders are currently being used by the trucking industry in California. The webbing allowed at the present time must be at least four inches wide, 5/32 inches thick, and have a minimum breaking strength of 11,500 pounds. A specification for maximum elongation in a web binder under load does not yet exist in California. The use of web binder systems is limited to loads such as lumber, paper, hay, jute, cotton, and a few others.

Interest has developed recently for smaller, lighter and less expensive synthetic webbing load binders than those presently allowed. The cost of high quality hardware and synthetic webbing is now competitive with chain, cable, and rope binding systems in some applications. The military has used synthetic webbing successfully in securement systems in all climates on several forms of transportation for many years. The civilian air cargo industry uses synthetic webbing systems almost exclusively. Lightweight, ease of handling, quick fastening and releasing capabilities, and ability to absorb shock loading appear to be some of the advantages offered by synthetic webbing systems.

In order to develop standards assuring the safe use of synthetic webbing load binder systems on state highways, the California Division of Highways, Materials and Research Department, working with the California Highway Patrol, investigated a small portion of webbing and systems on the market at this time. This report is a brief summary of that investigation.

ClibPDF - www.fastio.com

GENERAL

The original test program was designed by representatives from the Materials and Research Department and the California Highway Patrol. Some decisions regarding tests and treatments (test exposure conditions) were made as the test program progressed and as results of various treatments became known. All webbing and load binder systems were selected and supplied to the Materials and Research Department by the Highway Patrol. All tests and treatments were conducted at the laboratory.

The test program involved four webbing types initially, but was later expanded to include ten additional webbing types and six additional load binder systems. On the whole the ten additional webbing types were not exposed to different treatments but were included primarily to compare actual breaking strengths with the manufacturers' load ratings. The load binder systems were included to observe breaking strength and elongation of the systems complete with hardware.

ClibPDF - www.fastio.com

PURPOSE AND DEFINITIONS

Purpose

This project was conducted for the California Highway Patrol to:

1. Evaluate load binder systems proposed for use by the trucking industry on California state highways.

2. Determine the effects of various treatments on load binder webbing.

3. Develop a test procedure for future load binder system evaluations.

Definitions

The following definitions apply to this study:

1. Load binder assembly or system -- A unit consisting of synthetic webbing, buckles or clasps and any additional hooks, D rings or hardware attached to the webbing.

2. Load binder webbing -- The webbing only, exclusive of any additional stitching for fastening devices or hardware.

3. Ultimate, breaking or ultimate breaking strength -- The maximum load in pounds occurring prior to a sudden physical failure of any component in a load binder system.

4. Elongation or percent elongation -- Computed to the nearest 0.1 percent using the formula:

$$e = \frac{(L_i - L_o)}{L_o} 100$$

Where e = percent elongation
L_1 = distance between gage lines on a sample at any load
L_o = distance between gage lines on a sample at initial 100 pound preload.

5. Treatments -- Test exposure conditions consisting of abrasion, extreme temperatures, moisture, ozone, and accelerated weathering.

6. Webbing type -- Classified according to manufacturer, material composition, and width.

ClibPDF - www.fastio.com

PROJECT DESCRIPTION

The project was divided into two main parts.

Part One -- New load binder systems complete with hardware were evaluated in Part One (see Table 1 for a list of systems tested). One test procedure was used to determine breaking strength and elongation at failure of five different systems. The actual breaking strengths were recorded and compared with the manufacturer's load ratings for each system. One or more samples represented each system. A total of seven samples were tested. None of the systems were exposed to any treatments prior to testing.

Part Two -- Synthetic webbing was evaluated in Part Two (see Table 1 for a list of webbing tested). Webbing was tested in new and treated conditions to determine the effect of various exposure conditions on strength. Two different test procedures were used as described below:

"Test 1 -- Breaking Strength and Percent Elongation" was employed on samples of new webbing and samples of webbing subjected to different treatments. Approximately 250 samples were tested.

"Test 2 -- Creep" was employed on four samples of new webbing only. No treated webbing and no additional new webbing types were investigated in this test because of time and funding limitations.

ClibPDF - www.fastio.com

TEST METHODS

Test 1 -- Breaking Strength and Percent Elongation.

The test device consisted of two sets of split-drum-type jaws approximately 3-3/4 inches in diameter and 4 inches wide conforming to Mil-W-4088 (see Figure 1). The jaws were attached to a 60,000 pound capacity Baldwin universal testing machine.

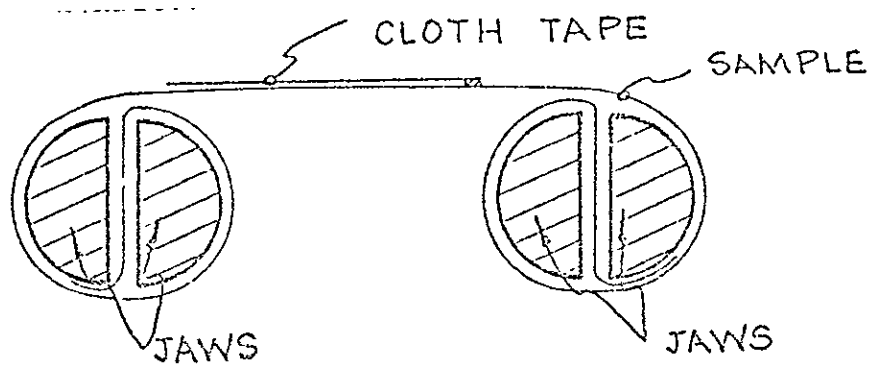

FIGURE 1

Three samples, each approximately 42 inches long, comprised one test. Each sample was placed in the jaws and subjected to a 100 pound initial load. Gage lines were marked 5 inches apart on the sample, and a cloth tape was attached to measure elongation.

The load was applied to the sample in two distinct phases at a jaw separation rate of 2 ± 1 inch per minute. The first phase consisted of loading the sample to a maximum of 7500 pounds and recording the elongation at load levels of 1000, 2500, 5000, and 7500 pounds. The load was then reduced to 100 pounds and the permanent set or elongation determined. The second phase consisted of loading the sample to failure, recording the load at failure and recording elongation at load levels of 500, 1000, 2000, 2500, 3500, 5000, 6000, 7500 pounds, and at failure when possible.

Breaking strength and percent elongation were calculated as an average of all three samples for each test.

Test 2 - Creep (Load Relaxation).

One sample per test was placed in a Series 810 MTS universal testing machine. Each sample was initially loaded to 5000 pounds. The load was reduced to 1000 pounds, and the test jaws were locked immediately, allowing no change in displacement between the jaws. The load in the sample was recorded at various intervals over a period of 24 hours minimum. A decrease in load in the sample was an indication of elongation or creep in the sample. An increase in load in the sample was an indication of elastic contraction or negative creep in the fibers toward their original length at no load. A total of four samples were tested.

ClibPDF - www.fastio.com

TREATMENT METHODS

Treatment 1 -- New.

Samples of new synthetic webbing were subjected to Test 1 in the "as received" condition from the manufacturer.

Treatment 2 -- Abrasion.

Three samples per webbing type were individually abraded across a hexagonal bar for approximately 2500 cycles per sample. One end of each sample was clamped to an oscillating wheel, and the other end was clamped to a five pound weight. One cycle was completed when the weight had moved from and returned to its initial starting position. The cycling rate was approximately 31 cycles per minute, or 2500 cycles in one hour and twenty minutes.

Following the abrasion each sample was inspected visually and subjected to Test 1 or other treatments. The test apparatus is fully described in Federal Standard 191, Test Method 5309.1.

Treatment 3 -- Temperature.

The temperature treatment was divided into two parts. Exposure to a high temperature extreme (180° F) was designated as "Part A". Exposure to a low temperature extreme (-60° F) was designated as "Part B".

Three samples per webbing type were placed in an oven at 180° F for a minimum of four hours for "Part A". Upon removal from the oven, the samples were inspected visually for discoloration or apparent material deterioration and tested immediately in the Baldwin testing machine for performance of Test 1.

For "Part B" three samples per webbing type were placed in a cold box at -60° F for a minimum of four hours total. After approximately three hours the samples were removed from the cold box, twisted and bent over a 1.0 inch diameter mandrel and returned to the cold box. Any impaired flexibility, embrittlement or apparent material failure was noted. Following final removal from the cold box, the samples were immediately placed in the testing machine for performance of Test 1.

In both Part A and Part B, no attempt was made to maintain the samples at the temperature extremes once they were placed in the testing machine. However, the samples were tested immediately following their exposure to temperature. The temperature of the samples at failure was not noted.

Treatment 4 -- Moisture.

Three samples per webbing type were immersed in a container of distilled water at room temperature for a minimum of one hour.

ClibPDF - www.fastio.com

The samples were removed from the water and immediately placed in the Baldwin testing machine for Test 1. As the samples elongated, much of the water contained in the samples drained. No attempt was made to keep the sample thoroughly saturated while it was in the testing machine.

Treatment 5 -- Ozone.

Three samples per webbing type were placed in an Orec automatically controlled ozone test chamber, and subjected to an ozone concentration of 10 parts per million for seven days at approximately 104° F. Upon removal from the ozone chamber, the samples were subjected to Test 1 or additional treatments.

Treatment 6 -- Accelerated Weathering.

An Atlas Weather-Ometer conforming to ASTM Designation Type E was used for all accelerated weathering. INitially the samples were weathered using a cam which provided 60 minutes light plus 60 minutes darkness and moisture per cycle. A second cam which provided 102 minutes light plus 18 minutes light and moisture per cycle was then used on different samples to determine if the second cam was more severe than the first.

Three samples of each of four webbing types were initially subjected to weathering periods of 50, 100, 150, 200, and 250 cycles. Upon removal from the Weather-Ometer, the samples were allowed to dry at room temperature prior to undergoing additional treatments or Test 1. In most cases, samples subjected to additional treatments after weathering were weathered at 100 cycles only.

Treatments 7A-7F -- Weathering Plus Additional Treatments.

Treatments 7A-7F involved samples subjected to 100 cycles of accelerated weathering and combinations of some or all of the other treatments. Some combinations of treatments did not seem to affect the ultimate breaking strength significantly more than single treatments for some systems and were thus deleted from the test program for those systems.

ClibPDF - www.fastio.com

DISCUSSION OF TEST RESULTS

Part One -- New Load Binder Systems

Refer to Table 2 for a summary of test results.

Six of the seven samples tested failed at a load greater than the manufacturer's load rating.

Six of the seven systems failed in the webbing material or in the stitching attaching the hardware to the webbing. The one hardware failure occurred in a forced "D" ring at a load thirty-two percent greater than its rated capacity. In most cases the buckles were slightly deformed after each test, but were still fully operable.

Elongations at failure ranged from approximately fifteen to twenty-five percent. However, these values include any slippage that might have occurred between the webbing and the hardware.

Part Two -- Synthetic Webbing, New and Treated

Test 1 -- Breaking Strength and Percent Elongation.

Based on the results of this investigation, certain general statements regarding synthetic webbing and treatment effects on synthetic webbing can be made. It is important to note, however, that any statements regarding synthetic webbing apply only to the webbing tested in this investigation and not to synthetic webbing in general. Test results are summarized in Table 3.

The test results of new webbing indicate that dacron generally has the least breaking strength and elongation of any material type tested. Although nylon and cordura exhibited greater breaking strengths than dacron in most cases, elongations were considerably greater in all cases (see Figures 2, 3, 4, and 5).

The ozone treatment as employed in this testing program does not appear to significantly reduce the breaking strength of synthetic webbing. The breaking strength of one of four webbing types was reduced approximately ten percent after exposure to ozone. The three other webbing types exhibited little or no change in breaking strength after ozone exposure.

The moisture treatment appears to affect nylon webbing more than the other types tested. Dacron webbing appears to be the least affected by moisture.

ClibPDF - www.fastio.com

Only one of the four webbing types tested seemed to be significantly affected by temperature extremes. The loss in breaking strength was approximately ten percent for the Shelton binder 3 inch nylon webbing.

The abrasion treatment produced mixed results on the six webbing types tested. Two types exhibited an apparent increase in breaking strength and two types exhibited approximately a twenty-six percent decrease in breaking strength. More test data might have provided some insight into the apparent increase, but the subject was not pursued further for this project. Perhaps abrading the specimens for a longer period of time would have more clearly identified the abrading effects.

Accelerated weathering seemed to affect all the webbing types. A decrease in breaking strength is noticeable after fifty cycles of accelerated weathering. However, the data indicate that after one hundred cycles, accelerated weathering had no further adverse effect on Phoenix Trim WC3048. Apparently at least one hundred cycles in the Weather-Ometer is necessary to produce a significant decrease in breaking strength (see Figure 6).

For future testing of synthetic webbing of the general types tested, it appears that the ozone treatment and the temperature treatment could be eliminated from the testing program. Abrasion, moisture, and the accelerated weathering treatments should be included. It may not be necessary to determine the separate effects of each treatment, but instead one test could be run to determine the cumulative or total effect of the different treatments.

Test 2 -- Creep.

The results of the creep test are shown in Figure 7. Of the four webbing types tested, dacron (Phoenix Trim WD343) exhibited the greatest load loss, approximately 12.2 percent in a twenty-four hour period.

Sufficient creep data was not generated by this project to allow statements regarding creep to be made with a high degree of confidence. However, based on the limited results of the creep tests conducted in this project, short term creep does not appear to be significantly large for any of the four webbing types tested to warrant any precautions against the use of any one type.

ClibPDF - www.fastio.com

CONCLUSIONS

The breaking strengths and elongations at failure of six different load binder assemblies were determined. Failures in the systems tested usually occurred in the webbing. The hardware appears capable of withstanding the manufacturer's rated loads for the system when subjected to that load one time. Repeated loading of the hardware at the manufacturer's load rating was not investigated.

The short term creep characteristics of four webbing types were determined. Creep does not appear to be a major problem for the types tested at the load levels used for the creep tests in this project.

Exposure to accelerated weathering, abrasion or moisture treatments appears to affect the webbing types tested more than exposure to ozone or temperature extreme treatments. However, significant differences among webbing types versus treatment effects was not clear or consistent in all cases. Consequently, more data is necessary to determine if one webbing type performs significantly better than any other type following exposure to all treatments.

ClibPDF - www.fastio.com

LIST AND DESCRIPTION OF LOAD BINDERS

Systems -- Part One

1. Aeroquip Corporation FE 10615C Dacron 1-3/4"
2. Aeroquip Corporation FE 10758A Corester 1-3/4"
3. Aeroquip Corporation FE 11183C Dacron 1-3/4"
4. Davis Aircraft Company FDC 5770 Nylon 2"
5. Aeroquip Corporation FE 11119C Nylon 4"

Webbing -- Part Two

1. Phoenix Trim Company WC 3048 Cordura 1-3/4"
2. Aeroquip Corporation FE 102G Cordura 1-3/4"
3. Aeroquip Corporation FE 104A Cordura 1-3/4"
4. Phoenix Trim Company WN 100 Nylon 2"
5. Phoenix Trim Company WN 1542 Nylon 2"
6. Phoenix Trim Company WC 3034 Cordura 2"
7. Phoenix Trim Company WD 342 Dacron 2"
8. Shelton Binder Company "Cinch Tite" Nylon 2"
9. Phoenix Trim Company Type IX Nylon 3"
10. Phoenix Trim Company WN 1543 Nylon 3"
11. Shelton Binder Company "Cinch Tite" Nylon 3"
12. Phoenix Trim Company WD 343 Dacron 3"
13. Shelton Binder Company S 126 Nylon 4"
14. Shelton Binder Company "Cinch-Tite" Nylon 4"

TABLE 1

ClibPDF - www.fastio.com

PART ONE

NEW LOAD BINDER SYSTEMS

ULTIMATE BREAKING STRENGTH AND ELONGATION AT FAILURE

SUMMARY OF TEST RESULTS

System Description	Manufacturer's Load Rating (Pounds)	Actual Breaking Strength (Pounds)	Elongation at Failure (Percent)	Failure Location
1. Aero FE 10615C	10,000	9,849	25.2	Webbing in buckle jaw
2. Aero FE 10758A Corester 1-3/4"	5,000	6,170	-	Stitching in webbing
3. Davis FDC 5770 Nylon 2"	5,000	5,280	22.8	Webbing in buckle jaw
4. Same as above	5,000	5,130	19.4	same
5. Aero FE 11183C Dacron 1-3/4"	10,000	13,440	17.5	same
6. Same as above	10,000	12,060	14.8	same
7. Aero FE 11119C	16,200	21,300	-	D ring on end of webbing

TABLE 2

ClibPDF - www.fastio.com

SUMMARY OF TEST RESULTS

BREAKING STRENGTH SHOWN IN POUNDS

ELONGATION AT FAILURE (%)

Treatment \ Webbing Type	1-3/4" Width		
	PT-WC 3048	A-FE 102G	A-FE 104A
Manufacturer's Load Rating-lbs.	7000	4500	7000
1. New	7880 (16.0)	6507 (15.6)	8333 (15.9)
2. Abraded	7941 (19.0)	4775 (14.5)	6117 (17.9)
3A. Temp (180° F)	7350 (17.0)		
3B. Temp (-60° F)	7500 (17.0)		
4. Moisture	7450 (16.0)	6292 (15.1)	7741 (16.5)
5. Ozone	7863 (17.9)		
6. Accel. Weather	6683 (15.6)	4942 (12.1)	8033 (17.0)
7A. Weather & Abrade	6633 (16.0)		
7B. Weather & Temp (180° F)	7000 (17.1)		
7C. Weather & Temp (-60° F)	6650 (16.0)		
7D. Weather & Moisture	6100 (13.7)		
7E. Weather & Ozone	8125 (18.1)		
7F. Weather, Abrade Hot, Cold, Wet		4033 --	5092 (11.9)

TABLE 3

ClibPDF - www.fastio.com

PART TWO - SYNTHETIC WEBBING

SUMMARY OF TEST RESULTS

BREAKING STRENGTH SHOWN IN POUNDS

ELONGATION AT FAILURE (%)

Treatment \ Webbing Type	2" Width				
	PT-WN 100	PT-WN 1542	PT-WC 3034	PT-WD 342	SB "C-Tite"
Manufacturer's Load Rating-lbs.	10,000	13,560	15,260	13,400	16,000
1. New	9,400 (26.2)	12,700 (22.3)	15,533 (20.0)	12,367 (14.5)	19,383 (21.0)
2. Abraded	10,270 (37.6)				
3A. Temp (180° F)	9,875 (33.8)				
3B. Temp (-60° F)	10,250 (35.5)				
4. Moisture	8,833 (28.5)	10,717 (21.4)	13,533 (20.2)	12,358 (14.3)	
5. Ozone	9,970 (27.1)				
6. Accel. Weather	9,408 (30.0)				
7A. Weather & Abrade	8,800 (28.5)				
7B. Weather & Temp (180° F)					
7C. Weather & Temp (-60° F)	8,650 (29.0)				
7D. Weather & Moisture	7,750 (28.4)				
7E. Weather & Ozone	7,567 (28.0)				
7F. Weather, Abrade Hot, Cold, Wet					

TABLE 3 - Continued

ClibPDF - www.fastio.com

PART TWO - SYNTHETIC WEBBING

SUMMARY OF TEST RESULTS

BREAKING STRENGTH SHOWN IN POUNDS

ELONGATION AT FAILURE (%)

Treatment \ Webbing Type	3" Width				4" Width	
	PT Type IX	PT-WN 1543	SB "C-Tite"	PT-WD 343	SB S126	SB "C-Tite"
Manufacturer's Load Rating-lbs.	9,000	19,680	18,000	20,764	11,500	22,400
1. New	10,233 (26.0)	20,983 (24.0)	21,400 (22.4)	18,500 (10.9)		25,350 (24.0)
2. Abraded			19,700 (21.4)	15,533 (13.0)		
3A. Temp (180° F)			19,750 (23.8)	19,300 (13.1)		
3B. Temp (-60° F)			19,450 (25.0)	18,525 (11.3)		
4. Moisture		16,933 (24.0)	17,541 (22.6)	17,966 (12.0)		
5. Ozone			19,100 (22.0)	18,767 (11.3)		
6. Accel. Weather			17,530 (21.5)	15,500 (9.3)		
7A. Weather & Abrade			18,675 (23.0)	15,300 (12.0)		
7B. Weather & Temp (180° F)				15,800 (12.8)		
7C. Weather & Temp (-60° F)			17,600 (23.1)	17,100 (10.7)		
7D. Weather & Moisture						
7E. Weather & Ozone			18,233 (22.0)	16,417 (9.4)		
7F. Weather, Abrade Hot, Cold, Wet						
Used, 2 years old					17,133 (18.5)	

TABLE 3 - Continued

ClibPDF - www.fastio.com

FIGURE 2

SUMMARY CURVES

NEW 1 3/4" BINDERS - WEBBING ONLY

LOAD VERSUS ELONGATION

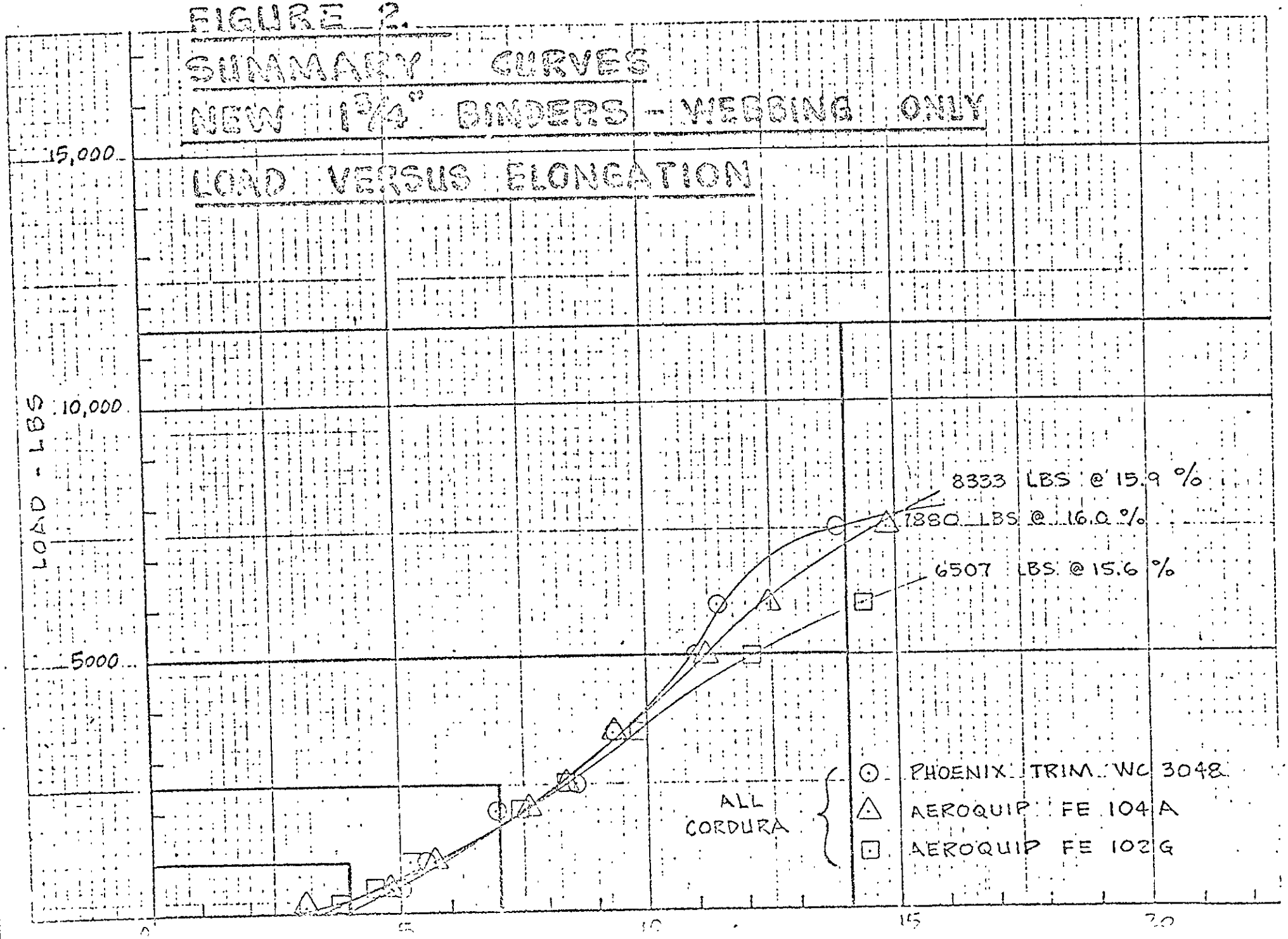

ClibPDF - www.fastio.com

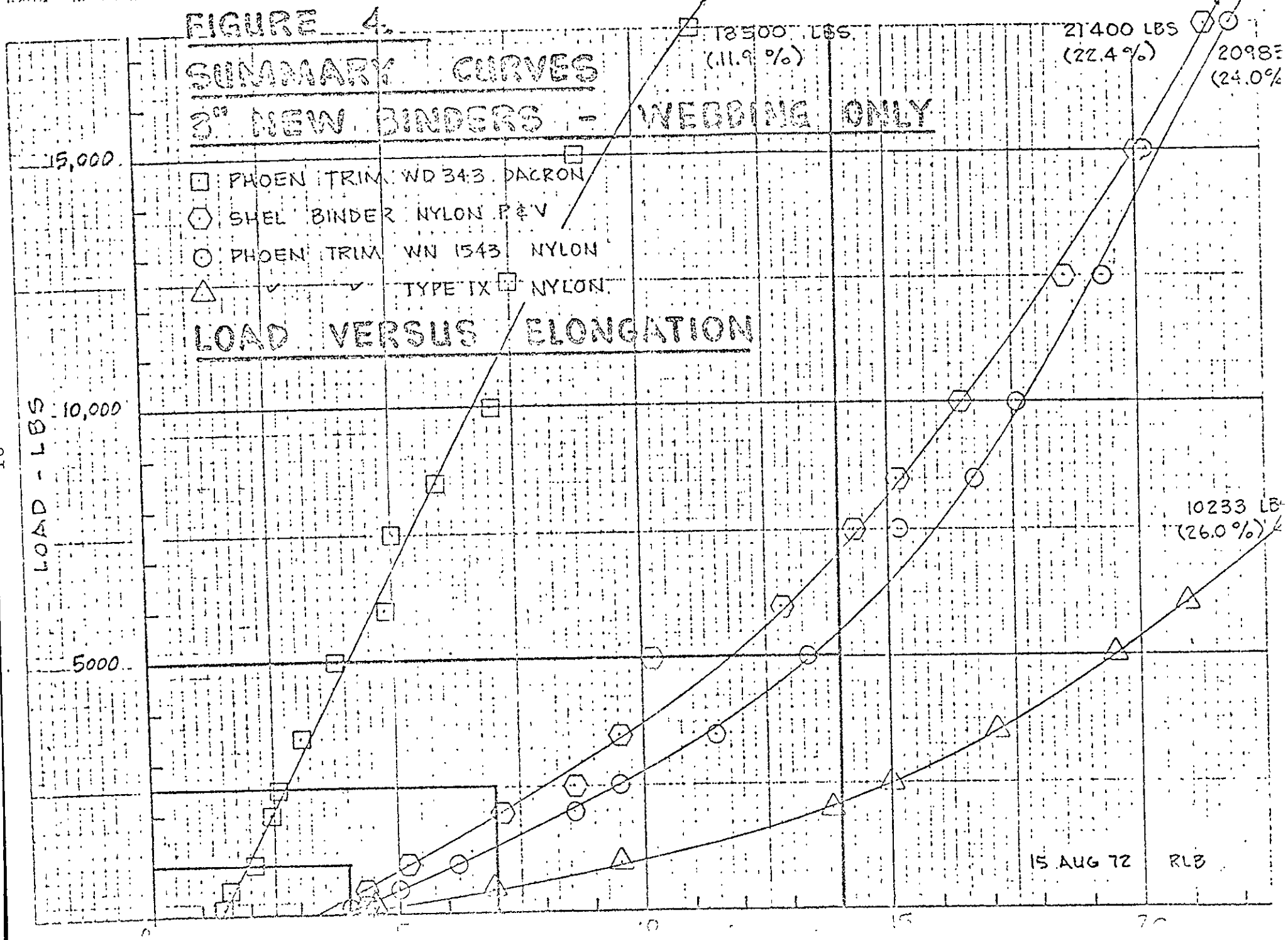

ClibPDF - www.fastio.com

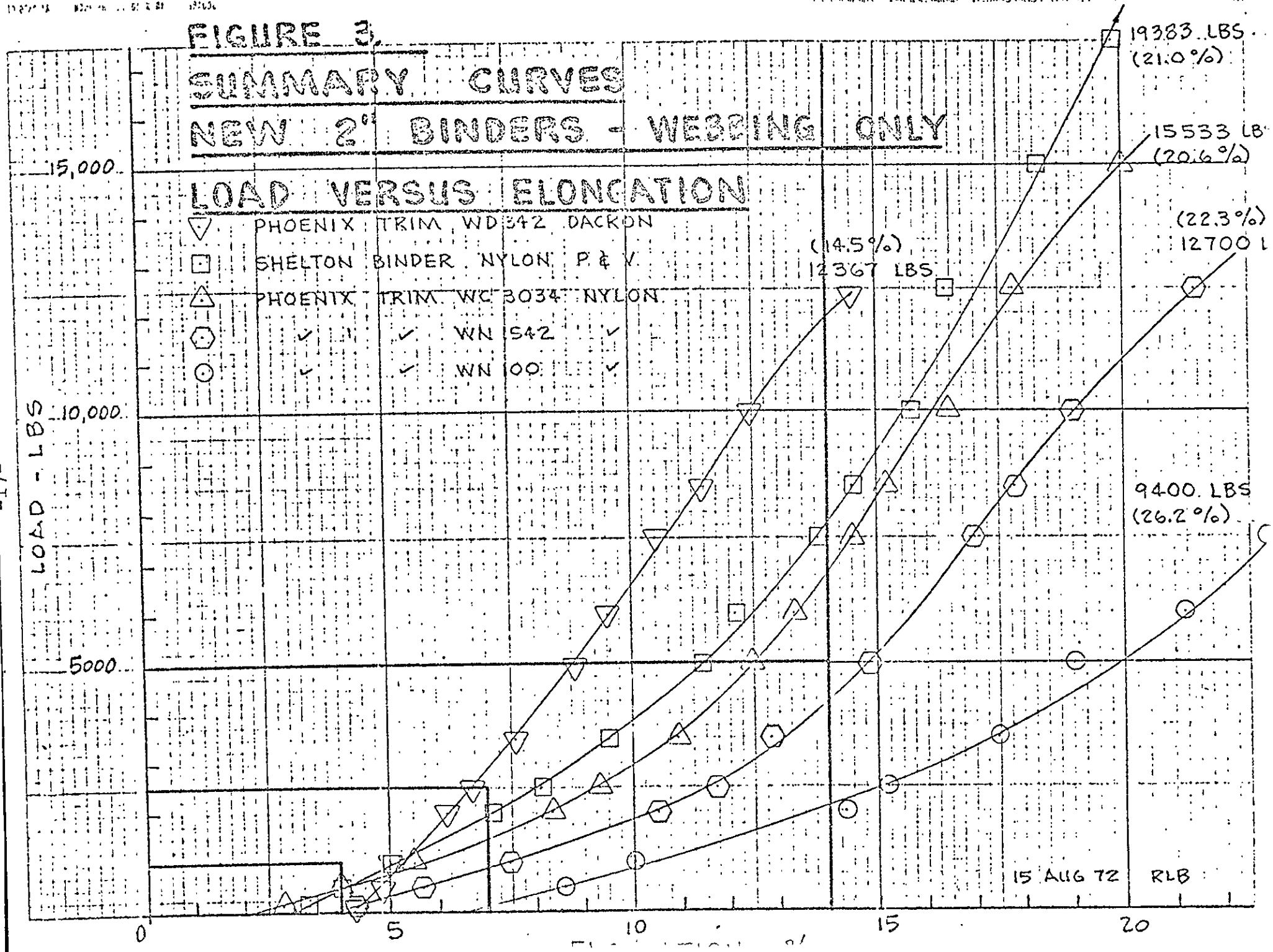
FIGURE 3.
SUMMARY CURVES
NEW 2" BINDERS - WEBBING ONLY
LOAD VERSUS ELONGATION
PHOENIX TRIM WD 342 DACRON
SHELTON BINDER NYLON P & V
PHOENIX TRIM WC 3034 NYLON
WN 542
WN 100
LOAD - LBS
15,000
10,000
5000
0
5
10
15
20
19383 LBS
(21.0%)
15533 LB
(20.6%)
(22.3%)
12700 L
(14.5%)
12367 LBS
9400 LBS
(26.2%)
15 AUG 72
RLB

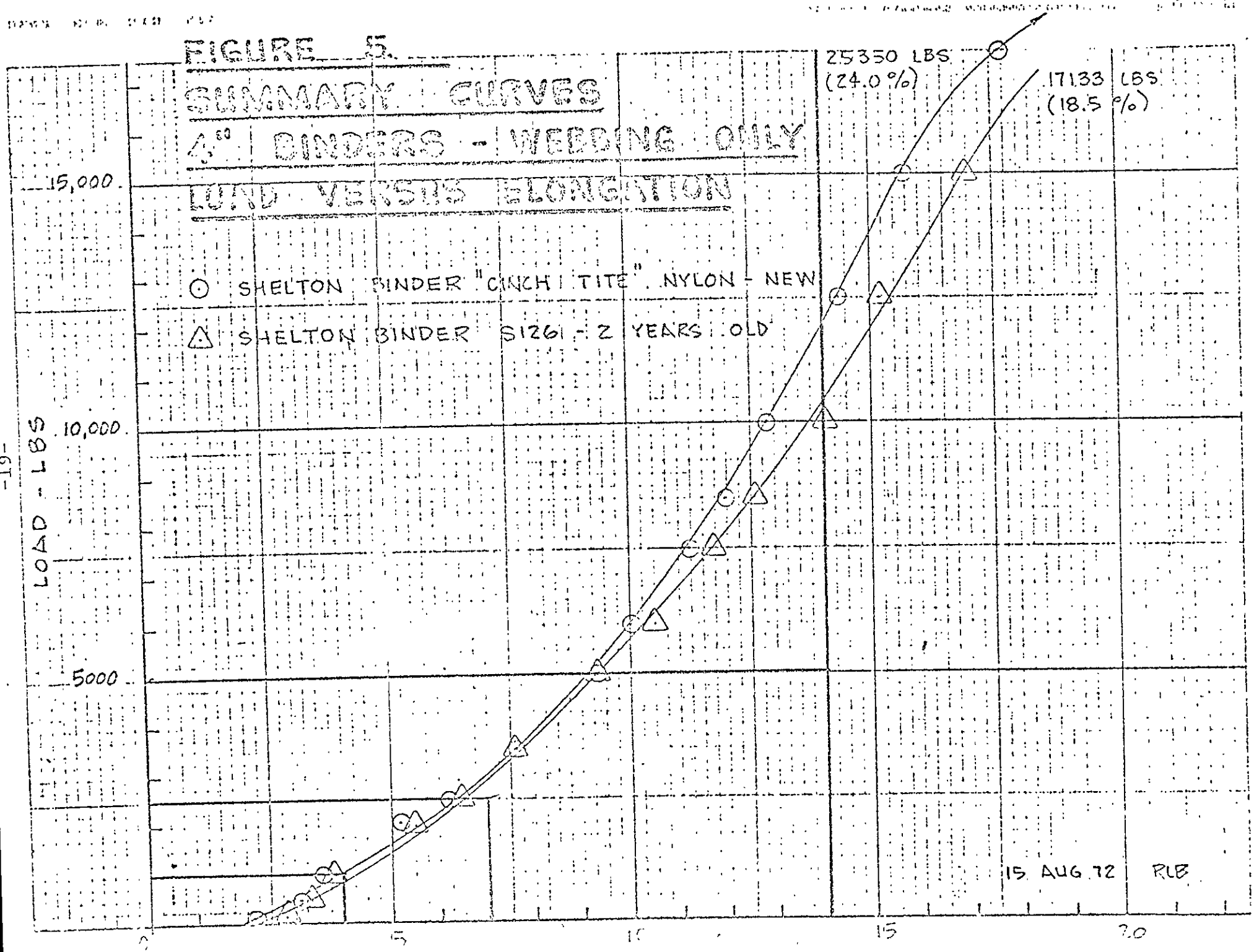

ClibPDF - www.fastio.com

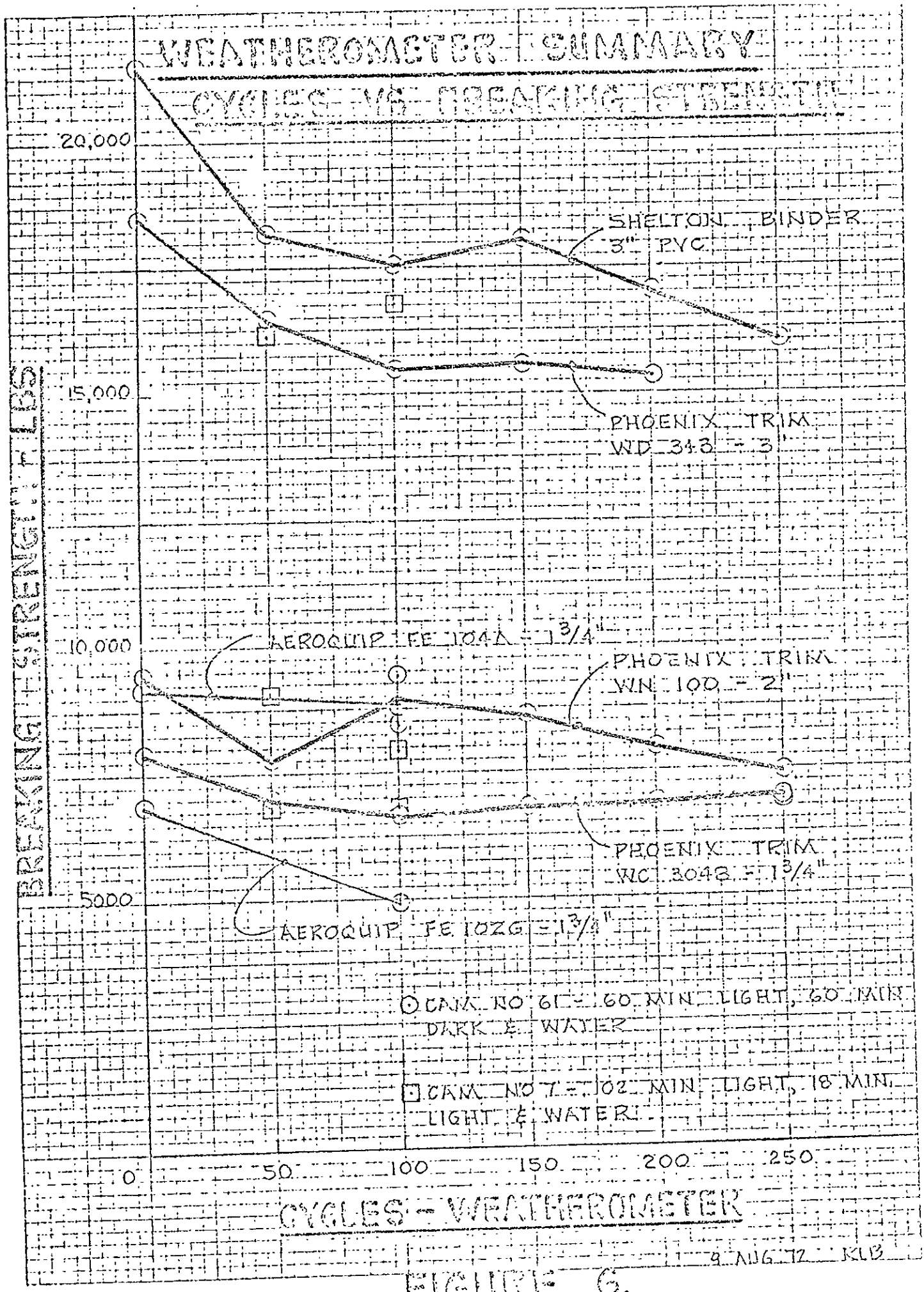

FIGURE 6.

ClibPDF - www.fastio.com

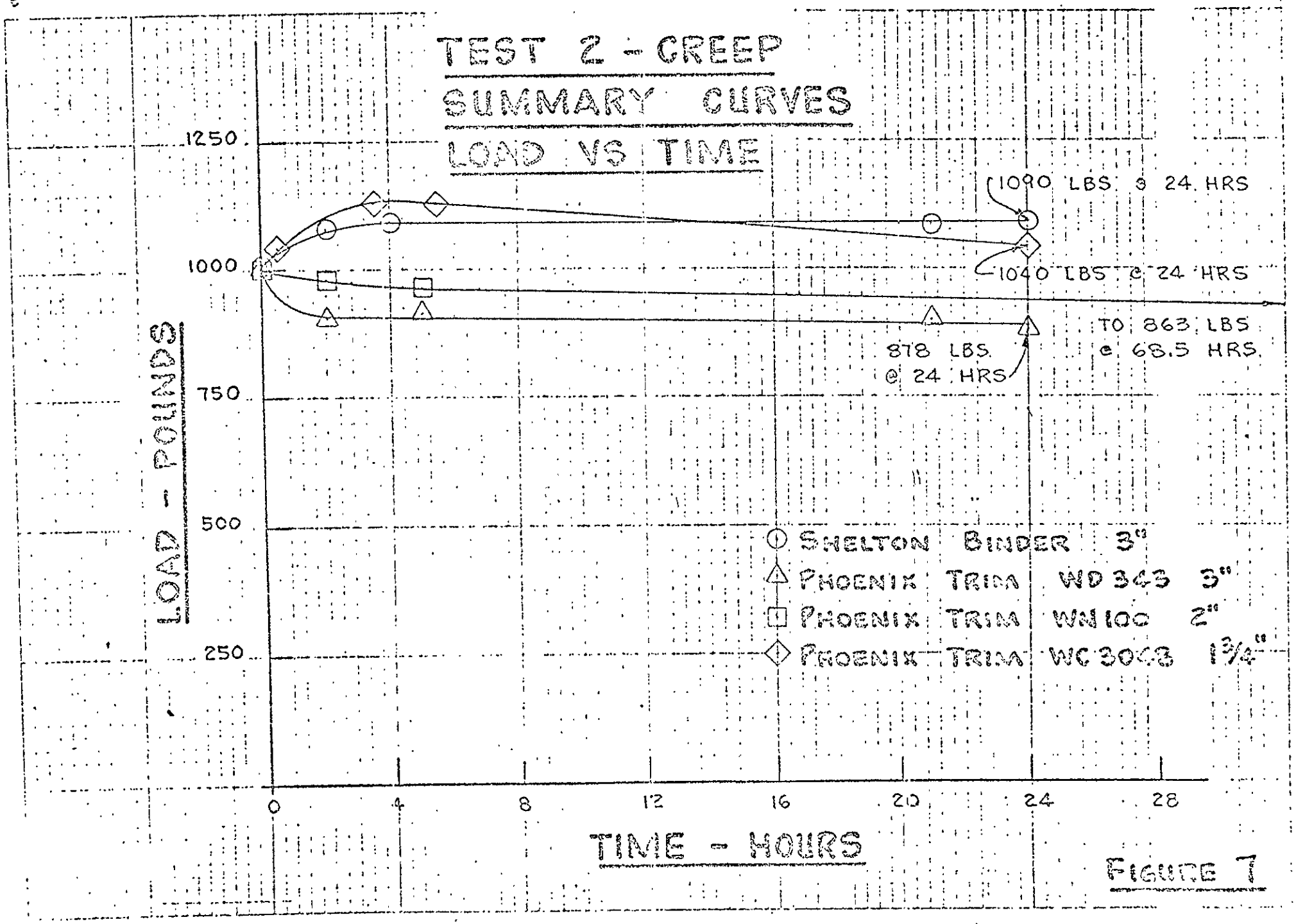

FIGURE 7

ClibPDF - www.fastio.com

PROPOSED TEST PROCEDURES -- LOAD BINDER ASSEMBLIES

The following proposed test procedures are recommendations based on experience gained from this project:

Load Binder Assemblies

This test is proposed to determine ultimate breaking strength and elongation at failure for new, used or treated load binder systems complete with hardware:

Procedure:

1. Obtain three samples of each system to be tested.

2. Using appropriate fixtures in the jaws of the testing machine, secure the ends of the sample to the fixtures.

3. Load sample to 100 pounds. Measure and record distance between ends of sample or between fixtures. Define this as initial length, L_o.

4. Load the sample to failure using a jaw separation rate of 1.5 ± 0.5 inches per minute. Failure is considered to be that instant when a sudden physical fracture or tear occurs in any component in the system combined with a sudden decrease in load in the system.

5. When failure occurs, immediately stop the jaws from separating. Measure and record the distance between the same points used in Step 2. Define this as length at failure, L_f.

6. Record the maximum load the sample sustained prior to failure. Define this load as the ultimate breaking strength.

7. Repeat Steps 2-6 for remaining samples.

8. Compute the average ultimate breaking strength, P_a, for the three samples using the formula:

$$P_a = \frac{P_1 + P_2 + P_3}{3}$$

Where P_1, P_2, and P_3 = ultimate breaking strengths of samples 1, 2, and 3 respectively.

9. Compute the average initial length, L_{oa}, using the formula:

$$L_{oa} = \frac{L_{01} + L_{02} + L_{03}}{3}$$

Where L_{01}, L_{02}, and L_{03} = Initial lengths L_o for samples 1, 2, and 3 respectively.

ClibPDF - www.fastio.com

10. Compute average final length, L_{fa}, using the formula:

$$L_{fa} = \frac{L_{f1} + L_{f2} + L_{f3}}{3}$$

Where L_{f1}, L_{f2}, and L_{f3} = Final lengths L_f for samples 1, 2, and 3 respectively.

11. Compute average elongation at failure, e, using the formula:

$$e = \frac{(L_{fa} - L_{oa})\ 100}{L_{oa}}$$

Where L_{fa} and L_{oa} are defined above.

SAFETY NOTE: To avoid injury to test personnel from flying debris at failure, it is strongly recommended that a shield or enclosure be placed near or around the test specimen during testing.

ClibPDF - www.fastio.com

ClibPDF - www.fastio.com

PROPOSED TEST PROCEDURES -- SYNTHETIC WEBBING

This test is proposed to determine the ultimate breaking strength and elongation of new, used, and treated synthetic webbing.

The test device consists of two split-drum-type jaws approximately 3-3/4 inches in diameter and 4 inches wide conforming to Mil-W-4088. The jaws are attached to a suitable universal testing machine.

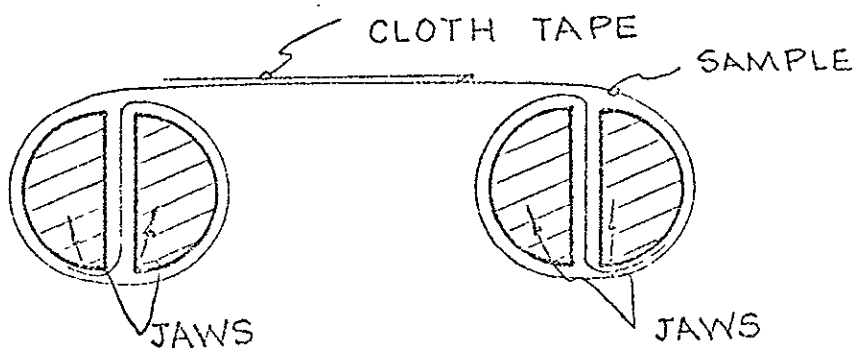

Procedure

1. Obtain approximately 12.0 feet of each webbing type to be used.

2. Cut the 12.0 foot sample into three test specimens, each approximately 42 inches long.

3. Secure a specimen in the jaws as shown in Figure 1, and load the specimen to 100 pounds preload.

4. Mark gage lines on the specimen 5.0 inches apart and attach a cloth measuring tape.

5. Load the specimen to a value corresponding to the manufacturer's load rating at a jaw saparation rate of 1.5 ± 0.5 inches per minute.

6. As soon as the load reaches the manufacturer's load rating, stop the jaws from separating and lock in place. Measure and record the distance between the gage lines.

7. Decrease the load to 100 pounds and lock jaws once load is obtained. Measure and record the distance between the gage lines.

8. Load the specimen to failure at a jaw separation rate of 1.5 ± 0.5 inches per minute. As the load increases, measure and record the distance between the gage lines at load levels of 500, 1000, 2000, 3000, 4000, 5000, 6000, 7500, 10000, 12500, 15000, and at failure if possible. Failure is considered to be that instant when tearing occurs in the specimen combined with a sudden decrease in load in the specimen.

ClibPDF - www.fastio.com

9. Repeat Steps 3-9 for the remaining specimens.

10. Compute elongation using the formula:

$$e = \frac{(L_i - L_o)}{L_o} 100$$

Where e = percent elongation
L_i = distance between gage lines on a sample at any load.
L_o = 5.0 inches or the distance between gage lines on a sample at the initial 100 pound preload.

SAFETY NOTE: To avoid injury to test personnel from flying debris at failure, it is strongly recommended that a shield or enclosure be placed near or around the test specimens during testing.

ClibPDF - www.fastio.com

ClibPDF - www.fastio.com