'86
1

LIBRARY COPY
Materials & Research Dept.

52-08

ClibPDF - www.fastio.com

ClibPDF - www.fastio.com

FNH/10/52
4186

THE RELATION BETWEEN QUALITY OF MATERIALS AND QUALITY OF HIGHWAYS

LIBRARY COPY
Materials & Research Dept.

By

F. N. Hveem
Materials and Research Engineer
California Division of Highways
Sacramento, California

October 1952

ClibPDF - www.fastio.com

ClibPDF - www.fastio.com

October 1952

THE RELATION BETWEEN QUALITY OF MATERIALS AND QUALITY OF HIGHWAYS

F. N. Hveem
Materials and Research Engineer
California Division of Highways

A general discussion of the factors which influence the performance and quality of highway surfaces and airfield pavements must necessarily touch upon a great many different phases--the location, design features, climatic conditions, type of traffic to be carried, type of construction, quality of workmanship, funds available, et cetera. All these factors may have a bearing upon the performance but one consideration will usually outweigh all others. If the materials used are entirely satisfactory and are properly combined, most of the other factors will have little or no effect upon the performance.

If a Bible were written especially for engineers, it might well start with an opening phrase in the first chapter somewhat as follows:

> IN THE BEGINNING, THERE IS THE SOIL AND THE SURFACE OF THE EARTH AND ALL THE MATERIALS THEREOF.

There are few activities of the civil engineer that do not require a consideration of the soil and the materials of the earth's surface. These materials have been used by builders and engineers since the dawn of civilization and the use of clays for pottery is even more ancient. Studies of the soil or of the earth's surface have been divided into different specialties; for

ClibPDF - www.fastio.com

example, geologists and the students of soils for agricultural purposes. Civil engineers make a great deal of use of geological information and have adopted many of the mineralogical classifications. They have also drawn heavily upon the efforts of the soils scientists working in the agricultural field. It is necessary to recognize, however, that while much of value can be secured from workers in other fields; nevertheless, the classifications developed by geologists are not always in accord with the engineering properties of materials, and the interests of the agricultural expert and his methods of soil classification are also different from those of the engineer. As a result, civil engineers and especially highway engineers must develop their own methods to determine the behavior of soils for engineering purposes.

While many text books have been written in the general field of soil mechanics, many such treatises rely heavily upon the mathematical approach which necessarily assumes that soil masses are highly uniform and therefore represent an isotropic mass. Most practical engineers who build highways are very much aware however that the ideal soil of the mathematician is rarely encountered in actual highway roadbeds and whether he likes it or not he must construct the pavement over the soils that exist and with the granular materials that are economically available. It appears that the materials of the earth were created to serve a variety of purposes and all types are not suitable for the specialized needs of the highway engineer.

ClibPDF - www.fastio.com

In laying the ground work for such a construction, it is obvious that if the engineer or anyone else is to plan a structure with assurance that it will carry the loads and perform as was intended, he must know a great deal about the qualities of the materials and how they will act or perform during the years in which the structure is expected to last.

For the purposes of this discussion, a highway or airfield pavement and its supporting base are considered to be a structure, and the upper surface of any pavement is subjected to a variety of destructive influences. Among these are the thrusts due to the tractive effort of vehicles either in accelerating or decelerating which may be described as a combination of abrasive action and rolling friction. The surface of the pavement must also withstand the effects of wind, variation in temperature and moisture, in addition to supporting the weight of the vehicle. The material beneath the pavement is also subjected to several influences among which are the effects of pressures resulting from vertical loading and the effects of moisture. It may be argued that low temperatures are also damaging to subgrades but the effect is an indirect one as there is no reason to think that any damage would result from freezing or thawing in the absence of water. Of all the factors or influences which affect the supporting power and load carrying capacity of soils, moisture is by far the most important variable. In the absence of water, virtually all soil materials whether crushed stone, sand, loam or adobe will support any vehicle load that can be carried on pneumatic tires and if the soils beneath highway pavements could be prevented from becoming wet, soil mechanics would have little meaning and would not be

ClibPDF - www.fastio.com

of much concern to the highway engineer. Therefore, so far as practical applications are concerned, the very title "Soil Mechanics" is misleading as the term makes no reference to the most important and influential element; namely, water. When engineers mix as little as 5 per cent of liquid asphalt with mineral aggregate, the resulting combination is called an asphaltic mixture. If 15 per cent of Portland cement and water is combined with sand and gravel, the combination is called Portland cement concrete but when faced with the necessity of predicting the behavior and supporting power of soil which may contain as much as 25 per cent of water, the engineer still tends to delude himself by thinking that he is concerned only with "soil" mechanics.

As stated before, it was not many years ago when engineers generally paid very little attention to differences in soil types. Most railroad and highway engineers learned long ago that classified excavation is usually a source of trouble and controversy between the contractor and the engineer and many states including the California Division of Highways do not classify excavation materials. In other words, the contractor is paid on the basis of his bid price whether he is moving loose soil or solid rock. In spite of these simplifications, engineers began to realize some 25 years ago that materials encountered along the highway routes were not always giving equally satisfactory performance and one of the first factors to receive consideration was compaction. The California Division of Highways were pioneers in setting up requirements to control the compaction of soils during construction.

ClibPDF - www.fastio.com

It did not take long to discover that in order to secure the maximum efficiency with field compaction equipment, careful control of the moisture content was necessary. However, with the passage of time and increasing study of the problem, it was evident that thorough compaction alone was not enough to guarantee satisfactory support in all types of soils and it became apparent that there was need for some laboratory test procedure that would evaluate the capacity of the soil to sustain loads when in its most vulnerable condition of density and moisture content. Dating from Coulomb's time, (1736-1806) most theoretical discussions on soil mechanics recognize that the entire structural strength of soils rests upon two distinct properties; namely, internal friction and cohesion. The stability of slopes and embankments, the pressures against retaining walls, and the ability to sustain vertical loads, all depend upon a combination of these properties; namely, friction between the rock or soil particles and any cohesive forces which may exist. The laws governing the frictional resistance between solid particles are probably very complex and it is to be doubted whether the nature of this phenomenon is clearly understood, even today, but for practical purposes variations in frictional resistance may be well enough defined in the terms used by Amontons who was one of the first to investigate frictional phenomena. Amontons' law states that the resistance to sliding between adjacent particles in contact varies with the nature of the surfaces, directly with the pressure which holds the surfaces together and is independent of the speed and

ClibPDF - www.fastio.com

the apparent area in contact. The common definition of cohesion as used in soil mechanics texts does not correspond to the dictionary definition and it is generally stated that the cohesive resistance in soils is that part of the resistance which does not vary with the pressure. This is a rather negative definition but agrees with the observed behavior of viscous liquids as the internal friction of liquids is virtually independent of the pressure and the resistance developed by a film of viscous material between two solid bodies varies directly with the area and with the speed of action but is largely independent of the pressure.

While the civil engineer considers that the term "soil" includes all materials of the earth's mantle including gravel and sands, as well as the silts and loams, it is true that virtually all such materials contain a greater or less percentage of extremely fine particles having the special properties of plasticity and mobility that are characteristic of the clay minerals. If there is a complete absence of the clay fraction, the material finer than a No. 4 sieve is to all intent and purposes a sand even though some of the particles are very small and of course most clays possess properties that are not solely attributable to small particle size alone. It is not the purpose of this paper to attempt any discussion on the intimate shape and composition of the clay particles. From

ClibPDF - www.fastio.com

the standpoint of the highway engineer who is attempting to evaluate the behavior of soils as an engineering material, it is sufficient to recognize that when combined with sufficient water most clays are very effective lubricants and when a sufficient quantity of clay is intermixed with the coarser granular portion of a soil, lubrication will develop whenever enough water is added. As the ability of soils to resist deformation depends very largely on the internal friction, wet clay has the effect of reducing or canceling out the frictional resistance. It may also be pointed out that the so-called cohesive resistance is almost entirely due to the clay fractions and therefore clean sands are non-cohesive. Again we must note the important part played by water as finely ground dry clay particles exhibit no cohesive properties. If water is added to a dry soil, the cohesive resistance will normally increase with the addition of moisture and in most cases the frictional resistance will not be greatly impaired until a certain amount of moisture is added. Beyond this point, the friction will diminish but the cohesive resistance may continue to increase up to some point of higher moisture content, after which both values will diminish as the soil approaches a completely fluid state.

As the wet clay fraction reduces the internal resistance by lubrication but may increase the resistance by improving the cohesion, it is necessary to determine something of the relative importance of these two properties. As this paper is

ClibPDF - www.fastio.com

alleged to be on the practical side, I will not resort to theoretical discussion but simply point out that both field and laboratory experience demonstrates that of the two basic properties resistance due to friction is of the greatest magnitude and therefore the most important when dealing with typical soils or granular materials. Beds of clean sand even when wet have long been known to furnish excellent foundation support provided a reasonable thickness of surfacing material is placed above. Crushed stone or gravels with no measurable cohesion are excellent for base course construction and are able to withstand virtually any vehicle load if covered with relatively thin surfaces having the requisite tensile strength. On the other hand, plastic soils or asphaltic mixtures having high cohesive values but little internal friction are rarely adequate to sustain vehicle loads. It is realized, of course, that if the cohesive or tensile strength could be made sufficiently high, internal friction would not be necessary. Metals are typical substances having little or no internal friction and where the resistance values are almost entirely due to the cohesive or tensile strength. However, natural soils containing appreciable amounts of water are not capable of developing such high cohesive values and therefore the internal friction is the most important property. This conclusion is in accord with the observation that an excessive amount of clay is detrimental and soils or gravel containing high percentages of clay invariably become unstable and lack supporting power when wet.

ClibPDF - www.fastio.com

Having recognized the generally adverse influence of clays it is pertinent to inquire whether there are differences in performance due to the type of clay as it is well-known that there are numerous types and classes among the clay minerals. While specialists and experts in clay technology must perforce recognize many of the variants and peculiarities of clays, the highway engineer has gone a long way if he recognizes three main groups; namely, kaolinite, illite and montmorillonite. Again he is only concerned with their physical properties and it is well-known that most clays of the montmorillonite class possess a very high affinity for water typically showing considerable expansion or swelling and when wet are very effective lubricants. Kaolinite is at the other end of the scale having in general a much lower capacity for water and retains a greater internal resistance due to friction than is the case with bentonite, for example. Illite clays appear to be somewhat intermediate. In addition to the particle shape or structural differences that are characteristic of each of these types of clays, it is also evident that the physical properties may be markedly affected by small additions of water soluble salts or other organic or inorganic compounds. A knowledge of these behavior patterns and the effects of such elements on the fluidity and plasticity of clays is, of course, one of the essential branches of clay technology and requires specialized knowledge which the average highway engineer or even a well equipped highway materials department can hardly hope to command.

ClibPDF - www.fastio.com

The engineer's interest, however, is primarily involved in the question of the over-all effect of the particular clay when the soil becomes wet and the primary question is the effect on the structural stability which, as stated above, really involves the possible reduction in internal friction.

In order to measure the ability of soils and granular materials to sustain loads, many tests have been devised, one of which is used in the laboratory of the California Division of Highways. This testing procedure makes it possible to prepare soil specimens by first introducing sufficient water to fill the void space, compacting to a state of density comparable to that developed in most highway bases and basement soil layers, and then to measure the resistance to deformation. The instrument has been given the name of "stabilometer." Basically, it is a form of plastometer and the test reflects primarily the internal friction or degree of lubrication with cohesive resistance playing a minor part. When being tested in this instrument, a compacted sample is subjected to a vertical load which may be varied at will but for highway purposes is typically 160 psi. The instrument makes it possible to measure the lateral pressure transmitted by the specimen, Fig. 3. Figure 2 is a chart showing characteristic curves illustrating loss in stability or internal resistance of a crushed sandy gravel due to the addition of increments of plastic clay. This test is used as a basis for calculating the supporting value of the soil and by use of suitable formulas it is possible to compute the thickness of cover courses of bases and pavement which

ClibPDF - www.fastio.com

will be necessary to support vehicle loads of a given magnitude and number of repetitions. These test procedures have been reported in considerable detail elsewhere and will not be discussed further here. The stabilometer test and the elaborate compaction equipment required to produce specimens that are characteristic of soils in place in the roadbed mean that this test procedure is virtually restricted to a fairly large, well equipped laboratory.

It is essential however, that the engineers in charge of construction should have some ready and convenient means for detecting the presence of excessive amounts of adverse clay or fine materials. In view of the fact that the lubricating effect of clay or of any other material is dependent upon the volume of or the thickness of film between the particles, the most fundamental relationship depends upon the effective volume of clay that exists in each soil. In order to speed up the testing operation by avoiding the need for weighing the sample and drying out in an oven, a test has been developed called the "Sand Equivalent Determination." The test is applied to a sample of granular base material passing a No. 4 sieve and the relationship between the quantity of clay present and the amount of coarser sand particles in the soil is developed on a volume basis and the test results indicate whether the volume of "sand" is either high or low - hence, the name "Sand Equivalent."

ClibPDF - www.fastio.com

Essentially, the test is performed by shaking a sample of the fine aggregate vigorously in a transparent cylinder containing a special solution (Fig. 5) and noting the relative volumes of sand and of the partially sedimented clay after standing for 20 minutes. The entire operation can be carried through in less than 40 minutes. In order to speed up the sedimentation of the fine clays or colloidal particles, a flocculating agent was required and a solution of calcium chloride was selected on account of its relatively low cost, stability and non-irritating properties. As illustrated in Fig. 4, a small amount of bentonite is in lubricating effect equal to a much greater weight of kaolinite and the strength of the $CaCl_2$ solution was adjusted to the point where 5 percent of bentonite would give an S.E. reading approximately equal to that produced by 21 per cent of kaolinite after a sedimentation period of 20 minutes. This relationship appeared to be best established by using a .025N $CaCl_2$ solution. However, the strength of the solution is not critical for most natural soils therefore, a working solution of .05N has been adopted and will be used until accumulated experience may warrant a change. After some experience with the calcium chloride solution, it was found that the addition of a small amount of glycerin produced a stabilizing effect and test results were more readily reproducible when made on carefully quartered samples. Finally, it was noted that the calcium-chloride-glycerin solution was not sterile and certain moulds tended to grow. In order to sterilize the solution, formaldehyde was added.

ClibPDF - www.fastio.com

When the Sand Equivalent Test was first developed, it was hoped that it would furnish a good indication of the over-all resistance value of the soil. A correlation does exist but it is not sharply defined throughout the scale. The reasons therefore are not difficult to understand if it is recognized that the ability of a mass of soil or granular material passing a No. 4 sieve to resist deformation will depend upon the following factors:

Summary of Factors Affecting Resistance Value of Soil

1. The amount of lubricant mixed with the sand fraction; i.e., asphalt, clay+water, etc.

2. The effectiveness or efficiency of the lubricating fraction. (Wet bentonite is a better lubricant than kaolinite, for example.)

3. The degree of roughness or irregularity of the sand grains or rock particles.

4. The amount of void space in the sand fraction of the soil.

5. The amount of intermingled coarse rock retained on a No. 4 sieve.

We readily perceive that of these five variables the Sand Equivalent Determination is primarily an indication of No. 1. It attempts to compensate for No. 2 by means of the type of solution used. It cannot indicate the variation caused by Item 3, and as presently performed does not make allowance for No. 4 although it seems possible that means for making this correction may be worked out. Allowance for the effects of No. 5 need to be made if the coarse aggregate exceeds 25 or

ClibPDF - www.fastio.com

30 per cent of the total. Therefore, in order to evaluate the combined effect of all factors, some test such as the stabilometer is necessary. However, experience has shown that one of the principal variables is the amount of clay present and it may readily be determined that when the Sand Equivalent value is greater than 30 the clay fraction is not sufficiently large to have much influence on the resistance value of an untreated soil.

Application and Tentative S.E. Limits

Very small amounts of clay may be detrimental to the performance of bituminous mixtures, especially when the clay exists as a coating on the surfaces of the sand grains. As the Sand Equivalent Determination furnishes a ready means for detecting the presence of such fine materials, a tentative scale of values has been set up to permit rapid testing and quick determination in the field.

A comparison of sand equivalent test values to other test results indicates that the majority of soils showing high expansion under soaking may be identified by means of the sand equivalent. It has been the general practice to consider that any soils showing an expansion of greater than 5 per cent when tested in the California Bearing Ratio Procedure will be unsuitable for placing in the upper levels of the road bed. It appears that the same class of soils could be identified and segregated by stipulating that any soils having a sand equivalent less than 10 should not be placed in the upper layers as they are also likely to develop excessive expansion when saturated.

ClibPDF - www.fastio.com

In conclusion, it may be stated that the suitability of soils for engineering purposes depends largely upon their ability to remain in place and to support whatever loads may be placed upon them either by a permanent engineering structure or by transient vehicle loads. A study of the properties which distinguish the more satisfactory from the less satisfactory soils indicates that in the majority of cases clays are detrimental to stability and it is apparent that wet clay has the effect of a lubricant in diminishing the natural resistance due to friction that would otherwise exist. It is necessary that the civil engineer responsible for construction of any form of earth work should be informed not only concerning the quantity of clay minerals that are present but also should know something of their nature and their potential influence on the engineering properties of the soil.

ClibPDF - www.fastio.com

ClibPDF - www.fastio.com

SUPPLEMENTAL PAPERS

on

PAVEMENT DESIGN AND MATERIALS CONTROL

1. "Progress Report on California Experience with Cement Treated Bases," (Joint Author with Mr. T. E. Stanton and James L. Beatty), Highway Research Board, November 1943.

2. "The Factors Underlying the Rational Design of Pavements," (Joint Author with Robert M. Carmany), Highway Research Board, Vol. 28, 1948 Proceedings.

ClibPDF - www.fastio.com

ClibPDF - www.fastio.com

ClibPDF - www.fastio.com

FACTORS AFFECTING THE DESIGN OF PAVEMENTS

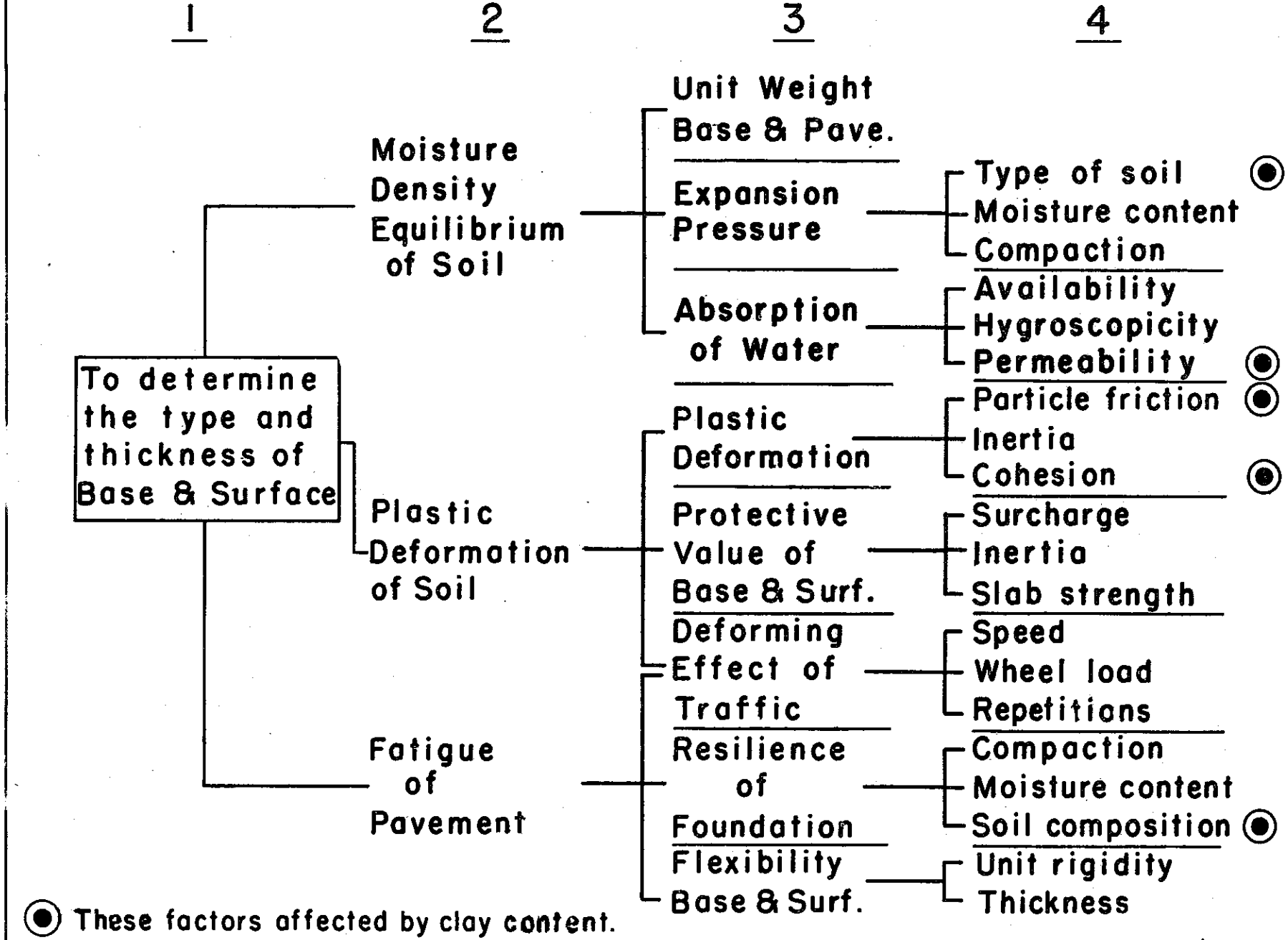

Fig. 1

ClibPDF - www.fastio.com

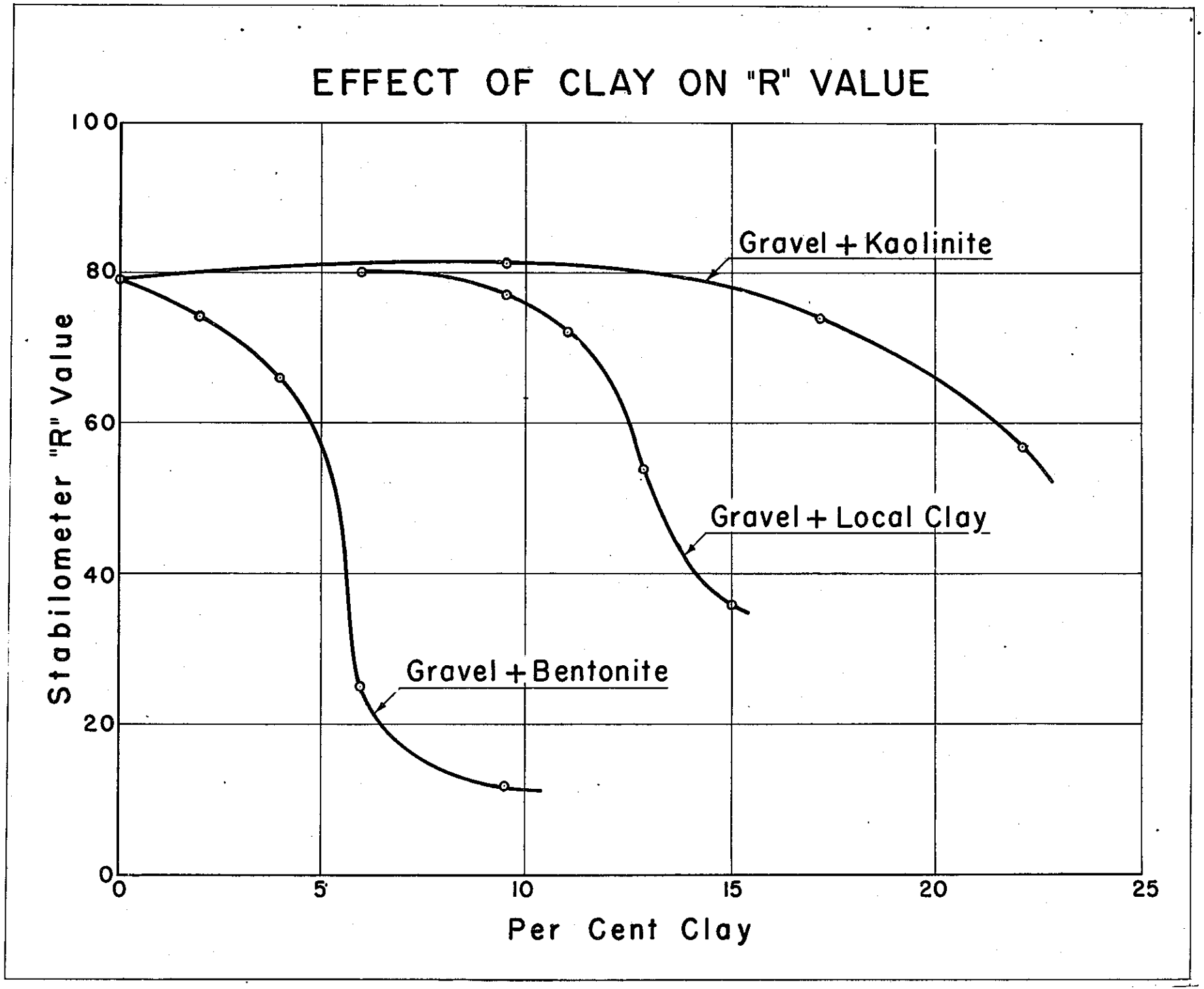

Fig. 2

ClibPDF - www.fastio.com

ClibPDF - www.fastio.com

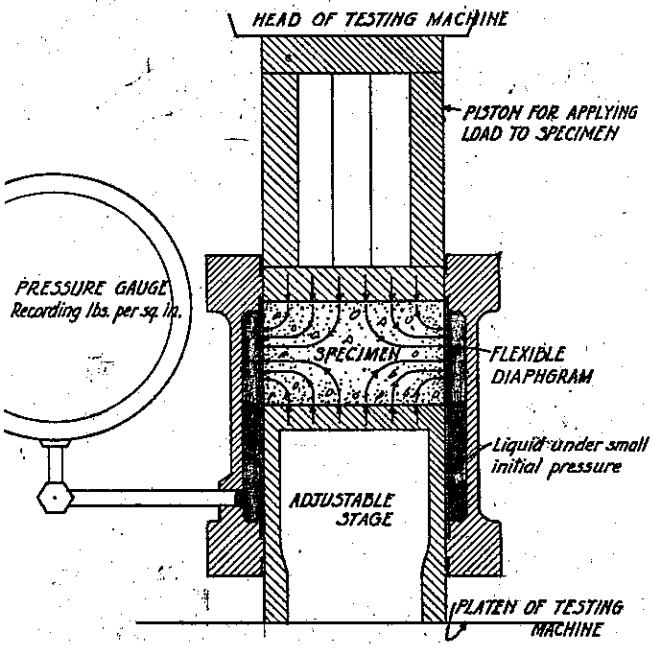

Fig. 3

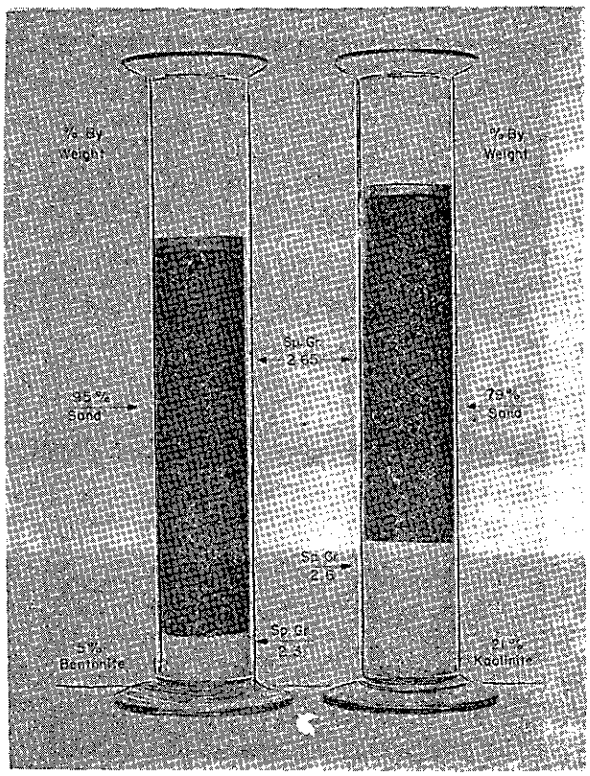

Fig. 4.

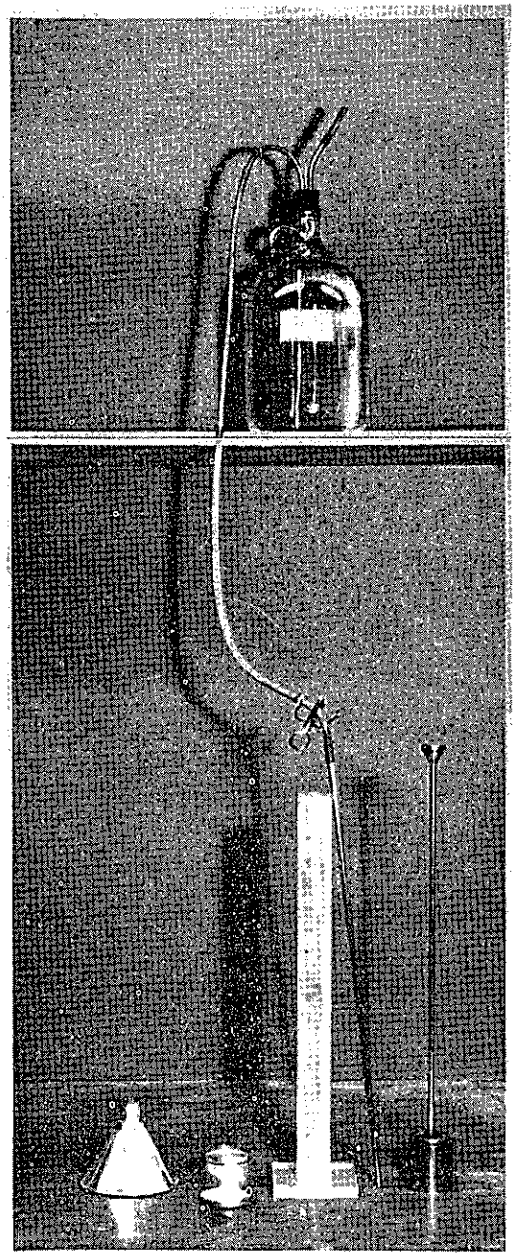

Fig. 5.

ClibPDF - www.fastio.com

ClibPDF - www.fastio.com