California Department of Transportation
Division of Engineering Services
Materials Engineering and Testing Services
Corrosion and Structural Concrete
Field Investigation Branch

CORROSION GUIDELINES

Version 2.1

JANUARY 2015

NOTICE

The contents of this document reflect the views of Materials Engineering and Testing Services which is responsible for the facts and the accuracy of the guidelines presented herein. The contents do not necessarily reflect the official views or policies of the State of California or the Federal Highway Administration. **These guidelines do not constitute a standard, specification, or regulation.**

Neither the State of California nor the United States Government endorses products or manufacturers. Trade or manufacturers' names appear herein only because they are considered essential to the object of this document.

Comments on these Corrosion Guidelines should be directed to:

Leo Martinez, Senior
Corrosion and Structural Concrete Field Investigation Branch

via e-mail

Leo_Martinez@.dot.ca.gov

or

via US Mail

California Department of Transportation
Materials Engineering and Testing Services
Corrosion and Structural Concrete Field Investigation Branch
5900 Folsom Blvd., Sacramento, CA 95819

TABLE OF CONTENTS

1. INTRODUCTION 1

2. THE DEPARTMENT'S FUNCTIONAL GROUPS ASSISTING WITH CORROSION INVESTIGATIONS 1

3. REQUIREMENTS FOR CONSULTANTS PROVIDING CORROSION ASSESSMENTS OF DEPARTMENT PROJECTS 2

4. CORROSION BASICS 5
   4.1 Corrosion Terms 5
   4.2 Electrochemical Equations 6
   4.3 Electromotive Force Series and Galvanic Series 7

5. PRINCIPLES OF CATHODIC PROTECTION 11
   5.1 Galvanic CP Systems 11
   5.2 Impressed Current CP Systems 11
   5.3 Vector Galvashield XP Anodes 12

6. CORROSIVE ENVIRONMENT 13
   6.1 The Department's Definition of a Corrosive Environment 13
   6.2 Survey of Site Conditions 14

7. FOUNDATIONS 15
   7.1 Soil Sampling for Foundations and Geotechnical Investigations 15
   7.2 Water Sampling for Foundations and Geotechnical Investigations 18
   7.3 Bridge Structure Scour Assessment Related to Corrosion 19
   7.4 Reporting Corrosion Test Results for Foundations 19
   7.5 Steel Piles 19
   7.6 Cast-In-Drilled-Hole (CIDH) Pile Anomalies 21

8. MSE STRUCTURES 22
   8.1 Corrosion Requirements for MSE Structure Backfill 22
   8.2 Corrosion Sampling and Testing for MSE Structures 23
   8.3 Reporting Corrosion Test Results for MSE Structures 23

9. SOIL AND ROCK ANCHOR SYSTEMS 23
   9.1 Tieback Anchors 23
   9.2 Tiedown Anchors 24
   9.3 Soil Nails 24
   9.4 Rockfall Mitigation 24
   9.5 Gabions 24

10. CULVERTS 25
10.1 Corrosion Sampling and Testing for Culverts 25
10.2 Culvert Material 26
10.3 Cement Slurry, Controlled Low Strength Material (CLSM) or Concrete Backfill for Culverts 27

11. CORROSION AND STRUCTURAL CONCRETE FIELD INVESTIGATION LAB SERVICES 28
11.1 Testing Services 28
11.2 Field Investigation Team (FIT) 28
11.3 Reporting Corrosion Test Results 28

12. CORROSION MITIGATION MEASURES 29
12.1 Corrosion Mitigation Measures for Reinforced Concrete 29
12.2 Epoxy-Coated Reinforcing Steel 30
12.3 Dampproofing and Waterproofing 31

14. MISCELLANEOUS TOPICS 31
14.1 Stray Current Mitigation 31
14.2 Dust Palliatives 32
14.3 Miscellaneous Metals 32

15. REFERENCES 34

1. INTRODUCTION

These guidelines outline the corrosion evaluation and recommendation aspects of site investigations for California Department of Transportation (Department) projects. The guidelines list the requirements for field investigations related to corrosion, including requirements for sampling of soil and water, required corrosion testing, reporting of results, requests for assistance, and corrosion mitigation measures (design alternatives).

This document is intended for use by Department staff and consultants, working on the Department's projects, performing field investigations related to corrosion, and/or providing design recommendations that include corrosion mitigation measures. This document supersedes the following report: ***Corrosion Guidelines Version 2.0 November 2012***. Additional Department guidelines such as the ***Standard Specifications***, ***Bridge Memo-To-Designers*** and others can be found in the References section of this report.

2. THE DEPARTMENT'S FUNCTIONAL GROUPS ASSISTING WITH CORROSION INVESTIGATIONS

This section outlines the roles and responsibilities of Department staff performing corrosion assessments of project sites. The District Materials Branches are responsible for preparing a Materials Report (MR) for all projects that involve pavement structural section recommendations or pavement studies, culverts or other drainage features, corrosion studies, materials, or disposal sites. This policy is defined in Chapter 600 of the ***Highway Design Manual*** *(HDM)* (see References). The District Materials Branches collect soil and water samples for corrosion testing. They perform minimum resistivity and pH testing, but send samples to the Materials Engineering and Testing Services (METS), Corrosion and Structural Concrete Field Investigation Branch (CSCFI) for chloride and sulfate testing, if necessary. Documentation of the corrosion investigation, sampling, corrosion testing, and corrosion recommendations for culverts and drainage structures are the responsibility of the District Materials Branch. The CSCFI Branch can provide report assistance or review, if necessary.

Geotechnical Services (GS) is responsible for preparing reports for Structure Design to support design of structure foundations, special design retaining walls and buildings. GS also prepares reports for the District Project Engineer to support design of highways, standard plan structures, earthwork and related items not designed by Structure Design. Geotechnical investigations are required for projects involving cut slopes, embankments, earthwork, landslide remediation, retaining walls, sound walls, groundwater studies, erosion control features, sub-excavation, and any other studies involving engineering geology. As part of the geotechnical investigation, GS is responsible for conducting a corrosion investigation of the structure site. The corrosion investigation should include sampling of soil and water for corrosion testing, summarizing corrosion test data, and a discussion of the corrosivity of the project site.

Generally, corrosion mitigation measures for structures are selected by Division of Engineering Services (DES) design staff, using appropriate measures listed in Department guidelines. Additional assistance regarding selecting appropriate corrosion mitigation measures may be obtained from the CSCFI Branch if needed. Geotechnical Services staff does not routinely provide corrosion mitigation measures in their reports; however, they should be aware of corrosion mitigation requirements when recommending pile/foundation alternatives.

3. REQUIREMENTS FOR CONSULTANTS PROVIDING CORROSION ASSESSMENTS OF DEPARTMENT PROJECTS

This section outlines the roles and responsibilities of consultants providing corrosion investigation services and corrosion mitigation recommendations for Department projects. In addition, this section can be used by Department staff providing consultant oversight of corrosion investigation services and mitigation recommendations prepared by consultants.

The flowchart at the end of this section outlines the roles and responsibilities of the various Department functional groups assisting consultants performing corrosion investigations, and lists the responsibilities of the consultant.

Foundation investigations are required for all structures (including bridges, tunnels, retaining walls, MSE walls, sound walls, tie-back walls, overhead signs, maintenance stations, pumping plants/stations, toll plazas, etc.). All foundation investigations require a corrosion investigation and evaluation. Preliminary and final Foundation Reports prepared by consultants should include all available corrosion data for the site and a brief discussion of the data. If corrosion data is not available, or is insufficient to provide conclusive information regarding the corrosivity of the site, then additional corrosion sampling and testing is required per Department guidelines during the field investigation phases.

Consultants should follow the recommendations for preparing reports as discussed in the following documents (see References): ***Caltrans Geotechnical Manual***, ***Guidelines for Preparing Geotechnical Design Reports Version 1.3*** (December 2006) and the ***Foundation Report Preparation for Bridges*** document (December 2009).

Consultants under contract to provide design related recommendations should include corrosion recommendations consistent with Department guidelines. Corrosion design recommendations should be based on the worse case test results from the site in accordance with Department guidelines. Sufficient information regarding the number and location of soil borings, sampling, and testing should be included to allow a thorough review of any corrosion recommendations by Department staff.

Corrosion testing of soil (both surface and subsurface soil samples) and water samples shall be performed in accordance with the applicable ***California Test*** *(CT*) (see References). If procedures and equipment other than those specified in the applicable *CT* are used, those

variations must be approved, documented, and presented with the corrosion test results. References to the test methods used for corrosion testing must be included on each page that presents the corrosion test results and analysis. Some variations (like a one-point resistivity test instead of a minimum resistivity test) will not be allowed. If in doubt about whether alternative test methods are acceptable or not, contact the Corrosion and Structural Concrete Field Investigation Branch of METS before starting any testing.

Minimum resistivity and pH tests are outlined in ***CT 643*** (see References). Test procedures for determining water-soluble sulfate and chloride contents are outlined in ***CT 417*** and ***CT 422*** (see References). Consultants should follow the guidelines presented in this document for performing corrosion assessments of project sites when performing work for the Department.

The Corrosion and Structural Concrete Field Investigation Branch of METS is available to review all corrosion investigations conducted by consultants, should additional assistance be needed. Upon request from the functional groups performing oversight, the Corrosion and Structural Concrete Field Investigation Branch will comment on the corrosion aspects of Materials Reports, Geotechnical Design Reports, Foundation Reports, and Preliminary Reports prepared by consultants.

Department/Consultants Interaction Flowchart

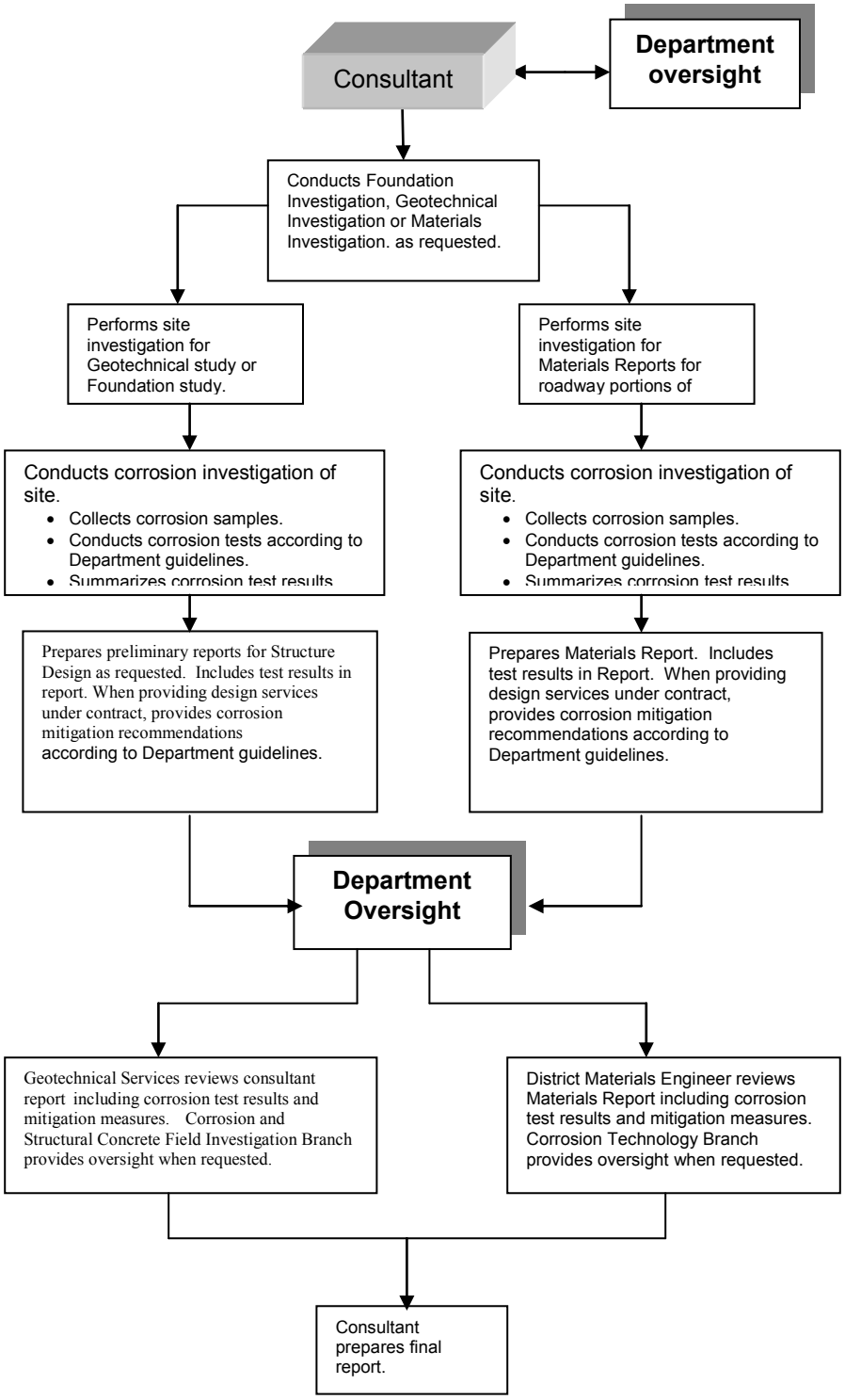

4. CORROSION BASICS

Corrosion is the deterioration of a metal through a reaction with its environment. Typically, corrosion involves contact of the metal with moisture and air (oxygen). The deterioration that takes place during the corrosion process is the basic tendency of the metal to revert to its natural state prior to it being developed from its primary ore material. The most common example of corrosion is the rusting of steel into iron oxide, its primary ore as found in the earth.

The corrosion process of metals is an electrochemical process involving a transfer of electrons from the metal's surface to ions in the environment (the electrolyte).

Corrosion is often described in electrical terms as an electrical circuit consisting of four key components. These include an anode (where corrosion or chemical oxidation reactions are taking place), a cathode (where chemical reduction reactions are taking place), an electrolyte (solutions or conductive media providing the supply of chemicals needed to sustain the cathodic reactions at or near the metal surface), and a metallic path.

4.1 CORROSION TERMS

The anode is where corrosion or chemical oxidation reactions are taking place. These are the locations on the metal surface where electrical current is being passed by chemical means from the metals surface to ions, elements or compounds in the electrolyte. The metal is losing electrons and combining with other elements in the environments by means of an oxidation reaction.

The cathode is where chemical reduction reactions are taking place. These are the locations on the metal surface where electrical current is being passed by chemical means from ions, elements or compounds in the electrolyte to the surface of the metal. This chemical reaction is a reduction reaction.

ANODE	CATHODE
An electrode where oxidation reactions (corrosion) occur.	An electrode where reduction occur.

The anode and cathode in a corrosion process may be on two different metals connected together forming a bimetallic couple, or as they may be on the same piece of metal. An area on a metal surface (or with two dissimilar metals, each respective metal) either becomes an anode or a cathode depending on the electrical potential of one area relative to the other. The electrical potential difference is the electromotive force of the cell and is the voltage difference between the anode and cathode of the cell. In any electrochemical cell, the area that is more negative in potential will undergo corrosion if coupled to the more positive area. The corrosion process is initiated by differences in the natural potential between the two dissimilar metals (bimetallic couple); metallurgical variations in the state

at different points on the surface a single metal; or localized variations in the environment such as variations in moisture content or oxygen concentration

The electrolyte is the material in contact with both the anode and the cathode that allows ions to migrate between the two electrodes. This allows ionic current flow to occur between the anode and the cathode. The electrolyte includes the source of atoms, elements, or compounds required for ionic current flow to and from the metal electrodes. The electrolyte is the environment that the metal is in contact with including whatever salts and liquids are present (e.g., soil for a buried metal or concrete for reinforcing steel).

The metallic path completes the electrical circuit and allows electrons to flow from the anode to the cathode in the electrochemical cell.

ELECTROLYTE	METALLIC PATH
Soil and/or liquid or other conductive media adjacent to and in contact with the anode and the cathode that allows ions to migrate.	Any conductor that allows electrons to flow.

4.2 ELECTROCHEMICAL EQUATIONS

The corrosion process can be described through a series of anodic and cathodic reaction equations (electrochemical equations) depending on the metal and ionic species involved. At the anode, iron is oxidized to the ferrous state, releasing electrons.

$$M_o \longrightarrow M+^{n+} + ne-$$
$$\text{(metal)} \longrightarrow \text{(ion)} + \text{(electron)}$$

Where M_o represents a metal atom such as iron in a metallic structure; the arrow indicates the direction that reaction is occurring; the symbol M+ represents a metal ion; and n+ along with ne- indicates the number of electrons involved in the chemical reaction.
A common example is that of iron corrosion:

$$Fe \longrightarrow Fe^{++} + 2e-$$
$$\text{(iron)} \longrightarrow \text{(iron ion)} + \text{(2 electrons)}$$

Iron gives up two electrons, which pass through the metal from an anodic site to a cathodic site where they are consumed in a cathodic (reduction) reaction. The cathodic reaction is in the form:

$$R^+ + e^- \longrightarrow R^o$$
$$\text{(ion)} + \text{(electron)} \longrightarrow \text{(reduced species)}$$

Where R^+ represents a positive ion in solution, e^- indicates the number of electrons gained, the arrow indicates the direction that reaction is occurring; and R^o is the reduced atom produced as a result of the chemical reaction.

Two common examples of cathodic reactions are the reduction of hydrogen and oxygen:

$$2H^+ + 2e^- \longrightarrow H_2$$
(hydrogen ions in solution) + (electron) ⟶ (reduced species)

$$O_2 + 2H_2O + 4e \longrightarrow 4OH$$
(oxygen ions in solution) + (water) + (electrons) ⟶ (reduced species)

4.3 ELECTROMOTIVE FORCE SERIES AND GALVANIC SERIES

From the previous discussion, it can be seen that there is a transfer of electrons that occurs during the corrosion process. The example shown was that of steel in the presence of hydrogen and oxygen (both present as dissolved species in water). Similar electrochemical reactions can occur regardless of the conductive contact medium (soil, water, concrete, etc).

The standard that has been established to provide a reference scale of electrical potential values for metals and non-metals is known as the electromotive force (EMF) series or REDOX potential series.

To measure potentials (or voltages) for comparison of REDOX reactions, the reference used is a Standard Hydrogen Electrode (SHE). This electrode is a constructed by bubbling gaseous hydrogen at 1 atmosphere of pressure over a piece of pure platinum in a solution of one normal H^+ ions.

The redox reaction is therefore: $2H^+ + 2e^- = H_{2g}$

Figure 4.3-1 shows a schematic of the SHE.

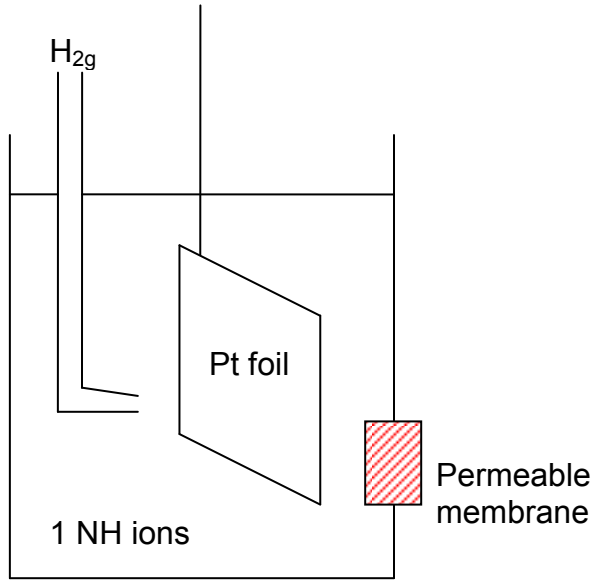

Figure 4.3-1: Schematic of standard hydrogen electrode (SHE). Hydrogen gas is bubbled into a beaker over platinum at a pressure of 1 atmosphere.

The potential for the SHE reaction by definition is 0.0 V. It is a complete REDOX reaction and will maintain a standard, constant voltage unless the standard conditions are deviated. The oxidation (anodic reaction) and the reduction (cathodic) reactions are given below:

$$H_2 \longrightarrow 2H^+ + 2e^-$$
$$2H^+ + 2e^- \longrightarrow H_2$$

Note that no electron removal is allowed and the hydrogen ion strength must is maintained.

Coupling different metals to the SHE allows their electrical potentials to be measured on a voltmeter using the SHE as a standard "zero" reference point. Figure 4.3-2 shows how a SHE is coupled to a metal using a high resistance voltmeter to measure the voltage of the metal. The high resistance of the voltmeter ensures that no current flows between the two REOX cells and so no corrosion or deposition actually occurs. The REDOX reaction being measured must also be at standard condition. This series provides the *thermodynamic* probability that a pure metal under standard conditions will either ionize by an anodic reaction, or plate out in a cathodic reaction. Table 4.3-1 is a partial list of the established EMF series developed in a manner described using a SHE and various metals at standard conditions.

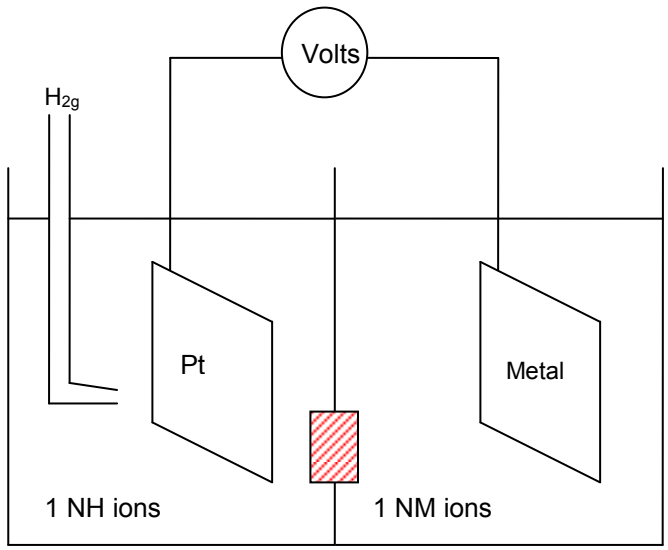

Figure 4.3-2: Cell for determination of EMF series or Redox potentials.

Reaction	Potential at equilibrium (volts).
$Au = Au^{3+} + 3e^-$	+1.498
$O_2 + 4H^+ + 4e^- = 2H_2O$	+1.229
$Pt = Pt^{2+} + 2e^-$	+1.2
$O_2 + 2H_2O + 4e^- = 4(OH^-)$	+0.401
$2H^+ + 2e^- = H_2$	0.0
$Fe = Fe^{2+} + 2e^-$	-0.440
$Cr = Cr^{3+} + 3e^-$	-0.744
$Zn = Zn^{2+} + 2e^-$	-0.763
$Al = Al^{3+} + 3e^-$	-1.662

Table 4.3-1: Cell for determination of EMF series or Redox potentials.

The more negative the potential measured in the EMF series, the more likely the material is to oxidize in an anodic half cell reaction. Conversely, the more positive the potential in the series, the less likely the material is to oxidize. For example, gold (Au) is termed very noble as it has a high positive EMF value, while zinc (Zn) is very anodic as it has a relatively high negative value on the EMF scale. Connecting gold to zinc will induce an anodic reaction of the zinc to produce electrons:

$$Zn \longrightarrow Zn^{2+} + 2e^-$$

Concurrently, the cathodic half-cell reaction will be favored in the half-cell with the more positive potential and gold ions will be reduced to gold by

$$Au^{3+} + 3e^{-} \longrightarrow Au$$

The zinc will have corroded, as weight loss will occur. This process is essentially galvanic corrosion.

Another useful series is the galvanic series. The galvanic series is the electrical potential of a metal or alloy in a particular electrolytic solution (usually seawater). It is useful in determining how two or more metals will behave if electrically connected together in an ionically conductive environment. The electrical potential of each metal is measured as before against a standard. However, the standard may not always be the SHE. Other "reference electrodes" may be used. A reference electrode is simply an electrode (electrical conductor) that has a stable and well know electrical potential. The high stability of the electrode potential is usually reached by employing a redox system with constant (buffered or saturated) concentrations of each participant of the redox reactions. Examples of reference electrodes are the copper/copper sulfate ($Cu/CuSO_4$) reference electrode, saturated calomel electrode (SCE) reference, and the silver/silver chloride (Ag/AgCl) reference electrode.

An example of a galvanic series is shown in Table 4.3-2.

Metal or Alloy	Potential in Volts (Versus Ag/AgCL Ref)
Magnesium	-1.64
Aluminum Anode (Proprietary)	-1.53
Zinc (MIL-A-18001G)	-1.03
Cast Iron	-0.61
Carbon Steel (A1010)	-0.61
304 Stainless Steel (Active)	-0.53
Silver	-0.13
304 Stainless Steel (Passive)	-0.08
316 Stainless Steel (Passive)	-0.06
Graphite	+0.25
Platinum	+0.26

Table 4.3-2: Galvanic series in seawater versus a silver/silver chloride (Ag/AgCl) reference cell.

In terms of corrosion, when looking at metals in an electrical potential series such as an electrical motive force series or a galvanic series, when two metals are coupled together, the more negative metal (the anodic metal) will corrode relative to the more cathodic (noble) metal.

5. PRINCIPLES OF CATHODIC PROTECTION

Cathodic protection (CP) is an electrochemical technique used to control corrosion. CP provides a method to minimize deterioration of a metal (or structure) due to corrosion that is occurring as a result of contact with the surrounding environment (electrolyte).

Degradation is minimized by reversing the natural electrical current flow that is occurring during the corrosion process.

CP is achieved by connecting an external anode to the metal to be protected and allowing a direct current (DC) electric current to pass from that anode to the metal (the cathode) sufficient enough to keep all areas of the metal from corroding.

When electrical current can flow from the external anode in sufficient quantity to protect all areas of the metal simply by the natural difference in electrical potential between the anode and cathode, the cathodic protection system is referred to as a galvanic CP system. When an external DC power source is needed to increase the electrical current flow to the cathode to a level that sufficiently protects all areas of the metal in question, the system is called an impressed current CP system.

5.1 GALVANIC CP SYSTEMS

Galvanic CP systems use reactive metals or alloys as anodes that are connected to the metal being protected. Active metals commonly used include zinc, aluminum, and magnesium alloys. Alloys may include combinations of these metals along with slight additions of minor elements to improve the alloys stability characteristics. With Galvanic CP systems, the sacrificial anode material is connected directly to the structure (metal) that requires corrosion protection. Coupling the two materials (the anode and the metal of the structure) will cause a shift in electrical potential of the structure metal since the structure metal is now the artificial “cathode” in the anode-cathode circuit and the bimetallic couple will try and reach an equilibrium potential. Contact to the reinforcement is made either by metallizing directly over the exposed reinforcement or by attaching a stud to the reinforcement when patching is needed for structural reasons. The zinc is then metallized over the exposed stud.

5.2 IMPRESSED CURRENT CP SYSTEMS

Impressed current CP systems typically consist of a power source to drive the protective CP current, and an anode material that is relatively inert or that has a low dissolution rate. Impressed current CP systems are installed such that that the anode does not directly contact the metal or structure being protected. The anode is connected to the positive side of the DC power supply, and the metal being protected is connected to the negative side of the power supply. The “circuit” is completed through the electrolytic path of soil or concrete that separates the anode and cathode. This resistive path is needed so that a direct electrical short circuit does not occur between the negative and positive leads of the power supply. Figure 5.2-1 shows a schematic of an impressed current CP system for reinforced

concrete. The battery symbol represents the DC power source. The positive side of the source is connected to a titanium anode mesh. The negative side of the source is connected to reinforcement in concrete. The concrete has been omitted from the view.

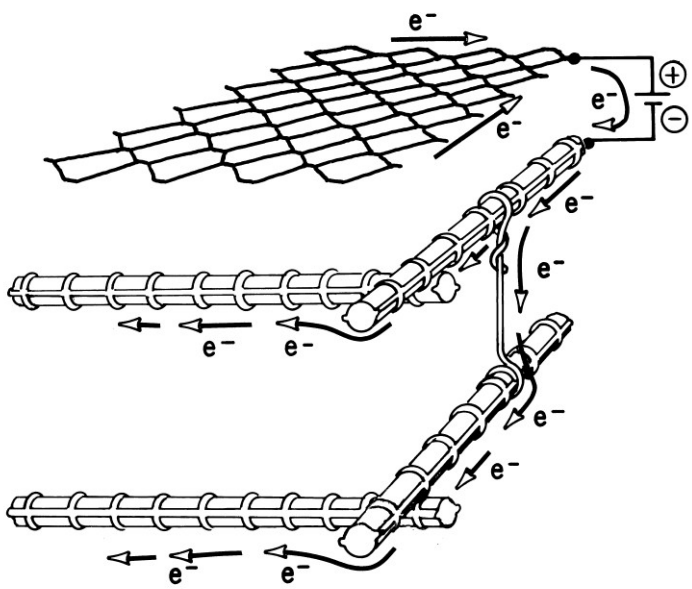

Figure 5.2-1: Schematic of an impressed current CP system for reinforced concrete. The battery symbol represents the DC power source. The positive side of the source is connected to a titanium anode mesh. The negative side of the source is connected to reinforcement in concrete. The concrete has been omitted from the view.

5.3 VECTOR GALVASHIELD XP ANODES

Caltrans Construction has made use of a galvanic CP products designed by Vector Corrosion Technologies for bridge expansions and repairs where new concrete is being placed in contact with older concrete. The product (Galvashield ® XP) acts as embedded galvanic anode and is comprised of zinc encased in a highly alkaline cementitious shell. Galvashield XP was developed to mitigate corrosion of reinforcing steel in concrete at the interface between new/repaired mortar/concrete and existing chloride contaminated concrete.

Historically, the area adjacent to patched concrete areas continues to experience accelerated corrosion due to the development of corrosion cells at the new to old concrete interface. Areas of concrete with residual chloride become anodic relative to the patched regions and corrosion of the steel around the patch circumference is accelerated. The Galvashield tied

directly to the steel near the interface of the old and new concrete provides passive cathodic protection since it is comprised of a sacrificial zinc core.

The anodes are tied directly to the reinforcing steel. The number of anodes are selected based on knowing the steel density ratio (surface area of steel/surface area of concrete) within the zone requiring protection, and recommended maximum spacing requirements for particular Galvashield products provided by Vector Corrosion Technologies. Recommended spacing requirements are based on research indicating that a current density requirement between 0.05 and 0.2 microamps per cm^2 of steel surface area is needed to provide some corrosion protection benefit in concrete. Examples of design related calculations for selecting the number of anodes and anode spacing may be obtained from Vector Corrosion Technologies website at: (http://www.vector-corrosion.com/downloads.html).

6. CORROSIVE ENVIRONMENT

The Department has adopted the American Association of State Highway Transportation Officials (AASHTO) ***Load and Resistance Factor Design (LRFD) Bridge Specification*** requirement for a 75-year structure design life. However, culverts and drainage facilities typically require a 50-year maintenance free design life. Site specific corrosion investigations are needed to determine the corrosivity of a site and to provide appropriate corrosion mitigation measures to obtain the desired design lives. Factors that contribute to corrosion include the presence of soluble salts, soil and water resistivity, soil and water pH, and the presence of oxygen.

6.1 The Department's Definition of a Corrosive Environment

Corrosion of metals is an electrochemical process involving oxidation (anodic) and reduction (cathodic) reactions on metal surfaces. For metals in soil or water, corrosion is typically a result of contact with soluble salts found in the soil or water. This process requires moisture to form solutions of the soluble salts. Factors that influence the rate and amount of corrosion include the amount of moisture, the conductivity of the solution (soil and/or water), the hydrogen activity of the solution (pH), and the oxygen concentration (aeration). Other factors such as soil organic content, soil porosity, and texture indirectly affect corrosion of metals in soil by affecting the factors listed above.

The Department defines a corrosive area in terms of the resistivity, pH, and soluble salt content of the soil and/or water. Since resistivity serves as an indicator parameter for the possible presence of soluble salts, it is **not included as a parameter** to define a corrosive area for **structures**. MSE walls (see Section 8 of these Guidelines) **include the resistivity as a parameter** to define a corrosive environment. In general, the higher the resistivity, the lower the rate for corrosion. A minimum resistivity value for soil and/or water less than 1000 ohm-cm indicates the presence of high quantities of soluble salts and a higher propensity for corrosion. Soil and water that have a minimum resistivity equal to or less than 1,000 ohm-cm are required to be tested by a certified lab for chlorides and sulfates per

CT 417 and CT 422. Soil and water that have a resistivity greater than 1000 ohm-cm and less than 1100 ohm-cm are typically tested by the Chemical Testing Branch of METS for chlorides and sulfates as an additional precaution, even though it is not a requirement. The Department uses the terms "corrosive" and "not corrosive" to describe the environment.

For structural elements, the Department considers a site to be corrosive if one or more of the following conditions exist for the representative soil and/or water samples taken at the site:

> **Chloride concentration is 500 ppm or greater, sulfate concentration is 2000 ppm or greater, or the pH is 5.5 or less.**

For structural elements, appropriate corrosion mitigation measures for “corrosive” conditions are selected depending on the service environment, amount of aggressive ion salts (chloride or sulfate), pH level and the desired service life of the structure.

Chloride ions from saltwater, soil, or from de-icing salts can lead to corrosion of steel reinforcement in concrete and steel structures by breaking down the normally present protective layer of oxides (passive layer) present on the steel surface.

Similar to chlorides, sulfate ions may also lead to accelerated corrosion of steel reinforcement. In addition to causing metals to corrode, high amounts of sulfates are deleterious to concrete. Sulfates react with lime in the concrete to form expansive products that cause the concrete to soften and crack. Cracked concrete is more susceptible to attack by water and other aggressive ions that may accelerate the corrosion process. Sulfides in the soil can be an indicator of sulfate reducing bacteria which can lower the soil pH to more acidic, increasing the corrosion rates.

The presence of high acidity, pH of 5.5 or less, in soil or water is also considered a corrosive condition. Soil or water with a pH of 5.5 or less can react with the lime in concrete to form soluble reaction products that can easily leach out of the concrete. The result is a more porous, weaker concrete. Acidic conditions often cause discoloration of the concrete surface. A yellowish or rust color distributed over the concrete surface should be investigated.

6.2 Survey of Site Conditions

In general, corrosion investigations, whether performed by Department staff or by consultants, should include a survey of the following site conditions:

- Extent of corrosive soils and water at the site.
- Presence of on-site fill material.
- A general description of the condition of any existing structures in the immediate vicinity that may impact the proposed structures. For example, do existing culverts

show signs of corrosion or deterioration such as cracked concrete, exposed reinforcement, rust stains, failed coatings or excessive wear due to abrasion?

- Proximity of the structure or proposed structure to salt or brackish water.
- Proximity of the structure or proposed structure to marine atmosphere.
- Presence of abrasive water or high water flow (needed for scour consideration of structure foundations and abrasive water flows in culverts).
- Proximity to natural features such as mineral springs or local geothermal activity.
- Exposure of the structure or proposed structure to deicing salts (Climate Area III environments, where salt is applied to roadways and structures).
- Presence of existing utilities such as light rail, or cathodic protection systems on pipelines, structures and underground storage tanks which may impose stray electrical current in the soil.

7. FOUNDATIONS

Factors that contribute to corrosion include the presence of soluble salts, soil and water resistivity, soil and water pH, and the presence of oxygen. Site specific corrosion investigations are needed to perform a complete assessment of corrosivity. See Section 6.1 of these Guidelines for a definition of a corrosive environment.

For rehabilitation and realignment projects, the Area Bridge Maintenance Engineers' (ABME) records as well as those maintained by the Corrosion and Structural Concrete Field Investigation Branch should be reviewed for information. This information is essential to identify appropriate mitigation measures.

For new alignments or when no maintenance records exist, a thorough review of all site investigations, sampling programs, and corrosion test results will be required to identify appropriate materials for potential corrosion mitigation.

7.1 Soil Sampling for Foundations and Geotechnical Investigations

Sampling a site for corrosion assessment requires that samples of soil and water are obtained from both surface and subsurface material to ensure representation of all soil strata at the site within the limits of the proposed construction. The sampling provides the Designer with the information required to adjust the design of the foundation to protect if necessary against a corrosive environment. The sampling provides Construction with the necessary corrosion information to determine if mitigation by the Contractor is required after evaluating pile tests for anomalies. Representative sampling for corrosion testing should identify the **worst** case condition that exists in the materials to be encountered or used. Composite samples, those samples that combine several smaller samples to provide a single sample representing a much larger interval are discouraged.

The following designated procedures shall be used for **corrosion sampling** during every structure foundation investigation conducted in the field. At least one boring for corrosion

purposes should be located as close as possible to each of the proposed deep foundation[1] elements for larger bridge structures. It is recommended that a minimum of two borings should be sufficient for smaller bridges that have may have only 1 Bent; unless there is a major change in the subsurface material within the proposed substructure area. Sampling should be representative of the depth of the proposed foundation. For example, if a bore hole is drilled to a depth of 70 foot for a proposed CIDH, then a single sample at a depth of 18-20 ft. might not be sufficient to be considered representative for the entire borehole. The sampling guidelines listed below should be considered as the **minimum** number taken and that the more sampling conducted, the more accurate the results.

- The frequency of sampling for corrosivity should be on par with the number of samples taken for other soil tests (such as plasticity) required for the design of deep foundations.
- Typically, 5-7 lbs of soil material is sufficient for corrosion testing.
- If fill material or disturbed soils are present at the site, samples should be taken of the fill material as well as the native soil. Disturbed soils are typically more corrosive than non-disturbed soils. The samples taken should be representative of the depth of the fill material or disturbed soils.
- One sample at near surface between 1 and 5 ft.
- Below the initial surface material, samples should be taken for each significant change in subsurface material or at representative intervals to the end of the borehole unless groundwater is encountered.
- One sample at the groundwater table or within 5 ft below the groundwater table (if the groundwater table is within the limits of the proposed pile foundation)
- Perched water may not be considered the same as groundwater (see Figure 7.1-1).
- Composite samples from more than one soil type or formation are not recommended. Since a single corrosive sample defines the entire borehole as corrosive, composite samples potentially dilute the corrosivity of the borehole.
- When borings are conducted through permanent free standing bodies of water (marine or fresh) sampling of the underlying soils for corrosion should not be necessary.
- When sampling for proposed retaining walls with pile foundations, sampling should be representative both vertically (depth of proposed piles) and horizontally along the wall length. This is especially true close to marine environments where tidal fluctuations through the soil over time may have resulted in highly variable zones of corrosivity along the alignment of the proposed project.

[1] Deep Foundations are structural assemblies that transfer load into deeper earth materials, such as piles, driven piles, drilled shafts or micropiles as defined in *Bridge Memo to Designers* 3-1 (Reference 8).

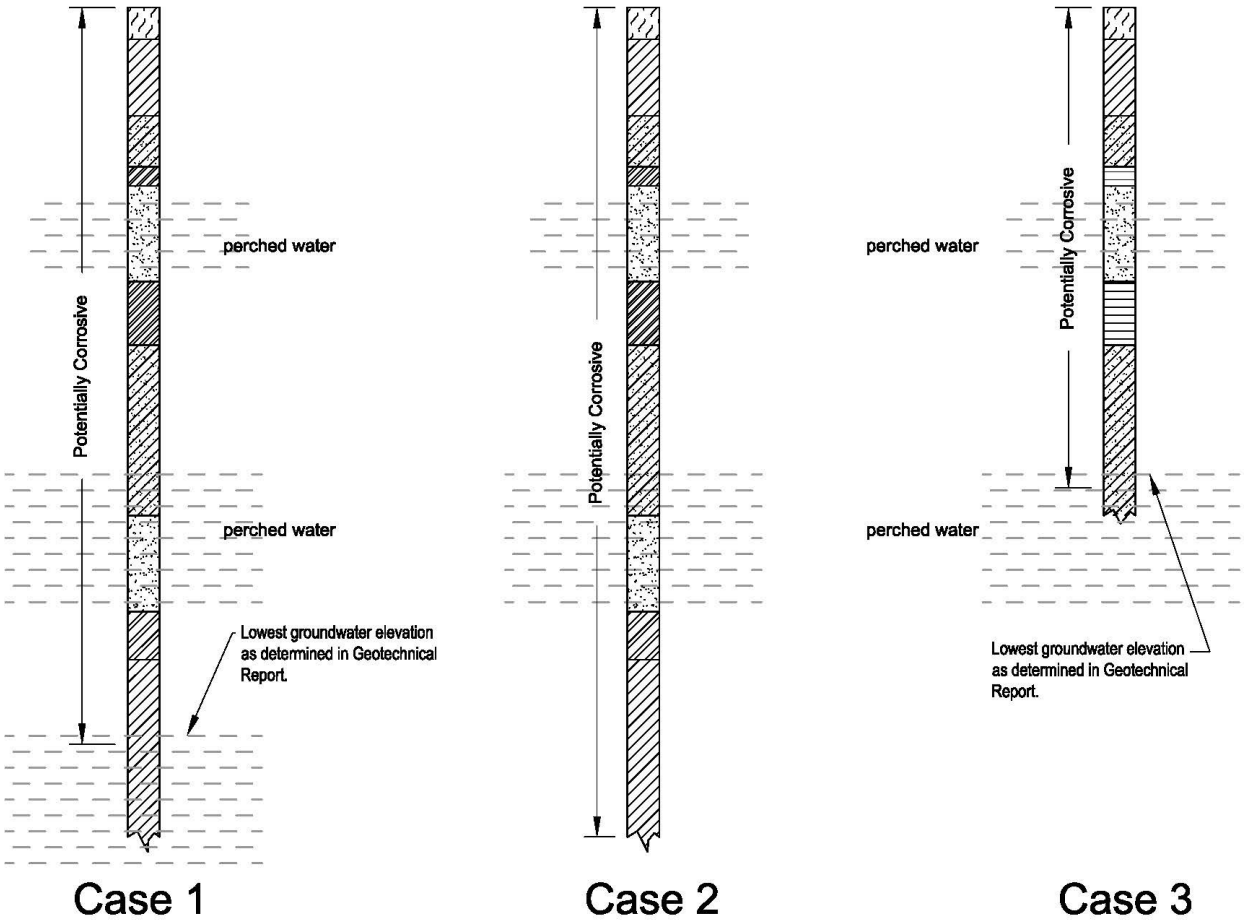

Figure 7.1-1: Cases for perched water.

A. **Case 1.** Pile extends through 1 or more zones of perched water as identified in the Geotechnical Report, terminating below the lowest elevation for regional groundwater at the site as defined by the Geotechnical Report. For Case 1, the hole is treated as "dry" above the groundwater with corrosion potential from the surface to 3 ft below the groundwater elevation.

B. **Case 2.** Pile extends through 1 or more zones of perched water as identified in the Geotechnical Report, terminating above the lowest elevation for regional groundwater at the site as defined by the Geotechnical Report. For Case 2, the hole is treated as "dry" with corrosion potential from the surface to the pile tip elevation.

C. **Case 3.** Pile extends through 1 or more zones of perched water as identified in the Geotechnical Report, terminating in a perched water zone and above the lowest elevation for regional groundwater at the site as defined by the Geotechnical Report.

For Case 3, the hole is treated as "dry" with corrosion potential from the surface to three feet below the perched water elevation for the zone that the pile tip ends in.

The project Engineering Geologist or Engineer can make exceptions to the sampling guidelines. In some cases, the project geologist may feel that redundant sampling at the designed intervals is not necessary. The decision not to sample at the recommended intervals as described for each boring shall be based on valid reasons. Those reasons should be noted in writing in the field logs and in the Geotechnical Report. For example, if a soil formation is present at multiple boring locations within the same structure site, it may not be necessary to obtain samples of the same formation from all borings.

The Corrosion and Structural Concrete Field Investigation Branch reviews pile anomalies for Construction and Foundation Testing. As part of that review, the Corrosion Branch reviews all corrosion data related to the proposed site. This includes, but is not limited to the distance from the borehole to the pile under review, number of boreholes, sampling frequency and depth in boreholes, the depth of each anomaly and the groundwater table. In some cases, the Corrosion Branch has rejected the conclusions of the Geotechnical Report that the soil is not corrosive due to insufficient representative sampling. In those cases, the Corrosion Branch recommended repair or additional testing of the soils adjacent to the pile in question. This can result in a delay of the construction work while the contractor does additional soil sampling and sends in the soils for testing.

7.2 Water Sampling for Foundations and Geotechnical Investigations

Water samples should be obtained from surface water bodies at or near the structure site. This includes water from nearby bodies of water even though the structure may not come into direct contact with the water. For example, ***Section 5.12.3*** (see References ***Section 5 Concrete Cover*** of ***California Amendments (to the AASHTO LRFD Bridge Design Specifications)***), requires corrosion mitigation for reinforced concrete structures located within 1000 ft of corrosive water (i.e., surface water with more than 500 ppm chlorides). Consequently, sampling of nearby water is particularly important at coastal locations or if the water body is subject to tidal influence. Use a clean wide-mouth beaker to collect the water sample. Swirl to rinse the beaker and pour out the contents to avoid contamination from the container. Fill the rinsed wide-mouth beaker a second time and retain the sample for laboratory testing. Pour off any film that is on the surface of the sample. One liter of water is sufficient for the laboratory to conduct resistivity, pH, chloride, and sulfate testing. Transport the water sample in a sealed plastic container. The container used to transport the water should also be rinsed with the surface water to avoid contamination from the container.

If a well or piezometer is available for groundwater sampling, a narrow plastic sampling tube or bailer may be lowered into a clean, stabilized borehole. The sampler should be rinsed with the groundwater to avoid contamination from the container. After swirling and rinsing, lower the sampler a second time and retain the sample for laboratory testing. Pour off any film that is on the surface of the sample. One liter of water is sufficient for the

laboratory to conduct resistivity, pH, chloride, and sulfate testing. Transport the water sample in a sealed plastic container. The container used to transport the water should also be rinsed with groundwater to avoid contamination from the container.

7.3 Bridge Foundation Scour Assessment Related to Corrosion

Scour can accelerate corrosion of steel piling. If scour is anticipated, the corrosion investigation shall include information such as anticipated scour depth and scour frequency. For steel piling, additional metal thickness or protective coatings may be needed.

7.4 Reporting Corrosion Test Results for Foundations

For every soil and or water sample submitted to the Corrosion and Structural Concrete Field Investigation Branch, a Corrosion Test Summary Report is prepared and sent to the Engineer or contact submitting the sample for testing. These reports list the results of the corrosion tests conducted on the soil and/or water samples representative of each proposed structure site. This report also designates whether the site is corrosive or not corrosive based on the criteria established by these guidelines, and specifies the controlling ("worse case") corrosion parameter test results that are used by the specification writers/designers to provide corrosion mitigation measures for each proposed structure. Geotechnical Services will generally summarize the corrosion test results for site samples in the Foundation Report or Geotechnical Design Report.

7.5 Steel Piles

The corrosion rate of steel piles in soil is influenced by a number of corrosion related parameters. These include soil minimum resistivity, pH, chloride content, sulfate content, sulfide ion content, soil moisture, and oxygen content within the soil. Measurement of these parameters can give an indication of the corrosivity of a soil. Unfortunately, because of the number of factors involved and the complex nature of their interaction, actual corrosion rates of driven steel piles cannot be determined by measuring these parameters. Instead, an estimate of the potential for corrosion can be made by comparing site conditions and soil corrosion parameters at a proposed site with historical information at similar sites.

In general, the corrosion behavior of structural steel in soil can be divided into two categories, corrosion in disturbed soil and corrosion in undisturbed soil. A disturbed soil is a soil in which digging, backfilling, or other soil upheaval has taken place. Driven steel piles generally have the majority of their length in undisturbed soil. However, excavation and backfilling for footings and pile caps create a region of disturbed soil near the top of the piles, increasing the availability of oxygen and the probability of corrosion.

A major contributor to increased corrosion rates of driven steel piles in soil is the availability of oxygen. In general, oxygen content is greater near the upper portion of the pile, greater in disturbed soils, and greater in soil near a ground water surface. Soil disturbance in the upper region of the pile may create areas of differential aeration within

and just below the disturbed soil zone. This may lead to increased pitting corrosion of the steel piles within or near the disturbed zone.

Local corrosion cells may exist in some miscellaneous fills that can lead to increased corrosion rates of driven steel piles. These miscellaneous fills include combinations of natural soils (clays and sands), construction debris, ash and cinder material, as well as waste inorganic materials. Increased corrosion rates have been documented in these fills where soil pH was low, 5.5 or less, and soil minimum resistivity was below 1,000 ohm-cm. For these reasons, it is always recommended to test fill material for corrosivity.

When steel piles are used in corrosive soil or corrosive water, special corrosion protection considerations for the steel may be needed. The extent of corrosion protection for steel piles will depend on the subsurface geology, the location of the groundwater table, and the depth to which the soil has been disturbed. Corrosion protection mitigation may include the need for sacrificial metal (corrosion allowance) or the use of protective coatings and/or cathodic protection.

Steel piling may be used in corrosive soil and water environments provided that adequate corrosion mitigation measures are specified. The Department typically includes a corrosion allowance (sacrificial metal loss) for steel pile foundations. Sacrificial metal or corrosion allowance is the thickness of metal (above what is structurally required for the pile) needed to compensate for the loss of metal that will occur as the pile corrodes. This extra metal thickness is added to all surfaces of the pile exposed to the corrosive soil or water.

The Department currently uses the following corrosion rates for steel piling exposed to corrosive soil and/or water or marine environments as specified in ***Section 10.7.5*** of ***Section 10: Foundations California Amendments (to the AASHTO LRFD Bridge Design Specifications)*** (see References).

Soil Embedded Zone	**0.001 in (0.025 mm) per year**
Immersed Zone (marine)	**0.004 in (0.102 mm) per year**
Splash Zone (marine)	**0.005 in (0.127 mm) per year**

The Corrosion Branch provides the following more detailed breakdown as additional guidance to corrosion rates for steel piling exposed to corrosive soil and/or water or marine environments.

Soil Embedded Zone	**0.001 in (0.025 mm) per year**
Atmospheric Zone (marine)	**0.002 in (0.051 mm) per year**
Immersed Zone (marine)	**0.004 in (0.102 mm) per year**
Scour Zone (marine)	**0.005 in (0.127 mm) per year**
Splash Zone (marine)	**0.006 in (0.152 mm) per year**

The corrosion rates apply only if the soil and/or water are corrosive. The atmospheric zone is defined as a distance of 1000 ft measured from the water. If a site is characterized as not corrosive, then no corrosion allowance (sacrificial metal loss) is necessary. This information is also included in ***Bridge Memo to Designers*** (see References) ***Section 10-5 Protection of Reinforcement Against Corrosion Due to Chlorides, Acids and Sulfates***.

For steel piling driven into undisturbed soil, the region of greatest concern for corrosion is the portion of the pile from the bottom of the pile cap or footing down to 3 ft below the water table. This region of undisturbed soil typically has a replenishable source of oxygen needed to sustain corrosion. A corrosion rate of 0.00098 in (0.025 mm) per year should be used for the length of pile in this region. No corrosion rate is required for the length of pile outside of this region.

The corrosion rates listed above should be doubled for steel H-piling since there are two surfaces on either side of the web and flanges that are exposed to the corrosive soil and/or water. For example, the length of a steel H-pile that is immersed in corrosive water and has a 75-year design life should have a corrosion allowance of 0.6 in (15 mm), calculated using 0.004 in/yr (0.1 mm/yr) x 75 years x 2 exposure faces.

For steel pipe piling, used in corrosive soil and/or water, the corrosion allowance is only needed for the exterior surface of the pile. The interior surface of the pile (soil plug side) will not be exposed to sufficient oxygen to support significant corrosion.

The above corrosion rates and allowances for piles are also applicable to permanent steel shells, used at corrosive sites that are intended to carry axial or lateral structural load. However, steel casings do not need a corrosion allowance when they are used only for constructability, and are not intended to carry axial or lateral structural load.

The use of coatings on driven steel piles may be considered as an alternative corrosion protection strategy. Before this alternative is selected, however, the need to protect the coating from damage during the driving operation, coating repair strategies, and the method of field coating pile splice sections should be considered. Contact the Corrosion and Structural Concrete Field Investigation Branch of METS for assistance with selecting coating alternatives.

When coatings are proposed to mitigate corrosion of steel piles, the effect of the coating on the skin friction capacity of the pile should also be considered. Contact the DES Geotechnical Services for assistance with concerns related to reduced skin friction capacities of piles.

7.6 Cast-In-Drilled-Hole (CIDH) Pile Anomalies

CIDH piles with anomalies may need to be repaired, supplemented, or replaced depending on the extent of anomalies within the CIDH pile. ***Bridge Memo to Designers*** (see References) ***Section 3-7 Design Data Documentation and Evaluation of Anomalous***

Concrete Shafts provides information regarding the acceptance, rejection, and mitigation requirements for CIDH piles. The Corrosion and Structural Concrete Field Investigation Branch reviews anomalies indicated on the Pile Design Data Forms (distributed by the Foundation Testing Branch) for corrosion potential.

Consideration of corrosion potential is only needed for anomalies that are between the top of the pile and 3 ft below the lowest possible ground water surface (see Section 7.1 for perched water considerations). For anomalies outside these limits, and where no stray current source is identified, no consideration of corrosion potential is required. The rationale for this requirement (excluding the issue of possible corrosion from outside electrical sources) is that sufficient oxygen is not available below the ground water surface to promote significant corrosion of nearly exposed or exposed steel (such as reinforcement at or near a pile anomaly).

8. MSE STRUCTURES

Most Mechanically Stabilized Embankment (MSE) structures are proprietary systems that require prior design and material use approvals. The list of pre-approved alternative Earth Retaining Systems is maintained by the Department (http://www.dot.ca.gov/hq/esc/approved_products_list/). The DES Office of Structure Policy & Innovation (SPI) approves the design. The Corrosion and Structural Concrete Field Investigation Branch of METS reviews the corrosion aspects of newly proposed systems.

Most MSE structures are equipped with inspection elements that are either galvanized steel rods or straps, depending on the form of soil reinforcement (rod or strap) used in the actual MSE structure construction. Inspection elements are included in the initial construction of MSE structures so that they may be retrieved at a later date and assessed for corrosion and remaining structural capacity. Since the inspection elements are placed at various locations and levels in the wall, and since they are exposed to the same conditions as the actual MSE soil reinforcement, they may be used to provide an estimate of the overall condition of the MSE structure. Inspection elements are typically scheduled for retrieval at 5, 10, 20, 30, 40, and 50-year intervals.

8.1 Corrosion Requirements for MSE Structure Backfill

The Department's ***Standard Specifications Section 47-2.02 Structure Backfill*** (see References), requires that the structure backfill material for an MSE structure meet the following corrosion related requirements:

1. Minimum resistivity must be greater than 2000 ohm-cm, ***CT 643***
2. Chloride concentration must be less than 250 ppm, ***CT 422***
3. Sulfate concentration must be less than 500 ppm, ***CT 417***
4. pH must be between 5.5 and 10.0, ***CT 643***

MSE backfill material that meets the above criteria will be considered not corrosive to both the metallic soil reinforcement as well as the reinforced concrete retaining wall. In addition to specifying not corrosive soil, the metallic soil reinforcement must be galvanized in accordance with the Department's standard galvanizing requirements ***Standard Specifications Section 75-1.05*** (see References).

8.2 Corrosion Sampling and Testing for MSE Structures

The contractor is responsible for using non-corrosive soil and water for MSE wall construction. When a source of backfill material (borrow site) is being proposed for use in constructing an MSE structure, the entire source area should be representatively sampled and tested to establish that all the material within the area to be used for structure backfill meets the minimum requirements. This may require taking many samples to properly describe the corrosivity of the proposed backfill material. If any of the material within a proposed borrow source does not meet the minimum requirements, those areas shall be clearly defined as "off limits".

In addition to "borrow-site" sampling performed by the contractor, the Department requires backfill sampling and testing during construction for quality assurance. ***Bridge Construction Memo 145-8.0, Mechanically Stabilized Embankment Wall Construction Checklist, June 28, 2006***, (see References), advises the Structure Representative to obtain one 60 lb sample of backfill material for each level where inspection elements are installed. The Corrosion and Structural Concrete Field Investigation Laboratory only requires **10-20 lbs** of backfill for corrosion testing.

8.3 Reporting Corrosion Test Results for MSE Structures

Corrosion test results for backfill samples, submitted to the Corrosion and Structural Concrete Field Investigation Laboratory for testing, will be reported on a Corrosion Test Summary Report and sent to the Engineer or contact submitting the sample for testing.

9. SOIL AND ROCK ANCHOR SYSTEMS

Soil and rock anchors typically consist of steel bar-type tendons or strand-type tendons and anchor assemblies that are grouted in cored or drilled holes. Soil or rock anchors are classified as Tieback Anchors, Tiedown Anchors, or Soil Nails. The following information is intended to give some brief background regarding these systems. Additional detailed information can be found in the Department's ***Foundation Manual*** and the ***Caltrans Geotechnical Manual*** (see References).

9.1 Tieback Anchors

Tieback Anchors are used in both temporary and permanent structures. These types of anchors are typically associated with retaining walls and may contain either bar-type or strand-type tendons that are grouted into drilled holes of on-site foundation materials (either soil or rock). Corrosion mitigation measures for Tieback Anchors are specified in the contract special provisions and ***Tieback Anchors*** see Reference ***Structures 2006***

Reference Specification.. They include the use of PVC, HDPE or polypropylene sheathing, corrosion inhibiting grease and cementitious grout.

9.2 Tiedown Anchors

Tiedown Anchors are typically foundation anchors for bridge footings that are grouted into cored, formed or drilled holes. They are used to provide additional restraint against rotation of the footings and can be installed in both soil and rock. Components of Tiedown Anchors are similar to those of Tieback Anchors. Corrosion mitigation measures are specified in the contract special provisions and ***Tiedown Anchors*** see Reference ***Structures 2006 Reference Specification***. They include the use of PVC, HDPE or polypropylene sheathing, corrosion inhibiting grease and cementitious grout.

9.3 Soil Nails

Soil nailing is a technique that is used to reinforce and strengthen an existing embankment. It is an effective technique used for large excavations. The basic concept is that soil is reinforced with closely spaced, grouted soil anchors or "nails" that are inserted (drilled) into the existing foundation material. Unlike Tieback and Tiedown Anchors, Soil Nails are not post-tensioned. They are forced into tension as the ground deforms laterally in response to the loss of support caused by continued excavation. Corrosion mitigation measures are provided based on the corrosivity of the site, and are included in the contract special provisions and ***Soil Nail Assembly*** see Reference ***Structures 2006 Reference Specification***. Depending on the site conditions, corrosion mitigation measures may include sheathing with HDPE, epoxy-coated reinforcement and cementitious grout.

9.4 Rockfall Mitigation

Rockfall protection facilities in corrosive environments should be protected against corrosion. In accordance with the plans, special provisions and type of system specified, galvanizing and epoxy coating are typical acceptable protective measures. Where wire or cable may be subjected to damage by rockfall, stainless steel should be considered. For assistance regarding the corrosion evaluation and mitigation, contact the Corrosion and Structural Concrete Field Investigation Branch.

9.5 Gabions

Section 72-16 Gabions of the ***Standard Specifications*** details the requirements for Gabions. For assistance regarding the corrosion evaluation and mitigation measures for gabions, refer to the 2001 ***Gabion Mesh Corrosion*** publication and the ***Caltrans Geotechnical Manual*** (see References).

10. CULVERTS

The District Materials Branch (or the consultant under contract) is responsible for conducting a corrosion investigation for drainage facilities. This includes culverts to be repaired or replaced in addition to proposed new sites. For a rehabilitation project, it is common practice to perform a culvert survey of existing drainage facilities to determine the need for clean-out, repair, and/or replacement.

When a culvert has failed prematurely, sampling and testing of in-situ soil and water for selection of appropriate replacement culvert materials is suggested. Representative samples of both the soil and drainage water should be collected and tested. Ultrasonic testing of the wall thickness can be measured at the request of the Corrosion and Structural Concrete Field Investigation Branch of METS.

10.1 Corrosion Sampling and Testing for Culverts

Corrosion investigations for culverts should include sampling of in-situ soil within the limits of the existing or proposed culvert, sampling of water that will or does flow into the culvert, and sampling of any fill material used as backfill for the culvert. If a project will have multiple culverts, samples of soil and water should be obtained from each specific location on the project site.

Representative surface water samples taken for proposed off-site drainage should be selected from the live stream or existing standing water at the inlet end of the facility. Water samples should never be taken when the water level is elevated due to recent storm runoff or flooding. Elevated stream flows dilute chemical concentrations in the stream making the sample concentrations appear lower than usual. Corrosion testing of soil samples (both surface and subsurface soil samples) and water samples shall follow the methods outlined in the ***California Tests*** (see References).

When imported material is used as structure backfill for metal products such as steel pipe culverts or reinforced concrete culverts and headwalls, the imported backfill should be less corrosive than the native soil material. Consequently, the contract special provisions should specify corrosive parameters for the imported fill that are less corrosive than those of the native soil. The imported backfill should be tested in accordance with ***CTs 643***, ***417***, and ***422*** prior to placement. This applies to imported soil and lightweight aggregate fill.

Slag based materials high in sulfate concentrations can attack the cement mortar in reinforced concrete pipe. If slag aggregate has been or is proposed for use as culvert backfill, it must be tested to determine its' suitability as structure backfill material.

Field screening tests for resistivity and pH as identified in ***CT 643*, *Part 1 and Part 2***, can be used to quickly identify the most aggressive on-site soil samples for corrosion testing. This simple screening test can eliminate the need for obtaining multiple soil samples for lab tests. If suitable field-measuring equipment is not available to perform the screening tests,

it is important to obtain sufficient soil material to be representative of all material within the proposed limits of the culvert.

10.2 Culvert Material

The selection of culvert material is based on the corrosion test results from ***CT 643*** (both soil and water testing) and the criteria presented in Chapter 850 of the ***HDM***. The software, *ALTPIPE* see Reference, (***Alternative Pipe Culvert Selection (ALTPIPE)***) is available for selecting culvert material based on site conditions.

Galvanized Steel Pipe

The years to first perforation and the maintenance-free service life and is based solely on the minimum resistivity and pH of the soil and/or water samples as shown in Figures 855.3A (Minimum Thickness of Metal Pipe for 50 Year maintenance-Free Service Life) and 855.3B (Chart for Estimating Years of Perforation of Steel Culverts), Chapter 850 of the ***HDM***.

In corrosive environments, protective coatings, linings, and pavings on the inside and/or outside of steel pipe and culverts can be used to extend the maintenance-free service life. Chapter 850 of the ***HDM*** and ***Section 66-1.02C Protective Coatings, Linings, and Pavings*** **of the** ***Standard Specifications*** (see References) describes the various types of coatings and linings that may be selected to extend the maintenance-free service life.

Any damage to galvanizing, protective coatings, linings, and pavings that occurs during handling, installation, or construction must be rejected or repaired as specified in accordance with manufacturer's recommendations. Damage includes scratches, pinholes, cracks, or coating de-bonding.

Aluminum and Aluminized Steel (Type 2) Pipe

Aluminum culverts include corrugated aluminum pipe and pipe arches, aluminum spiral rib pipe, and structural aluminum plate pipe and arches. For a 50-year maintenance-free service life, aluminum can only be used if the soil, backfill, and drainage water meet the following:

1. Minimum resistivity must be greater than 1500 ohm-cm, ***CT 643***
2. pH must be between 5.5 and 10.0, ***CT 643***

As an alternative to coating steel pipe with zinc (i.e., hot-dip galvanizing), steel pipe can be aluminized (Type 2). Aluminized steel pipe is steel pipe that is protected against corrosion by hot-dipping in an aluminum coating. For a 50-year maintenance-free service life, aluminized steel (Type 2) pipe can only be used if the soil, backfill, and drainage water meet the following:

1. Minimum resistivity must be greater than 1500 ohm-cm, ***CT 643***
2. pH must be between 5.5 and 10.0, ***CT 643***

3. Minimum thickness of 0.0629 in (16 gauge)

Bituminous or polymerized coatings are not recommended for corrosion protection of aluminized steel, but may be used for abrasion resistance.

Non-reinforced Concrete Pipe

The use of non-reinforced concrete pipe can be advantageous when reinforcing steel is not required to provide strength. Without reinforcing steel, the presence of chloride and stray current cannot compromise the service performance of the pipe. Acidity and sulfates in the soil and/or water, however, can affect this type of pipe by attacking the cement. For corrosive environments (see Section 6.1 of these Guidelines), ***Section 90-1.02H Concrete in Corrosive Environments*** of the ***Standard Specifications*** applies.

Reinforced Concrete Pipe, Box Culverts and Arch Culverts

Reinforced concrete pipe (RCP) is typically precast, performs well under most conditions, and is commonly selected when a corrosive environment exceeds the limits for using corrugated metal pipe. For corrosive environments (see Section 6.1 of these Guidelines), ***Section 90-1.02H Concrete in Corrosive Environments*** of the ***Standard Specifications*** applies.

Plastic Pipe

Plastic pipe is not subject to corrosion and can be a good performer in areas that are corrosive. In general, exposure to sunlight (ultraviolet rays) has an adverse effect on the service life of plastic pipes and products. For a plastic pipe, ultraviolet (UV) rays from the sun can induce degradation and ultimately cause loss of mechanical properties, which may result in premature failure of the pipe. HDPE and PVC plastic pipes approved for use by the Department have UV inhibitors added for protection against sunlight.

When plastic pipe is installed in areas that may be subject to fire, consider using concrete headwalls or metal flared end sections to reduce the potential damage to the ends of the pipe. Also, accumulated debris and trash may carry a fire into the pipe.

10.3 Cement Slurry, Controlled Low Strength Material (CLSM) or Concrete Backfill for Culverts

When placing culverts in existing roadways, it is sometimes necessary to use fast setting concrete backfill. Admixtures used to accelerate the set time of concrete must be on the Departments Authorized Materials List.

11. CORROSION AND STRUCTURAL CONCRETE FIELD INVESTIGATION LAB SERVICES

11.1 Testing Services

The Corrosion and Structural Concrete Field Investigation Branch (CSCFI) provides various laboratory testing services for the Department's functional units. These services include corrosion testing of soil and water for minimum resistivity, pH, and water soluble sulfates and chlorides (***CTs 643, 417***, and ***422***, respectively); and testing of total chloride concentrations of concrete cores (***CT 404***). Other specialty tests and field investigations are performed when appropriate.

11.2 Field Investigation Team (FIT)

Material investigations are often required to provide an accurate assessment of an existing structure and structure site during an In-Depth inspection. The Office of Structural Materials (OSM) provides support to the office of Structure Maintenance and Investigations (SMI) for their In-Depth inspections.

These investigations are coordinated by the SMR (Structure Material Representative) local to the SMI's Area Bridge Maintenance Engineer's (ABME) region. SMR's assist ABME's with structure investigations where destructive testing of existing concrete (such as coring) is required and/or complex non-destructive testing (NDT) testing is needed.

Processing concrete for corrosion testing typically involves coring the structure and in the lab, cutting the core into 1.0 in segments, crushing the segments, and pulverizing each segment as a separate sample so that it will pass a (600 *u*m) size sieve. Chemical analyses for chlorides, in accordance with ***CT 404***, and if suspected, chemical analysis for sulfates ***CT 417***, are then performed on the minus No. 30 material.

It should be noted that cores taken at locations with cracks in the concrete or through delaminated areas generally have higher chloride concentrations compared to cores removed from non-cracked locations. For this reason, it is suggested that cores be taken at both sound locations as well as distressed locations to better assess the chloride level of the structure.

11.3 Reporting Corrosion Test Results

For soil and water samples, a Corrosion Test Summary Report (PDF format) will be emailed to the contact listed on the TL-0101. The report summarizes test results for all samples received for a particular project site, whether or not the site is corrosive, and specifies the most corrosive parameters (worst case scenario) from all samples received for the site.

For concrete samples the Corrosion Test Summary Report will summarize the testing (compressive strength or chlorides) requested by the contact. Compressive strength values are provided per ASTM C39. Chloride values are sorted by depth starting at the concrete

core surface and described as shown in Table 11.1. A description of steel reinforcement condition is provided at the depth it is encountered.

Table 11.1
Chloride Concentration in Reinforced Concrete

ppm (kg/m^3)	lb/yd^3	Assumed Condition
0 to 0.7	0 to 1.2	Passive (not corroding)
0.9 to 1.8	1.2 to 3.0	Corrosion initiation
> 1.8	> 3.0	Active corrosion

Unused portions of sampled material will be kept in the Corrosion Lab for approximately 60 days after the test results are reported. After 60 days, the materials will be discarded. If needed, arrangements can be made to return the unused portions after testing. Requests to return the unused sample material should be made at the time of the requested services for corrosion testing.

12. CORROSION MITIGATION MEASURES

The following section provides some useful information regarding corrosion mitigation measures for structural elements. As previously mentioned, Department guidelines such as the ***Bridge Design Specifications***, ***Memos to Designers***, ***Standard Specifications***, ***Special Provisions***, ***Bridge Design Reference Specifications***, and the ***Highway Design Manual*** have been developed to cover these topics. The purpose of the information provided in this section is to provide additional background information regarding corrosion mitigation in addition to the listed Department guidelines.

12.1 Corrosion Mitigation Measures for Reinforced Concrete

Uncontaminated, high quality concrete normally provides excellent corrosion protection for reinforcing steel. The high pH environment, greater than 12.5, of the concrete keeps the reinforcing steel in a non-active corrosion state. Intrusion of chlorides into the concrete through contact with chloride-contaminated soil, water or marine atmosphere, however, may lead to corrosion of the embedded reinforcing steel.

Contact of the concrete with soil or water containing sulfates can, over time, cause deterioration, increased porosity, and decreased pH of the concrete. In addition to the obvious loss of integrity of the concrete, this degradation may also lead to accelerated corrosion of the reinforcing steel.

Corrosion protection of reinforced concrete is required in accordance with ***Section 5 Concrete Structures*** of ***California Amendments (to the AASHTO LRFD Bridge Design Specifications - Sixth Edition)*** (see References). ***Table 5.12.3-1 Minimum Concrete Cover (inches) for 75-year Design Life*** specifies the use of increased clear concrete cover over the reinforcing steel, corrosion resistant concrete mix designs, and epoxy coated

reinforcing steel for corrosion protection of reinforced concrete exposed to chloride environments. This document also provides mitigation measures to protect against corrosion due to acids or sulfates.

Section 90-1.02H Concrete in Corrosive Environments of the ***Standard Specifications*** provides specification language for corrosion resistant concrete mix designs that address corrosive conditions specified in ***Section 5 Concrete Structures*** above.

Concrete mixes used by the Department to mitigate chlorides are based on the diffusion rate of chlorides using Fick's Second Law of Diffusion. Dense concrete mixes that are less permeable slow the diffusion of chlorides through concrete. Therefore, the time for chlorides in the soil or water to reach the reinforcing steel is increased. It is desirable to slow the rate of chloride diffusion in reinforced concrete because high chloride contents at the level of the reinforcing steel will cause the reinforcing steel to corrode.

The use of supplementary cementitious materials (such as flyash, silica fume, metakaolin, etc.), reduced water content and increased cementitious material content result in high-density, durable concrete. Additional thickness of clear cover over the reinforcing steel also increases the time it takes for chlorides to reach the level of the reinforcement. ***Bridge Memo to Designers 3-1*** and ***10-5*** (see References) provides additional guidance regarding protection against corrosion for reinforced concrete due to chlorides, sulfates, and acids.

In addition to low permeability concrete and increased cover to delay the initiation of corrosion, the Department also specifies epoxy-coated reinforcing steel (ECR) for reinforced concrete subjected to high concentrations of deicing salt (Climate Area III) and salt or ocean water.

12.2 Epoxy-coated Reinforcing Steel

The Department's ***Standard Specifications Section 52-2 Epoxy-Coated Reinforcement and Epoxy-Coated Prefabricated Reinforcement*** currently has specifications for two types of epoxy-coated reinforcing steel (ECR): Pre-fabricated ECR (purple or gray in color) and post-fabricated ECR (green in color).

Pre-fabricated ECR is specified for reinforced concrete that is in direct contact with water containing 500 ppm or more of chlorides, or in the marine splash zone. It is generally not used if only the soil is corrosive. For this type of coating, the reinforcing steel is cut to size and bent to shape (i.e., pre-fabricated) prior to being coated with a protective fusion bonded epoxy coating. Pre-fabricated ECR is not intended to be bent or re-bent after being coated. Epoxy powder formulations meeting the requirements of specified in Section 52-2 are "less-flexible", highly cross-linked coatings that contain special organic fillers which greatly enhance their resistance to water penetration, lower their susceptibility to loss of coating adhesion and under film corrosion, and provide greater resistance to ultraviolet (UV) radiation. These formulations are better suited to protect reinforcing steel in concrete placed in continuously wet marine environments when compared to post-fabricated epoxy

powder formulations. ***Bridge Memo-To-Designers 10-6*** (see References) provides additional guidance regarding the use of epoxy-coated reinforcement.

Post-fabricated (green) ECR formulations meet the requirements of Section 52-2 of the Department's ***Standard Specifications***. For this type of ECR, straight bars or wire are coated and subsequently cut and bent to shape. Post-fabricated ECR is generally used in Climate Area III where deicing salts are used.

12.3 Dampproofing and Waterproofing

When a coating is required to minimize exposure of concrete, reinforced concrete, or metal surfaces to moisture, dampproofing or waterproofing should be considered. ***Standard Specification 54 Waterproofing*** describes both methods in detail. Dampproofing and waterproofing may be considered for a concrete surface or for a column retrofit when a steel shell is used. Generally, corrosion can occur where the soil is in contact with the surface to be protected; therefore, it may only be necessary to treat those surfaces in contact with soil. Dampproofing and waterproofing may also be considered for protecting concrete surfaces exposed to highly acidic soil and/or water. These treatments may also be used as mitigation measures to protect RCP from stray current by coating the inside and outside of the pipe.

Dampproofing requires the concrete surface to be cleaned and coated with a primer, then mopped with two coats of waterproofing asphalt. Waterproofing is similar to dampproofing, but provides even more corrosion protection. In addition to cleaning and treating with a primer, two layers of saturated glass fabric membrane and three mop applications of waterproofing asphalt are required for concrete structures.

Because of air quality restrictions in some geographical regions, ASTM Designated material D-41, a solvent-based primer, may not be allowed. When the ASTM D-41 primer cannot be used, slow curing emulsion alternatives SS1H or CSS1H, specified in Section 94 of the ***Standard Specifications***, may be used (verify Volatile Organic Content (VOC) with approval of the local air quality management board.

14. MISCELLANEOUS TOPICS

14.1 Stray Current Mitigation

Although alternating current (AC) can cause corrosion, it is generally considered insignificant (more than a thousand times less) when compared to corrosion from direct current (DC).

Stray current corrosion (interference corrosion) is corrosion caused by direct current from an external source that travels through paths other than the intended circuit. Accelerated corrosion may result if the current is collected by a structure and leaves to enter the soil. Stray currents in bridge structure elements can be caused in two ways, either through direct connection or through a soil gradient.

Direct connection involves attaching a pipeline, electric railway track, or high-voltage contact system to bridge structure elements. Installation requires an approved insulator between the pipe or rail and the bridge element, and the high-voltage contact system requires double insulation for safety. Since concrete is not an insulator, a failed insulator, even if connected only to the concrete, will cause corrosion in bridge structure elements.

Discharging current into the soil produces soil gradients. The most common source is a cathodic protection system for a pipeline, which produces a steady DC voltage in the soil near the anode(s). By contrast, the DC soil voltage near a traction power substation (TPSS) is zero for a totally ungrounded TPSS, pulsing for a diode-grounded TPSS, and pulsing/reversing for some heavy rail TPSS.

Proposals for pipelines attached to bridge structures or located within two pipe diameters should be submitted for review. Also, notification of pipeline cathodic protection anode bed(s) located near a bridge (within one bridge length) should be included in the proposal.

Measures must be taken to mitigate possible stray current problems whenever they are anticipated or suspected. The above considerations given for bridge structures also apply to long steel culverts and pipes.

14.2 Dust Palliatives

At some construction sites dust palliatives may be applied for dust control. Prior to application, it must be determined whether the dust palliative will create a corrosion problem or be deleterious to concrete due to salt content in the palliative. Chlorides in the dust palliative can cause corrosion of pavement dowels, reinforced concrete, or steel structures. Also, sulfates in the dust palliative can attack Portland cement concrete pavement or concrete structures. There can be high accumulations of sulfates and chlorides, particularly if the dust palliative is applied in multiple applications. Contact the Corrosion and Structural Concrete Field Investigation Branch, if necessary for assistance related to the corrosion potential of dust palliative additives.

14.3 Miscellaneous Metals

Miscellaneous metal parts and components are often used in roadway facilities and transportation structures. Fasteners, concrete anchors, plates, and frames are just a few examples. Typical corrosion protection includes zinc galvanizing in accordance with the ***Standard Specifications***. However, in corrosive environments such as in coastal areas, the splash zone, or underwater, improved corrosion protection may be necessary. Stainless steel is often specified instead of galvanized steel. For critical components in corrosive environments, stainless steel Type 316 is preferred. Stainless steel Type 316 contains molybdenum that improves its corrosion protection over more commonly used stainless steels such as Type 304.

If you have questions regarding materials selection for miscellaneous metal parts and components, contact the Corrosion and Structural Concrete Field Investigation Branch of METS for assistance.

15. REFERENCES

The following corrosion references are taken from various Department documents and are presented here for the convenience of the users of these guidelines.

1. ***Standard Specifications*** (http://www.dot.ca.gov/hq/esc/oe/construction_standards.html).

2. ***Highway Design Manual, Chapter 850, Physical Standards*** (http://www.dot.ca.gov/hq/oppd/hdm/hdmtoc.htm).

3. ***Caltrans Geotechnical Manual*** (http://www.dot.ca.gov/hq/esc/geotech/geo_manual/manual.html).

4. ***Guidelines for Preparing Geotechnical Design Reports Version 1.3*** (http://www.dot.ca.gov/hq/esc/geotech/requests/gdrguidelines20061220.pdf).

5. ***Foundation Report Preparation for Bridges*** (http://www.dot.ca.gov/hq/esc/geotech/requests/fr_preparation_bridge.pdf).

6. ***Section 5: Concrete Structures*** of ***California Amendments (to the AASHTO LRFD Bridge Design Specifications -Sixth Edition)*** (http://www.dot.ca.gov/hq/esc/techpubs/manual/bridgemanuals/ca-to-aashto-lrfd-bds/page/v6/section_5.pdf).

7. ***Section 10***:***Foundations*** of ***California Amendments (to the AASHTO LRFD Bridge Design Specifications - Sixth Edition)***. (http://www.dot.ca.gov/hq/esc/techpubs/manual/bridgemanuals/ca-to-aashto-lrfd-bds/page/v6/section_10.pdf).

8. ***Bridge Memo-To-Designers*** (http://www.dot.ca.gov/hq/esc/techpubs/manual/bridgemanuals/bridge-memo-to-designer/bmd.html).

9. ***Bridge Construction Memo 145-8.0, Mechanically Stabilized Embankment Wall Construction Checklist, June 28, 2006*** (http://www.dot.ca.gov/hq/esc/construction/manuals/OSCCompleteManuals/BCRPVol2.pdf).

10. ***Foundation Manual*** (http://onramp.dot.ca.gov/hq/oscnet/sc_manuals/foundation/).

11. ***Structures 2006 Reference Specification*** (http://www.dot.ca.gov/hq/esc/structurespecs/bridge/06SPECS/).

12. ***Gabion Mesh Corrosion*** (http://www.dot.ca.gov/hq/oppd/hydrology/gabion.htm).

13. ***Alternative Pipe Culvert Selection (ALTPIPE)*** (http://www.dot.ca.gov/hq/oppd/altpipe.htm).

14. ***Bridge Design Specifications, Section 4, Foundations*** (http://www.dot.ca.gov/hq/esc/techpubs/manual/bridgemanuals/bridge-design-specifications/bds.html).

15. ***California Test 643, Method for Determining Field and Laboratory Resistivity and pH measurements for Soil and Water*** (http://www.dot.ca.gov/hq/esc/ctms/index.html).

16. ***California Test 422, Method of Testing Soils and Waters for Chloride Content*** (http://www.dot.ca.gov/hq/esc/ctms/index.html).

17. ***California Test 417, Method of Testing Soils and Waters for Sulfate Content*** (http://www.dot.ca.gov/hq/esc/ctms/index.html).

18. ***California Test 404, Test Method for the Chemical Analysis of Portland Cement Concrete, Fly Ash, Pozzolan, and Blended Cement*** (http://www.dot.ca.gov/hq/esc/ctms/index.html).