GODWIN K. MOK
C 54399
12/31/03

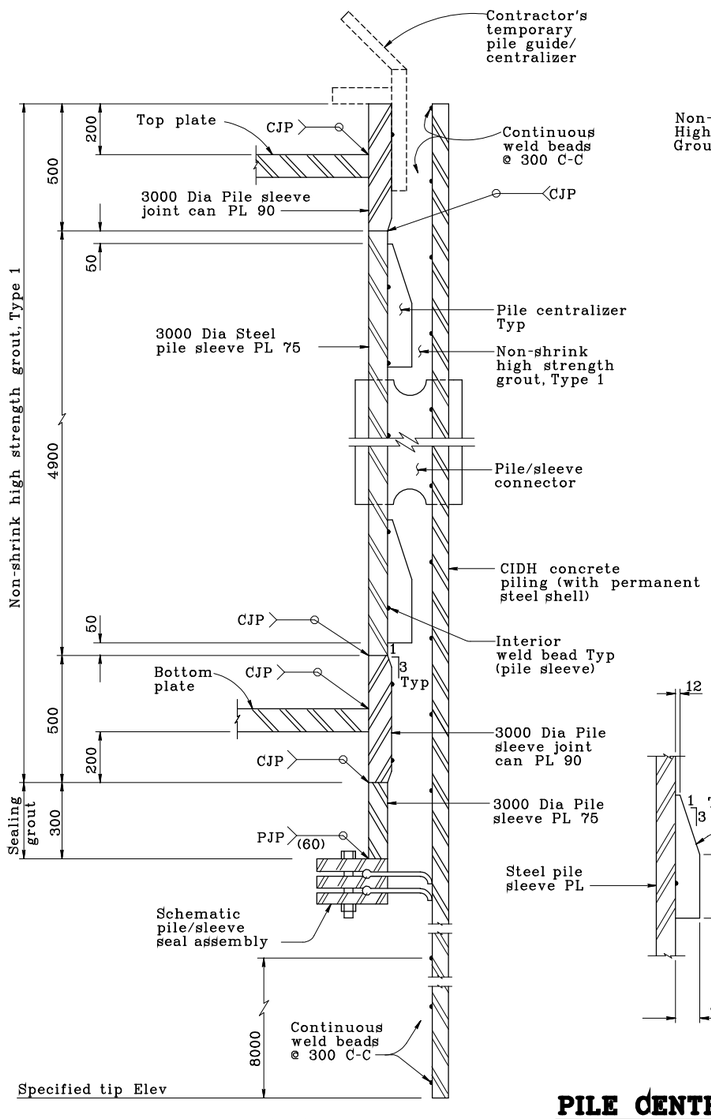

SECTION A-A
1:10

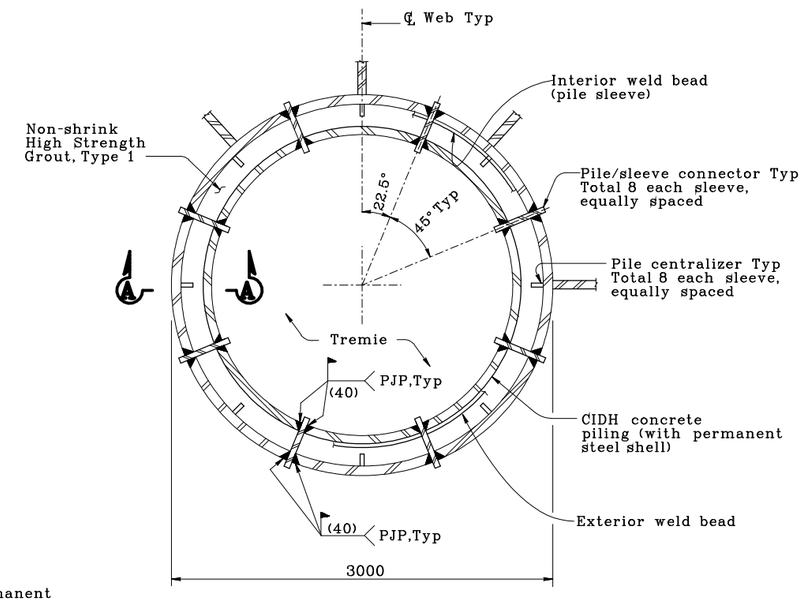

STEEL PILE SLEEVE DETAIL
1:20

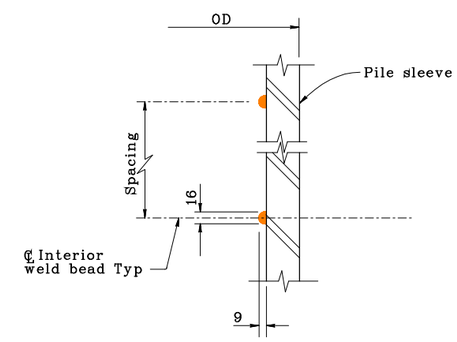

INTERIOR WELD BEAD (Pile sleeve)
1:5

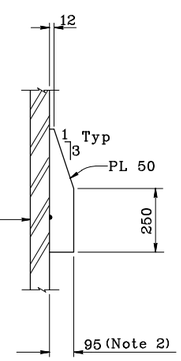

PILE CENTRALIZER
1:10

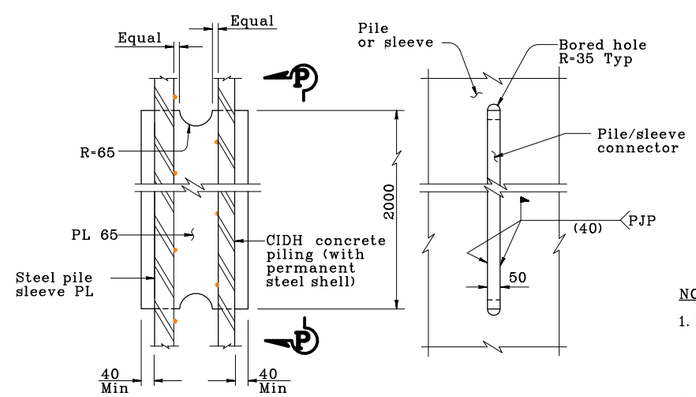

PILE/SLEEVE CONNECTOR SECTION P-P
1:10

NOTES:

1. Pile/sleeve seal assembly details are schematic. Contractor shall design the assembly for the sealing pressure required for a 6 meter column of 24 kN/m² grout. Selection of pile/sleeve seal assembly by Contractor.
2. Contractor shall field verify centralizer dimensions to ensure 75 mm Min clearance.

T040

G. Mok — J. Krizek
K. Tam — J. Krizek
G. Mok — K. Cormier

Main Span Suspension Bridge
Preliminary Plans - Not for construction. Subject to changes.

TOWER FOOTING DETAILS NO.6