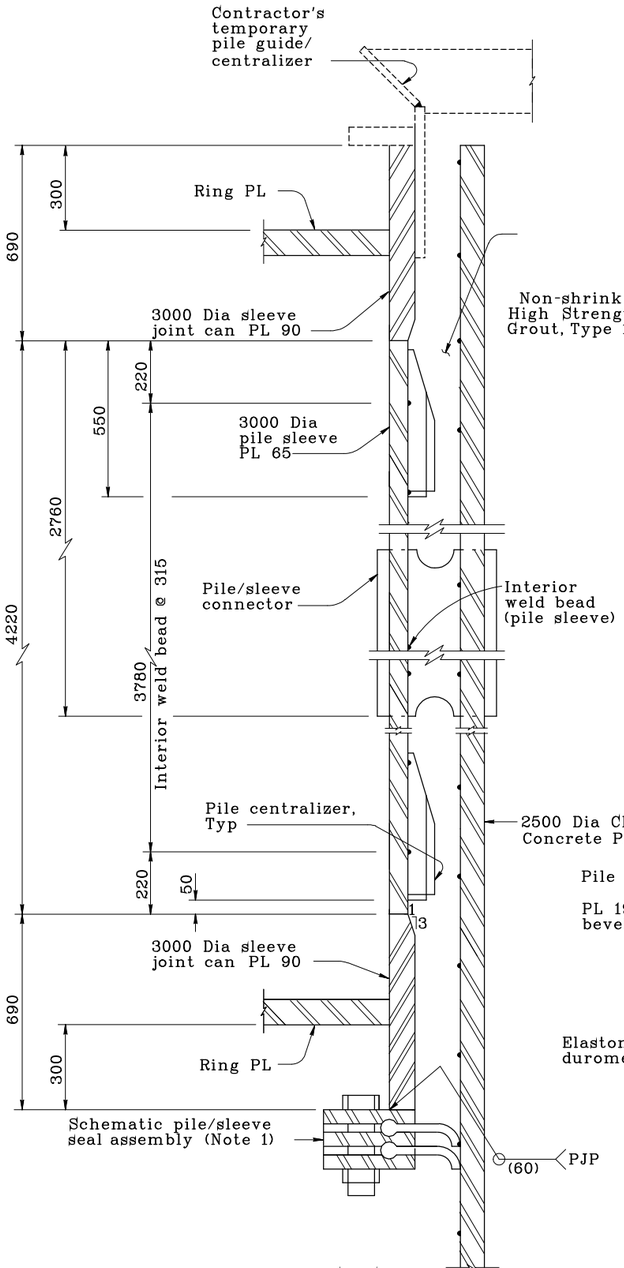

SECTION D-D
1:10

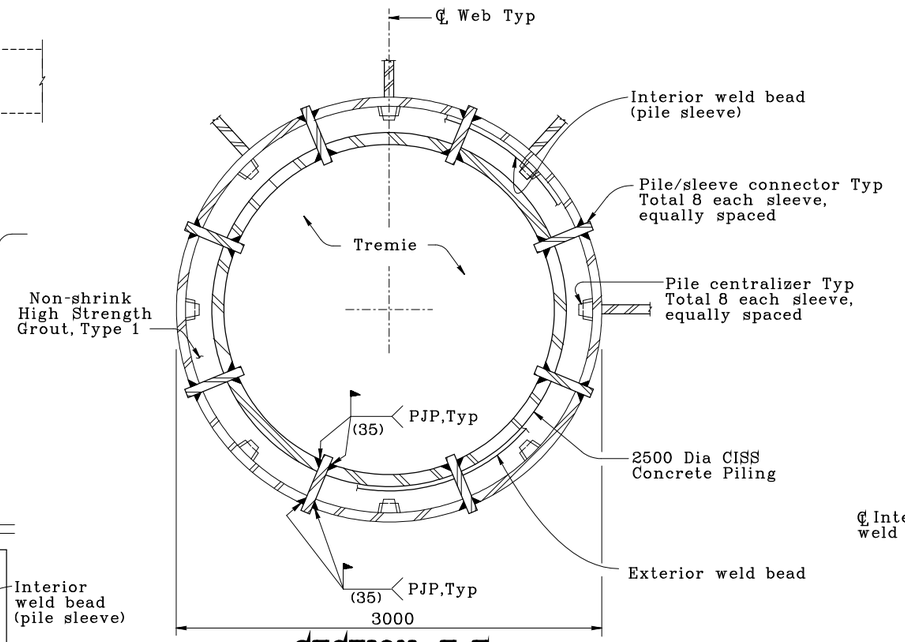

SECTION E-E
1:20

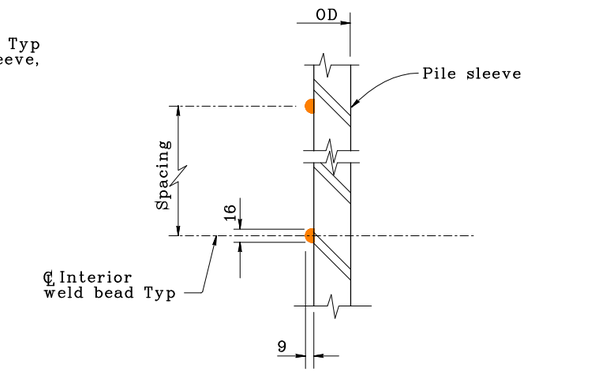

INTERIOR WELD BEAD (Pile sleeve)
1:5

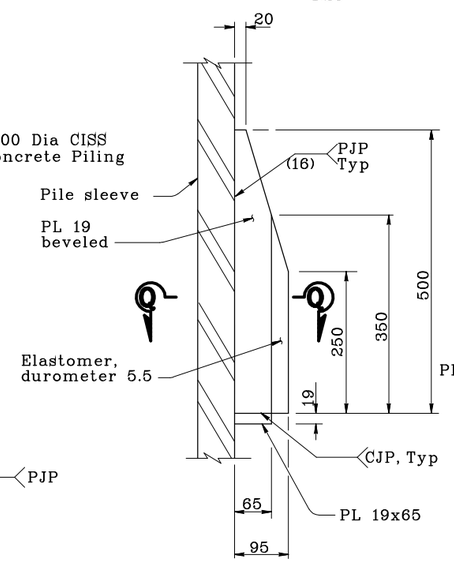

PILE CENTRALIZER
1:5

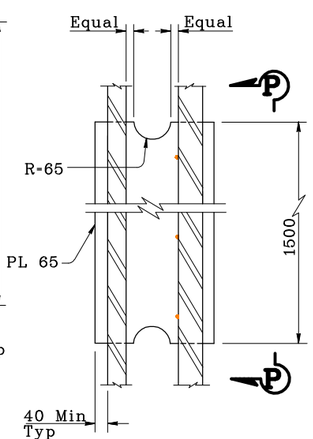

PILE/SLEEVE CONNECTOR
1:10

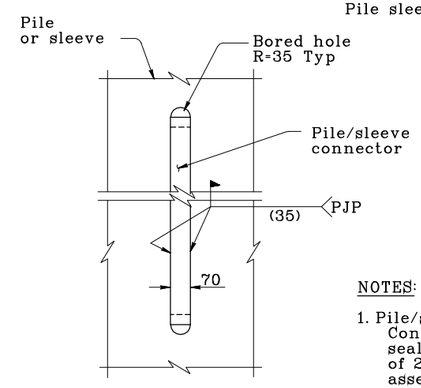

SECTION P-P
1:10

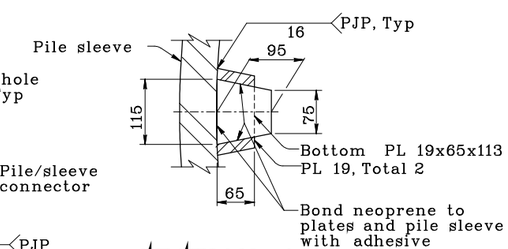

SECTION Q-Q
1:5

NOTES:

1. Pile/sleeve seal assembly details are schematic. Contractor shall design the assembly for the sealing pressure required for a 6 meter column of 24 kN/m² grout. Selection of pile/sleeve seal assembly by Contractor.
2. Contractor shall confirm centralizer dimensions to ensure 75 mm nominal grout thickness.
3. Elastomer on pile centralizers to be greased with water-soluble grease prior to pile installation.

Kirsten
S. Setterholm
C 41107
03/31/03

T047

Main Span Suspension Bridge
Preliminary Plans - Not for construction. Subject to changes.

E2 FOOTING DETAILS NO.3

05/15/99 08/02/99 05/31/01 06/01/01

047