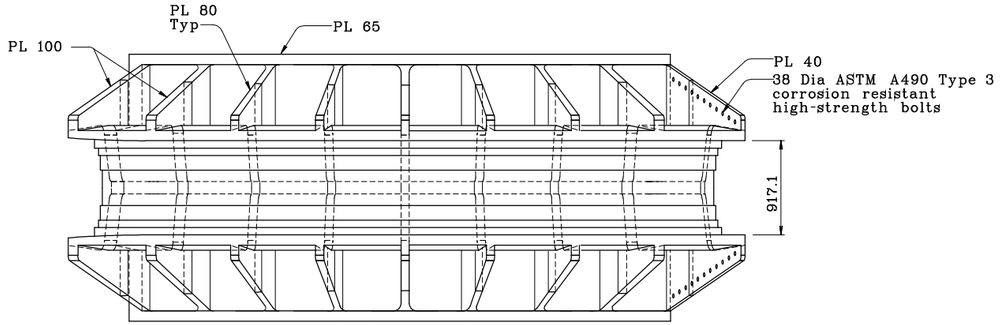


**SECTION C-C**
1:25
(Spacers not shown for clarity)

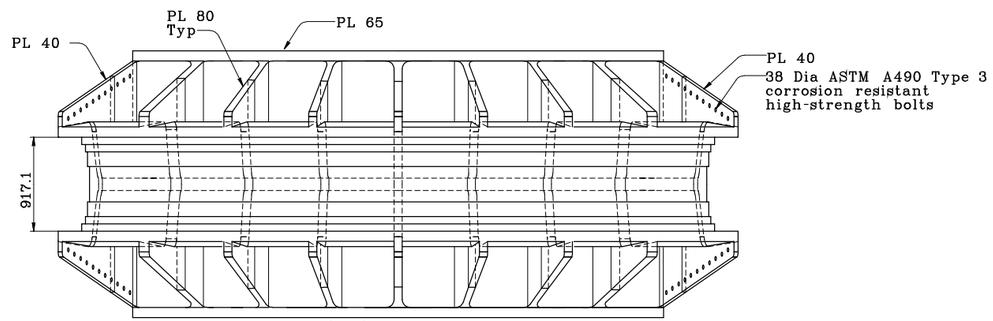


**SECTION D-D**
1:25
(Spacers not shown for clarity)

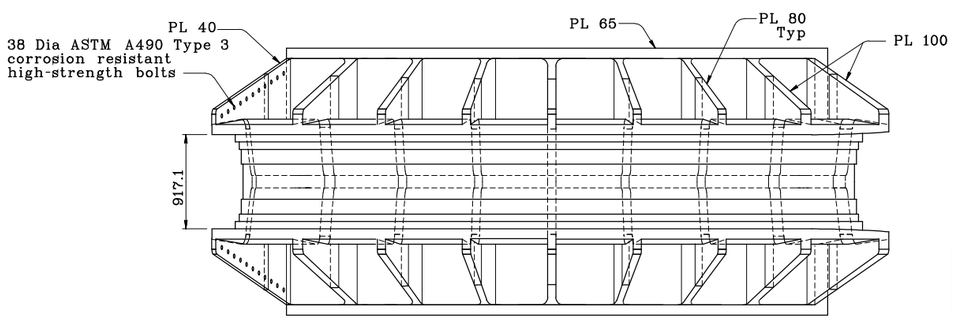


**SECTION E-E**
1:25
(Spacers not shown for clarity)

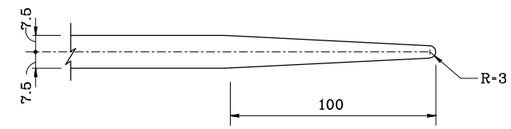


**DETAIL E**
1:1.25

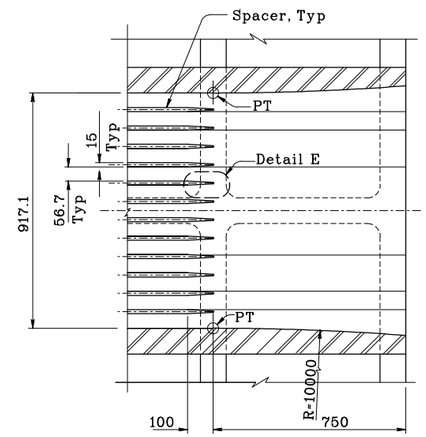


**SECTION F-F**
1:10

John Sun
C 54648
12/31/03

**Main Span Suspension Bridge**
**Preliminary Plans - Not for construction. Subject to changes.**

NOTES:

1. Spacer not shown in Sections C-C through E-E for clarity.

**T281**

| | |
|---|---|
| J. Sun | T. McMeans |
| J. Duxbury | T. McMeans |
| J. Duxbury | S. Shi |

**WEST DEVIATION SADDLE DETAILS NO.3**

05/15/99 08/02/99 05/23/01

281