East Bay Fenders (Contract No. 04-0474)

The as-built drawings, which are contained in these CDs, are scanned from drawings of the existing structure for the convenience of the contractor and as a means to convey to the contractor the available information regarding the existing structure. It is to be understood that no claim is being made as to the accuracy or completeness of the said information and that the State of California or its officers or agents shall not be responsible for the manner in which the contractor interprets and uses this information or for the accuracy, currency or completeness of these scanned as-built drawings. The contractor shall be responsible to obtain, at the contractor's expense, any additional information that the contractor deems necessary for completely and accurately assessing the existing conditions of the structure. The contractor shall not be entitled to any compensation for any claim arising from inaccuracy or insufficiency of these as-built drawings or in anyway related to these drawings.

1. General Plan
2. Pier E2 Modifications
3. Pier E3 Modifications
4. Piers E4 and E5 Nosing Removal and Timber Connection Details
5. Pier E4 Nosing Layout
6. Pier E-5 Nosing Layout
7. Connection Details – I
8. Connection Details – II
9. Connection Details – III
10. Piers #4 and E5 Railing Details

STATE OF CALIFORNIA

DEPARTMENT OF TRANSPORTATION

DIST.	COUNTY	ROUTE	POST MILES—TOTAL PROJECT	SHEET NO.	TOTAL SHEETS
04	SF	80	8.2/8.8	1	10

CHIEF, OFFICE OF STRUCTURE MAINTENANCE — REGISTERED CIVIL ENGINEER NUMBER 8066

DATE APPROVED July 9, 1984

CHIEF, OFFICE OF STRUCTURE ENGINEER
REGISTERED CIVIL ENGINEER NO. 8854

PROJECT PLANS FOR CONSTRUCTION ON STATE HIGHWAY

IN THE CITY AND COUNTY OF SAN FRANCISCO AT VARIOUS LOCATION
ON THE SAN FRANCISCO - OAKLAND BAY BRIDGE

To be supplemented by Standard Plans dated July, 1984

INDEX TO SHEETS

SHEET NUMBER	TITLE
1.	General Plan
2.	Pier E2 Modifications
3.	Pier E3 Modifications
4.	Piers E4 and E5 Nosing Removal and Timber Connection Details
5.	Pier E4 Nosing Layout
6.	Pier E5 Nosing Layout
7.	Connection Details - I
8.	Connection Details - II
9.	Connection Details - III
10.	Piers E4 and E5 Railing Details

STANDARD PLANS dated January, 1981
RSP B2-5 - PILE DETAILS - CLASS 45 and CLASS 70

AS BUILT PLANS
Contract No. 04-000474
Date Completed 9-23-85
Document No.

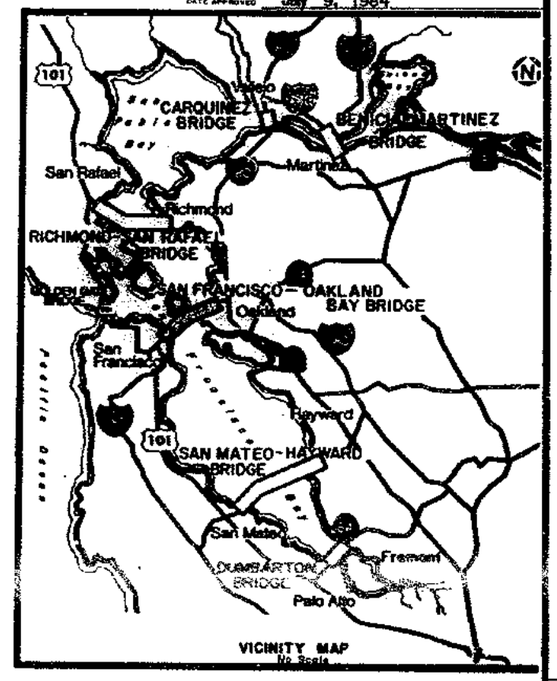

VICINITY MAP
No Scale

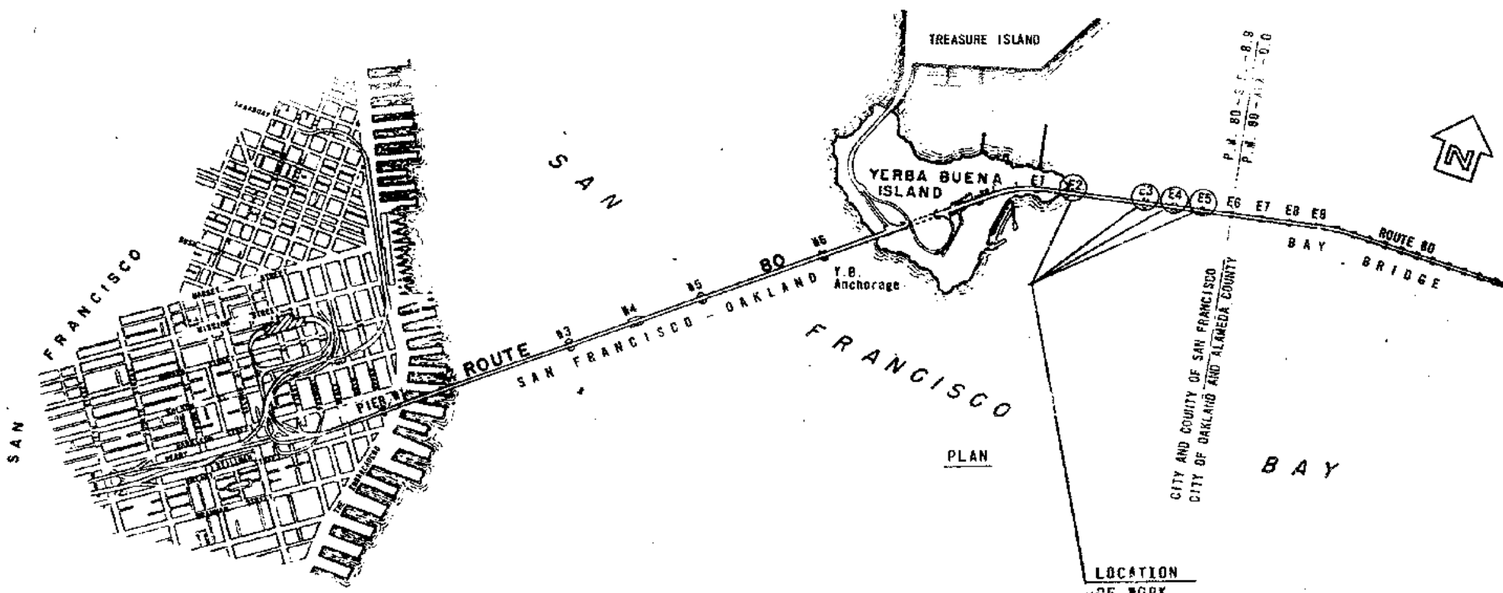

PLAN

LOCATION OF WORK

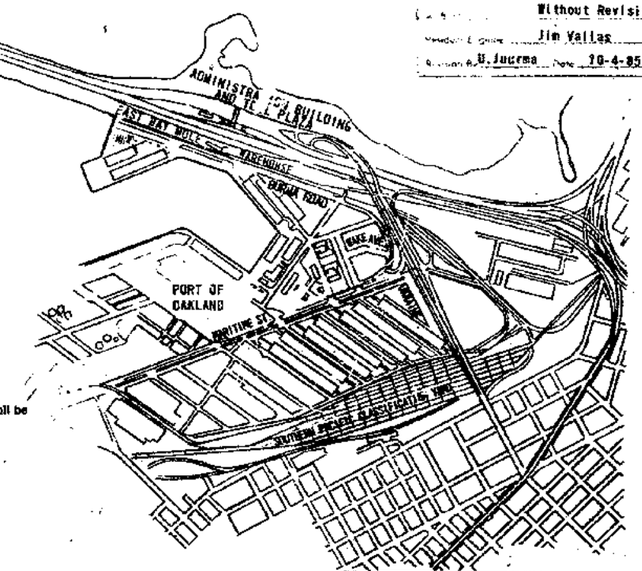

Contract No.	04-000474
Date Approved	9-23-85
Revision	Without Revision
Checked by	Jim Vallas
Revision Approved	B. Jaurma Date 10-4-85

GENERAL NOTES

1. All dimensions of the existing structure necessary to perform the work shown on these sheets shall be verified by the Contractor in the field. Dimensions shown for the existing structure are taken from construction drawings. The Contractor shall verify field dimensions and shall be responsible for finished structures fitting existing conditions since minor variations are to be anticipated.
2. All structural steel connections shall be made with 1" Ø H.S. bolts unless otherwise noted.
3. Provide 1" Ø drain holes through the webs of ring beam members, both levels, to assure drainage of all trapped water. Holes shall have a maximum spacing of 4 feet and shall be placed along the center line of the beams.
4. Elevations shown are based on S.F.O.B.B. M.L.L.W. Datum. S.F.O.B.B. M.L.L.W. Datum is 3.10 feet below National Geodetic Vertical Datum of 1929.

APPROXIMATE QUANTITIES

REMOVE EXISTING BRIDGE FACILITIES	LUMP SUM
FURNISH STEEL PILING (HP 14 x 117)	5,760 LF
DRIVE STEEL PILE (HP 14 x 117)	64 EA
TREATED DOUGLAS FIR TIMBER	55 MFBM
PROTECTIVE COATING	LUMP SUM
MARINE DOCK BUMPER	32 EA
REINSTALL CHANNEL MARKER LIGHTS	LUMP SUM

FINAL PAY QUANTITIES

PIER FENDER METAL WORK	122,200 LB

CONTRACT NO. 04-000474

Submitted by S. Larsen C12732 — Design Engineer — Registered Civil Engineer Number	DESIGN	By R.J. Cotto	Checked R. Bucknell	LOAD FACTOR DESIGN	LIVE LOADING: HS20-44 AND ALTERNATIVE AND PERMIT DESIGN LOAD
Approved for Revision by J.C. Hamilton C8695 — Design Supervisor — Registered Civil Engineer Number	DETAILS	By R.J. Cotto	Checked R. Bucknell	LAYOUT	By / Checked
	QUANTITIES	By R.J. Cotto	Checked R.C. Kiem	SPECIFICATIONS	By H.E. Gotti 37961 / Plans and Specs Compared 6/84

State of CALIFORNIA
DEPARTMENT OF TRANSPORTATION

STRUCTURES - DESIGN
Robert R. Bucknell 17862
PROJECT ENGINEER — REGISTERED CIVIL ENGINEER NO.

BRIDGE NO. 33-25
POST MILE 8.2-8.8

SAN FRANCISCO - OAKLAND BAY BRIDGE - EAST BAY FENDERS

GENERAL PLAN

ORIGINAL SCALE IN INCHES FOR REDUCED PLANS 0 1 2 3

CU 04 265
WO 000471

Disregard prints bearing earlier revision dates

REVISION DATES (PRELIMINARY STAGE ONLY)

SHEET 1 OF 10

DIST.	COUNTY	ROUTE	POST MILES—TOTAL PROJECT	SHEET NO.	TOTAL SHEETS
04	SF	80	8.2/8.8	2	10

DESIGN ENGINEER — REGISTERED CIVIL ENGINEER NUMBER C12732

DATE APPROVED July 9, 1984

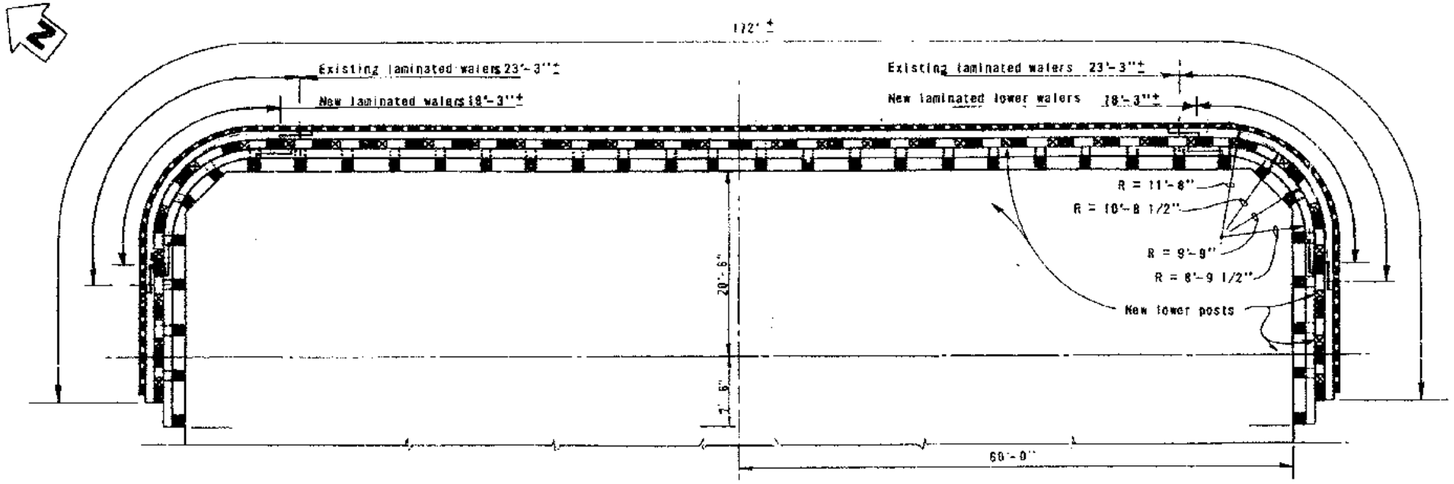

PLAN

Scale: 1/8" = 1'-0"

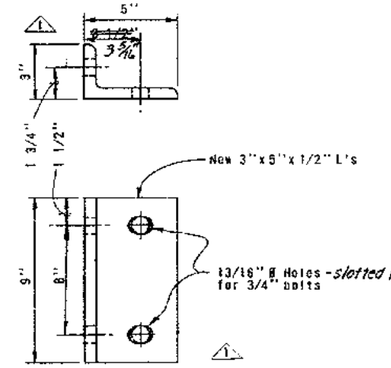

DETAIL 1

Scale: 3" = 1'-0"

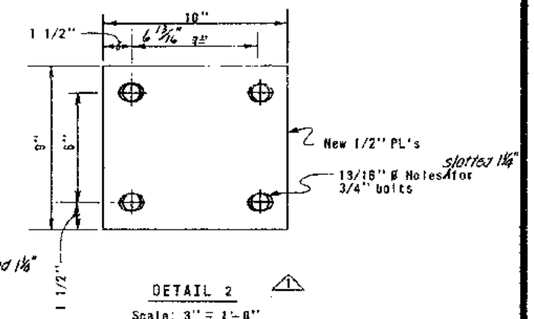

DETAIL 2

Scale: 3" = 1'-0"

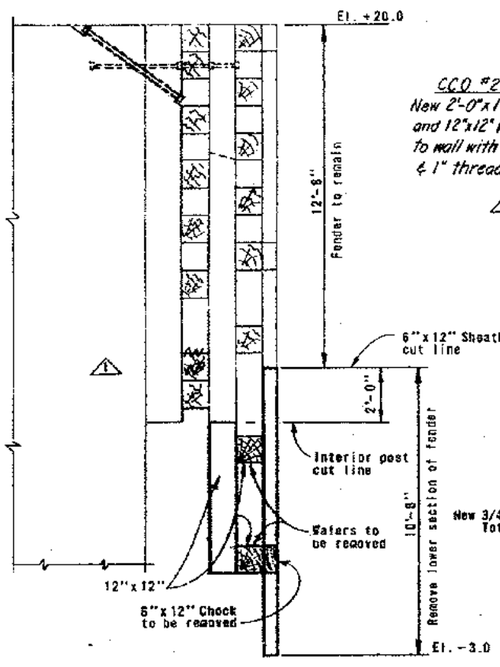

TYPICAL SECTION EXISTING FENDER

Scale: 3/8" = 1'-0"

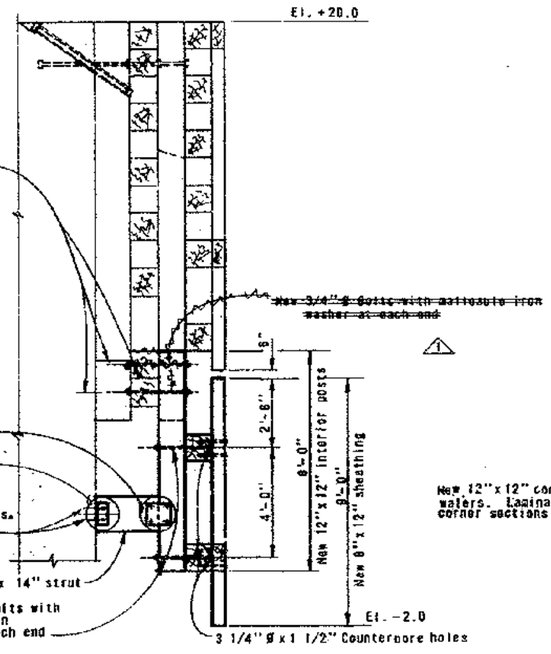

TYPICAL SECTION MODIFIED FENDER

Scale: 3/8" = 1'-0"

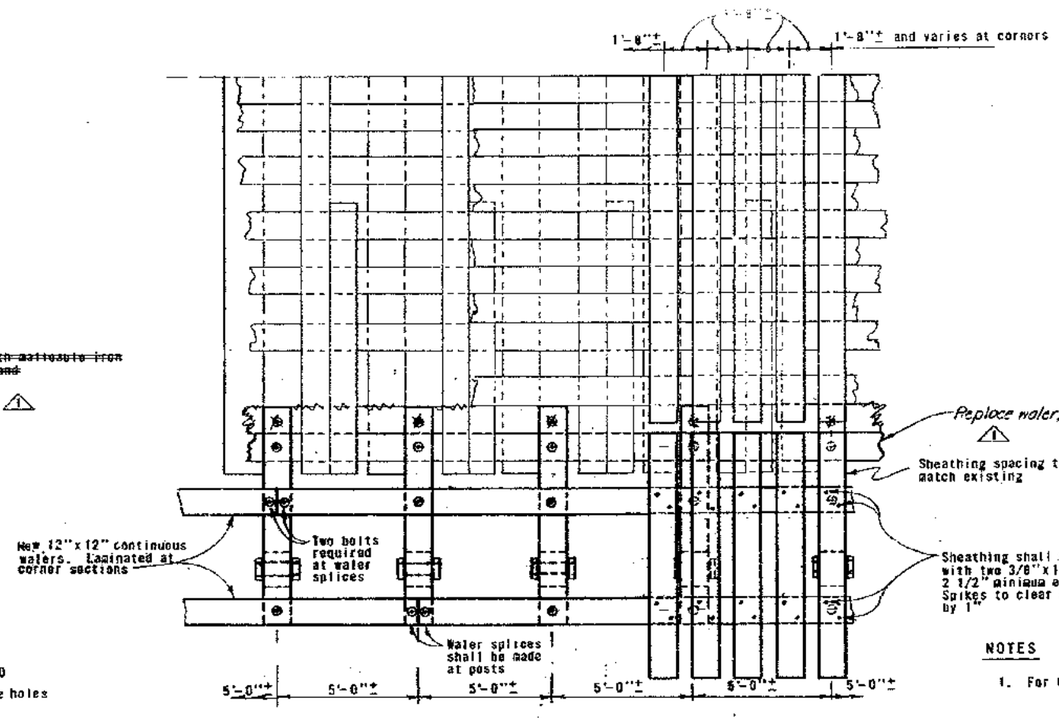

PART ELEVATION

Scale: 3/8" = 1'-0"

Contract No.	04-000474
Date Accepted	9-23-85
As Built	With Revision 1
Resident Engineer	Jim Vallas
Revised By J. Juurma	Date 10-4-85

NOTES

1. For General Notes see sheet 1.

	By	Checked
DESIGN	R. J. Castro	R. Bridwell
DETAILS	R. J. Castro	R. Bridwell
QUANTITIES	R. J. Castro	R.E. Kunz

State of CALIFORNIA DEPARTMENT OF TRANSPORTATION

STRUCTURES - DESIGN

Richard R. Bridwell 17962 — PROJECT ENGINEER — REGISTERED CIVIL ENGINEER NO.

BRIDGE NO. 33-25

POST MILE 8.2 - 8.8

SAN FRANCISCO - OAKLAND BAY BRIDGE - EAST BAY FENDERS

PIER E2 MODIFICATIONS

AS BUILT PLANS
Contract No. 04-000474

ORIGINAL SCALE IN INCHES FOR REDUCED PLANS 0 1 2 3

CU 04 205
WO 000471

Disregard prints bearing earlier revision dates

REVISION DATES (PRELIMINARY STAGE ONLY)

SHEET 2 OF 10

DIST.	COUNTY	ROUTE	POST MILES—TOTAL PROJECT	SHEET NO.	TOTAL SHEETS
04	SF	80	8.2/8.8	3	10

S. Larsen C12732
DESIGN ENGINEER — REGISTERED CIVIL ENGINEER NUMBER
DATE APPROVED July 9, 1984

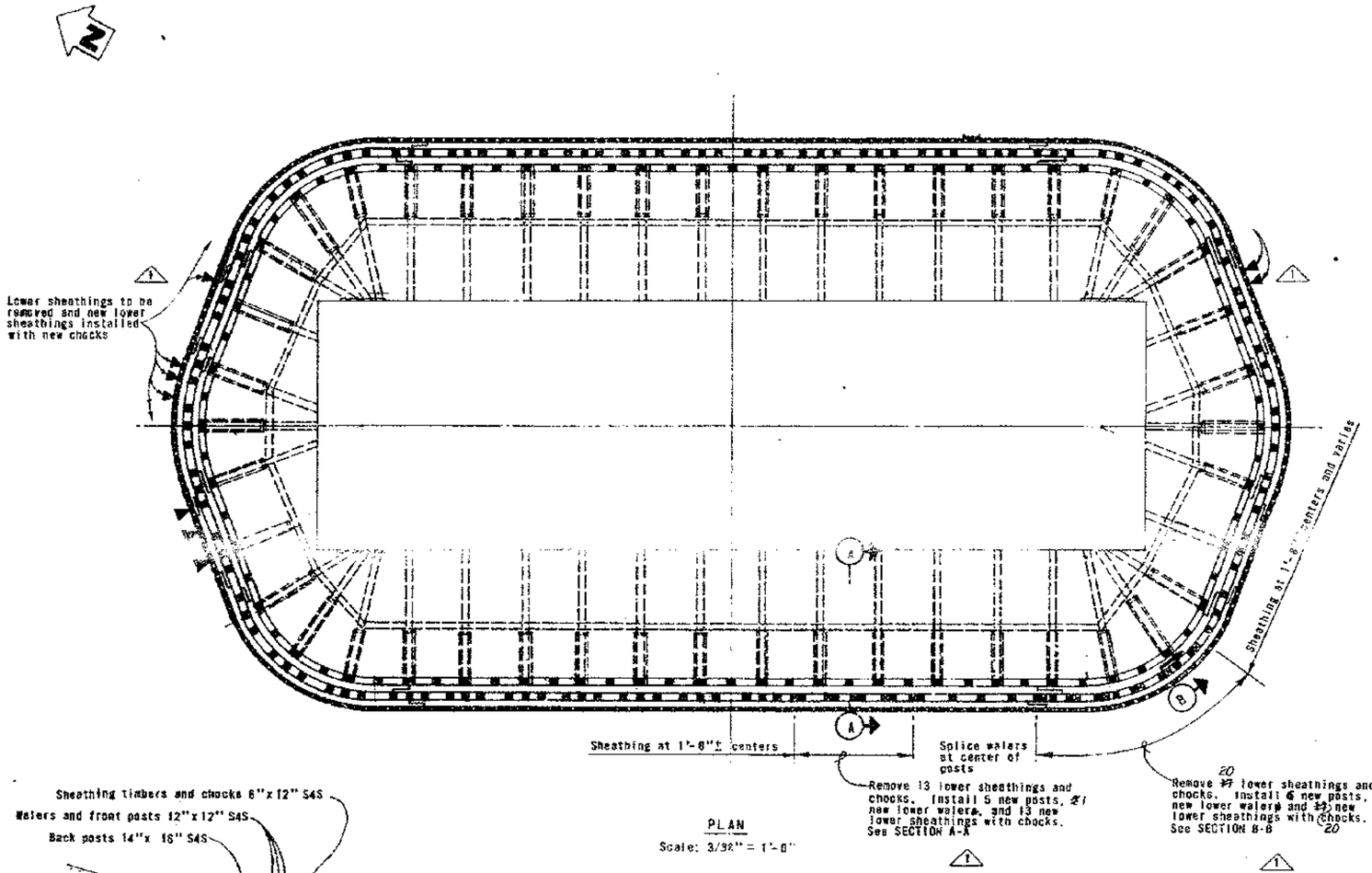

PLAN
Scale: 3/32" = 1'-0"

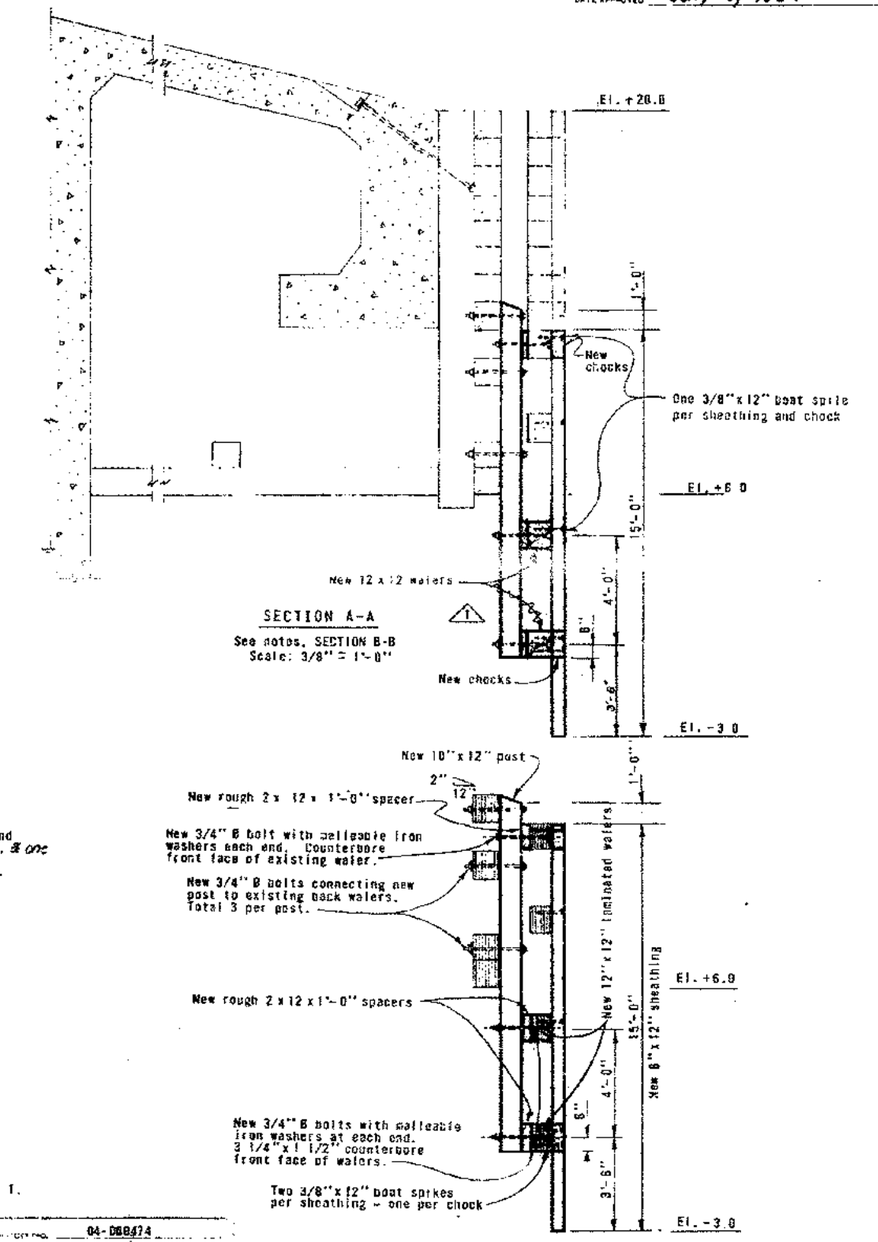

SECTION A-A
See notes, SECTION B-B
Scale: 3/8" = 1'-0"

SECTION B-B
Upper portion not shown - similar to SECTION A-A
Scale: 3/8" = 1'-0"

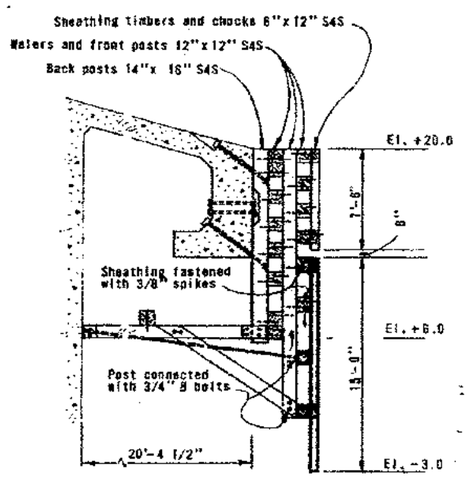

SECTION A-A EXISTING FENDER
Scale: 3/16" = 1'-0"

AS BUILT PLANS
Contract No. 04-000474
Date Completed 9-23-85
Document No.

NOTES

1. For General Notes see sheet 1.

Contract No. 04-000474
Date Accepted 9-23-85
Account With Revisions 1
Assistant Engineer Jim Vallas
Revised By U. Juurma Date 10-4-85

DESIGN	By R. J. Carter	Checked R. Bardwell	State of CALIFORNIA DEPARTMENT OF TRANSPORTATION	STRUCTURES - DESIGN	BRIDGE NO. 33-25
DETAILS	By R. J. Carter	Checked R. Bardwell		Robert R. Bardwell 17862 PROJECT ENGINEER REGISTERED CIVIL ENGINEER NO.	POST MILE 8.2 - 8.8
QUANTITIES	By R. J. Carter	Checked R.E. Keim			

SAN FRANCISCO - OAKLAND BAY BRIDGE - EAST BAY FENDERS

PIER E3 MODIFICATIONS

ORIGINAL SCALE IN INCHES FOR REDUCED PLANS 0 1 2 3

CU 04-205
WO 800471

Discarded prints bearing earlier revision dates

REVISION DATES (PRELIMINARY STAGE ONLY)

SHEET 3 OF 10

DIST.	COUNTY	ROUTE	POST MILES—TOTAL PROJECT	SHEET NO.	TOTAL SHEETS
04	SF	80	8.2/8.8	4	10

DESIGN ENGINEER S. Larsen REGISTERED CIVIL ENGINEER NUMBER C12732

DATE APPROVED July 9, 1984

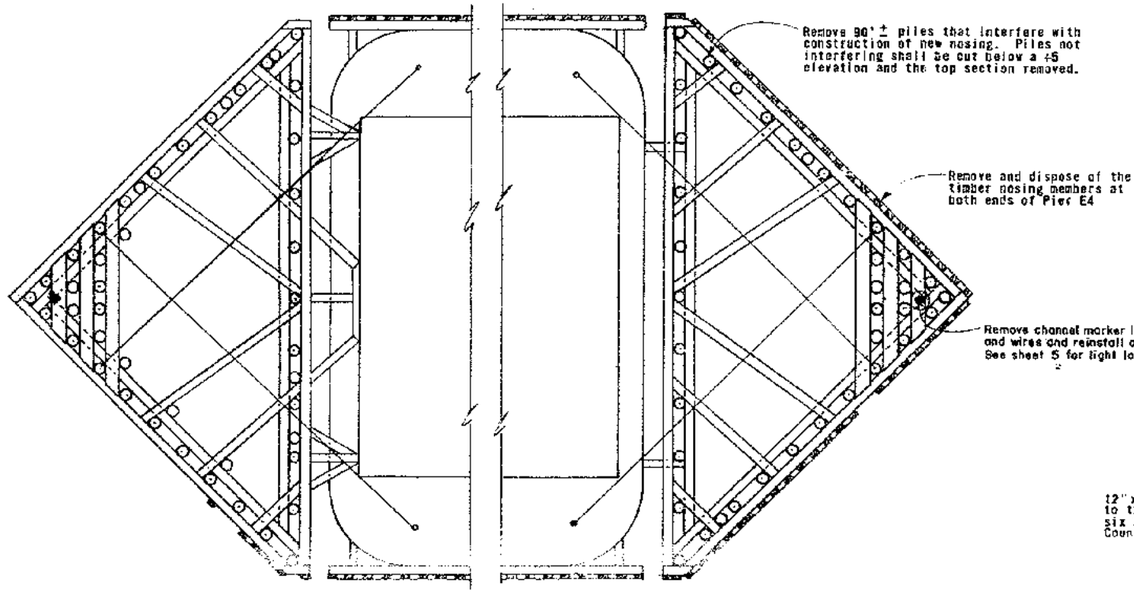

PART PLAN E4 FENDER

Scale: 1/8" = 1'-0"

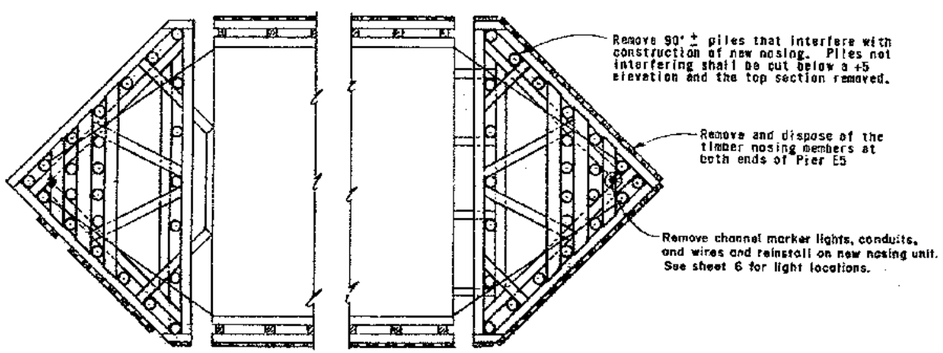

PART PLAN E5 FENDER

Scale: 1/8" = 1'-0"

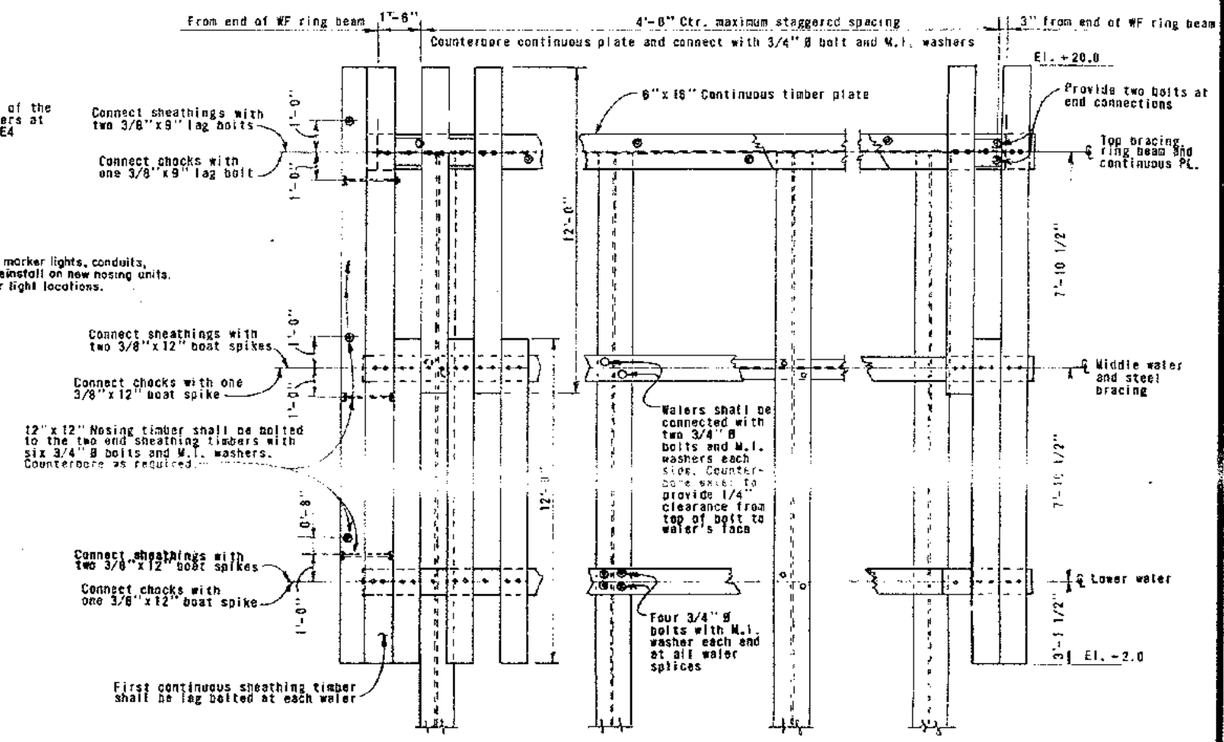

PART ELEVATION - FENDERS NOSING AT PIERS E4 AND E5

Timber connection details
Scale: 3/8" = 1'-0"

NOTES

1. For General Notes see sheet 1.
2. For Nosing at Piers E4 and E5 see sheets 5 and 8.

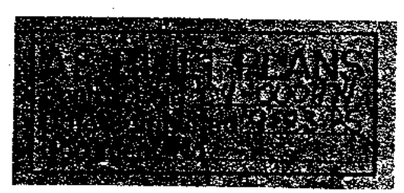

Contract No.	04-000474
Date Accepted	9-23-85
As Built	Without Revision
Resident Engineer	Jim Vallas
Revisions By	U. Journa Date 10-4-85

	By	Checked
DESIGN	R. J. Carter	R. Bridwell
DETAILS	R. J. Carter	R. Bridwell
QUANTITIES	R. J. Carter	R. E. Keim

State of CALIFORNIA DEPARTMENT OF TRANSPORTATION

STRUCTURES - DESIGN

Robert R. Bridwell 17952
PROJECT ENGINEER REGISTERED CIVIL ENGINEER NO.

BRIDGE NO. 33-25

POST MILES 8.2 - 8.8

SAN FRANCISCO - OAKLAND BAY BRIDGE - EAST BAY FENDERS

PIERS E4 AND E5 NOSING REMOVAL AND TIMBER CONNECTION DETAILS

ORIGINAL SCALE IN INCHES FOR REDUCED PLANS 0 1 2 3

CU 04 205
WO 000471

Disregard prints bearing earlier revision dates

REVISION DATES (PRELIMINARY STAGE ONLY) 1/5/84

SHEET 4 OF 10

DIST.	COUNTY	ROUTE	POST MILES—TOTAL PROJECT	SHEET NO.	TOTAL SHEETS
04	SF	80	8.2/8.8	5	10

S. Larsen C12732
DESIGN ENGINEER REGISTERED CIVIL ENGINEER NUMBER
DATE APPROVED July 9, 1984

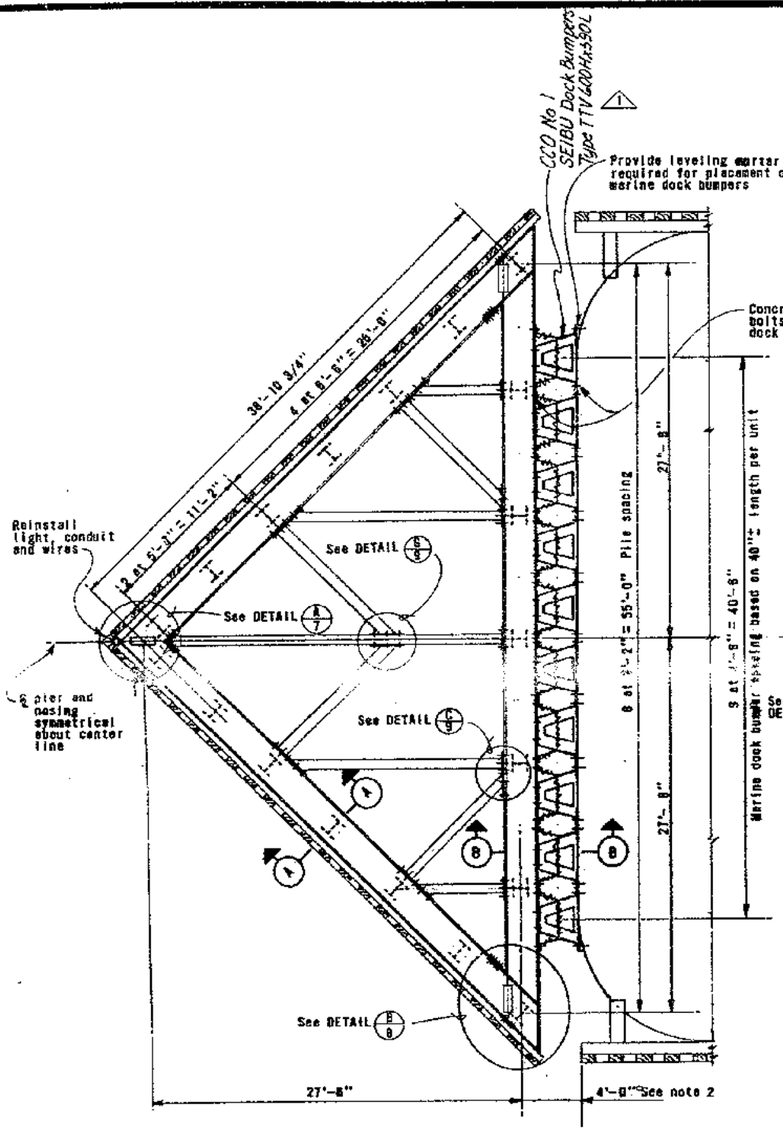

TOP - PLAN (Elev. +20.0)
Scale: 3/16" = 1'-0"

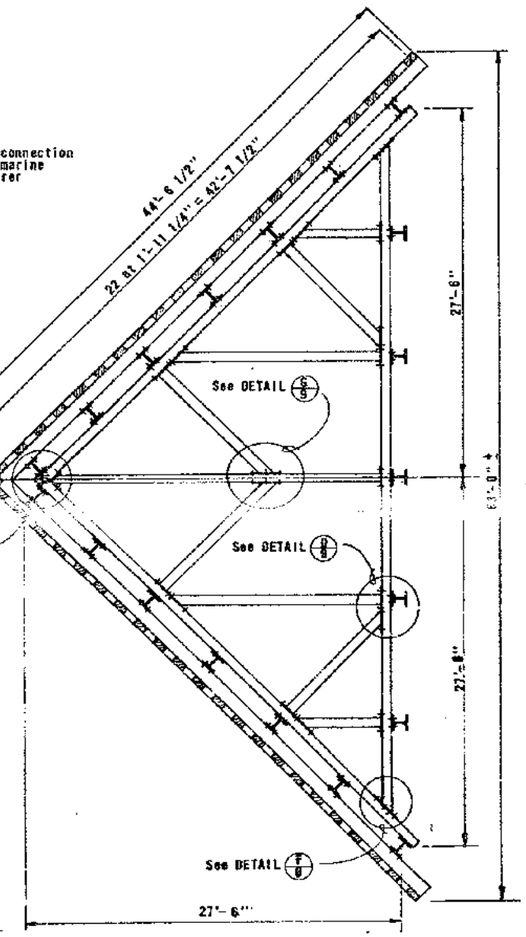

PLAN SECTION
Scale: 3/16" = 1'-0"

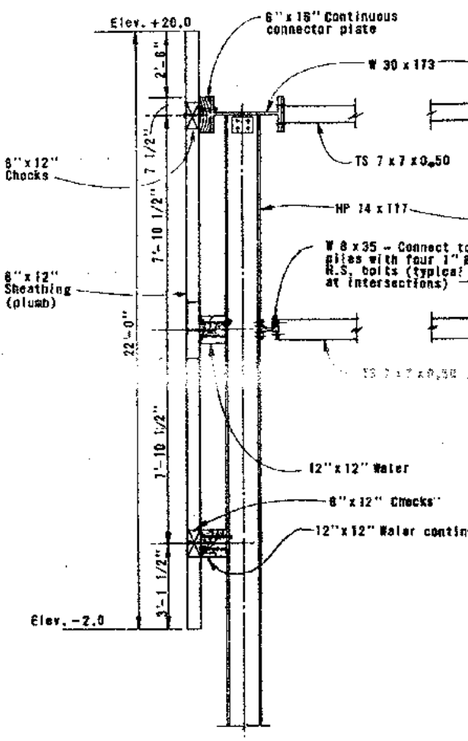

SECTION A-A
Scale: 3/8" = 1'-0"

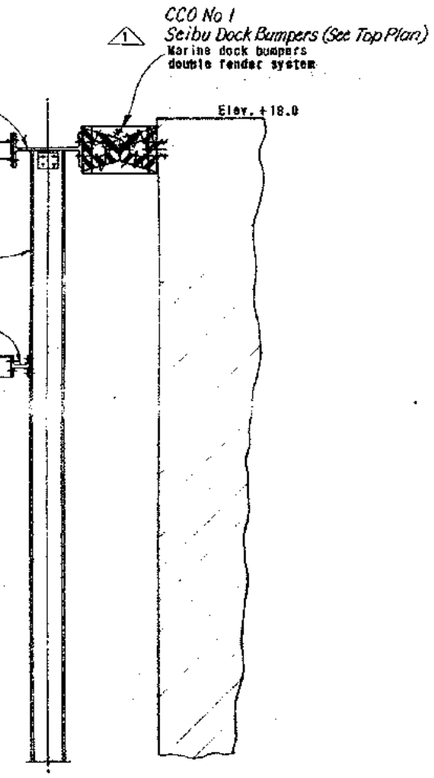

SECTION B-B
Scale: 3/8" = 1'-0"

NOTES

1. All material used to construct the nosing shall be new.
2. Dimensions may vary depending upon type of marine dock installed.
3. Pile design load 20 tons with a specified pile length of 90 feet.
4. For nosing removal layouts and new nosing timber connection details, see sheet 4.
5. For General Notes see sheet 1.

Contract No. 04-000474
Date Accepted 9-23-85
As Built With Revisions
Resident Engineer Jim Vallas
Prepared By U. Juurma Date 10-7-1

[redacted]

DESIGN	By R. J. Carter	Checked R. Bridwell	
DETAILS	By R. J. Carter	Checked R. Bridwell	
QUANTITIES	By R. J. Carter	Checked R. E. Keim	

State of CALIFORNIA
DEPARTMENT OF TRANSPORTATION

STRUCTURES - DESIGN
Robert A. Bridwell 17962
PROJECT ENGINEER REGISTERED CIVIL ENGINEER NO.

BRIDGE NO. 33-25
POST MILE 8.2-8.8

SAN FRANCISCO - OAKLAND BAY BRIDGE - EAST BAY FENDERS
PIER E4 NOSING LAYOUT

ORIGINAL SCALE IN INCHES FOR REDUCED PLANS 0 1 2 3

CU 84 205
WO 000471

Disregard prints bearing earlier revision dates

REVISION DATES (PRELIMINARY STAGE ONLY) 4/5/84

SHEET 5 OF 10

DIST.	COUNTY	ROUTE	POST MILES—TOTAL PROJECT	Sheet No.	Total Sheets
04	SF	80	8.2/8.8	6	10

DESIGN ENGINEER S. Larson REGISTERED CIVIL ENGINEER NUMBER C1272

DATE APPROVED July 9, 1984

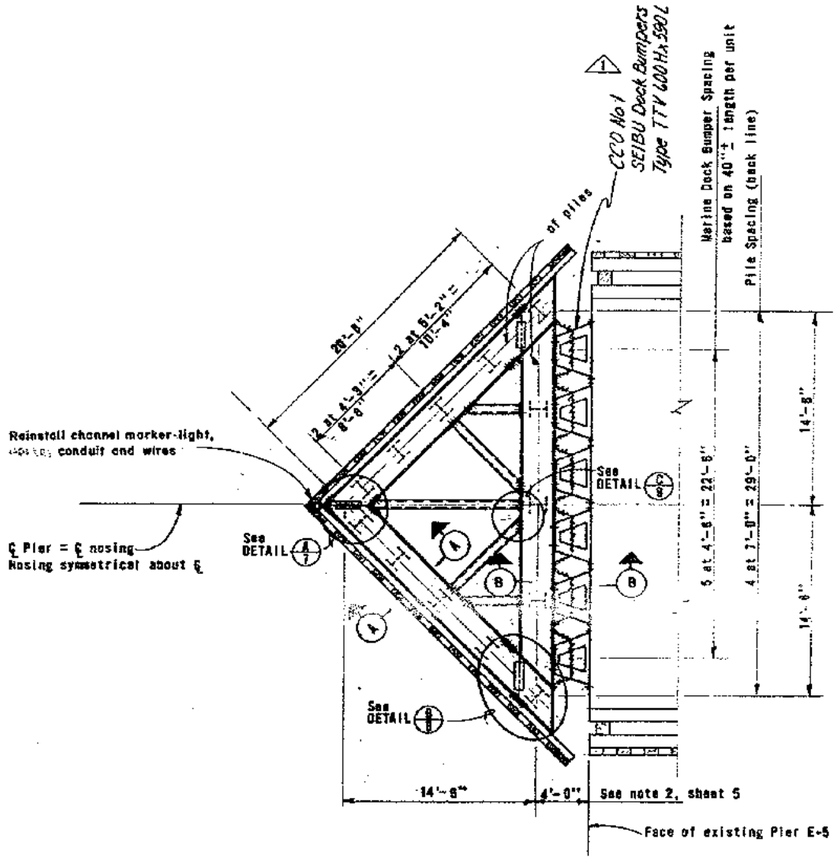

TOP PLAN (Elev. +20.0)
No Scale

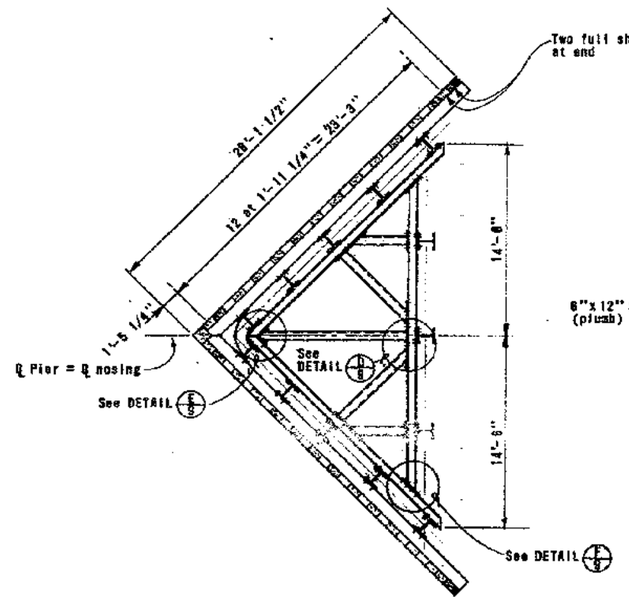

PLAN SECTION (Elev. +10.0)
(Note: Sheathing shown in section below middle waler)
No Scale

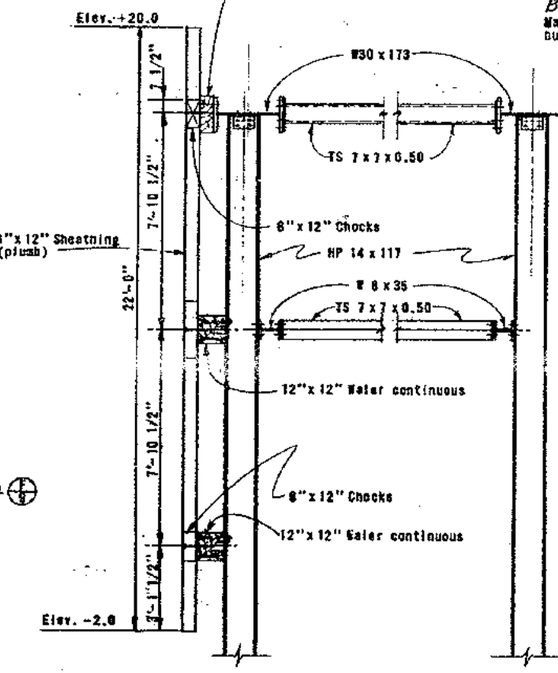

SECTION A-A
Scale: 3/8" = 1'-0"

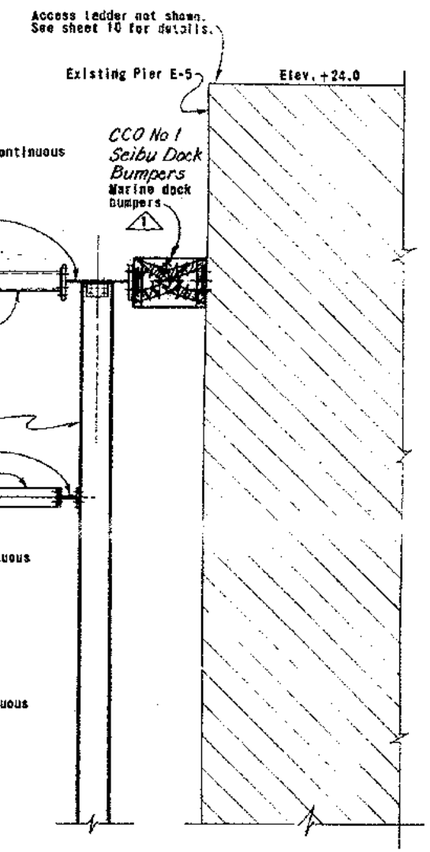

SECTION B-B
Scale: 3/8" = 1'-0"

NOTES

1. For additional details and notes not shown see Pier E4 Nosing Layout sheet 5.
2. For General Notes see sheet 1.

Contract No. 04-000474
Date Accepted 8-23-85
As Built With Revisions
Resident Engineer Jim Vallas
Revision By U. Jurma Date 10-7-85

DESIGN	R. J. Cantos	Checked R. Bridwell	
DETAILS	R. E. Keim	Checked R. Bridwell	
QUANTITIES	R. J. Cantos	Checked R. E. Keim	

State of CALIFORNIA DEPARTMENT OF TRANSPORTATION

STRUCTURES - DESIGN
Robert R. Bridwell 17942
PROJECT ENGINEER REGISTERED CIVIL ENGINEER NO.

BRIDGE NO. 33-25
POST MILE 8.2-8.8

SAN FRANCISCO - OAKLAND BAY BRIDGE - EAST BAY FENDERS

PIER E-5 NOSING LAYOUT

ORIGINAL SCALE IN INCHES FOR REDUCED PLANS 0 1 2 3

CU 84-285
WO 886471

Disregard prints bearing earlier revision dates

REVISION DATES (PRELIMINARY STAGE ONLY)

SHEET 6 OF 10

DIST.	COUNTY	ROUTE	POST MILES—TOTAL PROJECT	SHEET NO.	TOTAL SHEETS
04	SF	80	8.2/8.8	7	10

DESIGN ENGINEER S. Larsen REGISTERED CIVIL ENGINEER NUMBER C12752

DATE APPROVED July 9, 1984

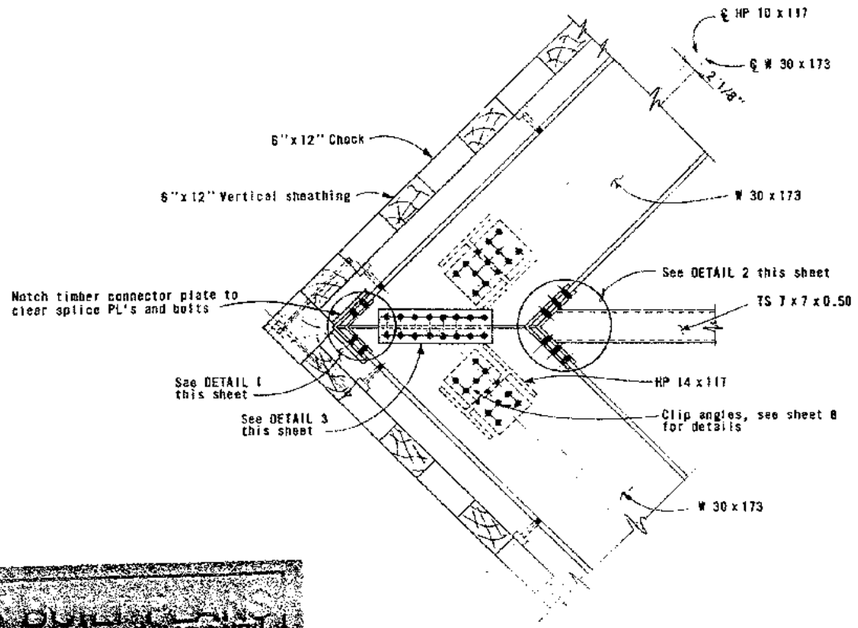

CONNECTION A

Scale: 3/4" = 1'-0"

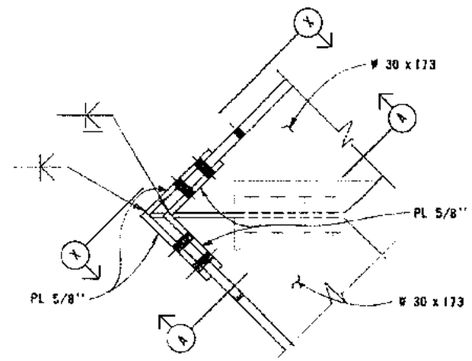

DETAIL 1

Scale: 1 1/2" = 1'-0"

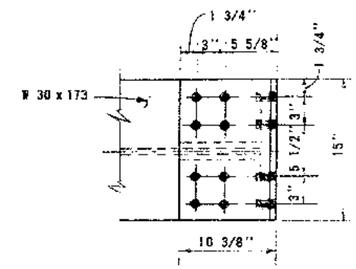

SECTION X-X

Scale: 1 1/2" = 1'-0"

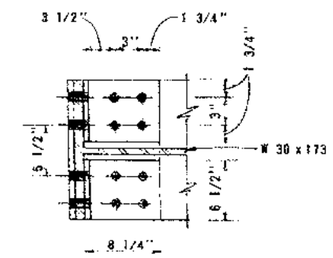

SECTION A-A

Scale: 1 1/2" = 1'-0"

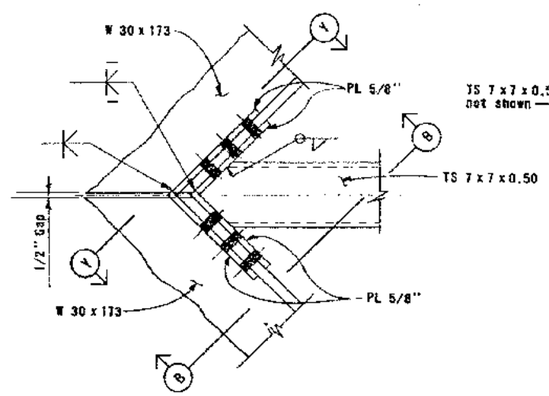

DETAIL 2

Scale: 1 1/2" = 1'-0"

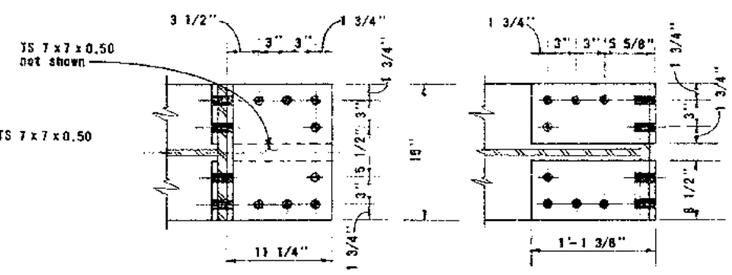

SECTION B-B

Scale: 1 1/2" = 1'-0"

SECTION Y-Y

Scale: 1 1/2" = 1'-0"

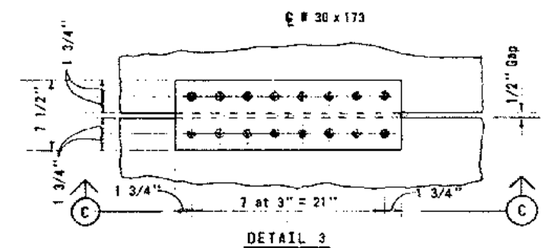

DETAIL 3

Scale: 1 1/2" = 1'-0"

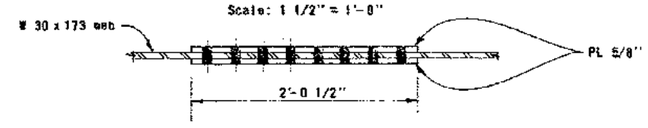

SECTION C-C

Scale: 1 1/2" = 1'-0"

Contract No. 04-000474
Date Accepted 9-23-85
Exhibit Without Revision
Project Engineer Jim Vallas
Revision By U. Juurma Date 10-4-85

DESIGN	By R. J. Carter	Checked R. Bridwell	State of CALIFORNIA DEPARTMENT OF TRANSPORTATION	STRUCTURES - DESIGN	BRIDGE NO. 32-25
DETAILS	By R. J. Carter	Checked R. Bridwell		Robert R. Bridwell 17962 PROJECT ENGINEER REGISTERED CIVIL ENGINEER NO.	POST MILE 8.2-8.8
QUANTITIES	By R. J. Carter	Checked R. E. Keiner			

SAN FRANCISCO - OAKLAND BAY BRIDGE - EAST BAY FENDERS

CONNECTION DETAILS - I

ORIGINAL SCALE IN INCHES FOR REDUCED PLANS 0 1 2 3

CU 04 205
WO 000471

Disregard prints bearing earlier revision dates

REVISION DATES (PRELIMINARY STAGE ONLY)

SHEET 7 OF 10

DIST.	COUNTY	ROUTE	POST MILES—TOTAL PROJECT	SHEET NO.	TOTAL SHEETS
04	SF	80	8.2/8.8	8	10

S. Curson C12732
DESIGN ENGINEER REGISTERED CIVIL ENGINEER NUMBER
DATE APPROVED July 9, 1984

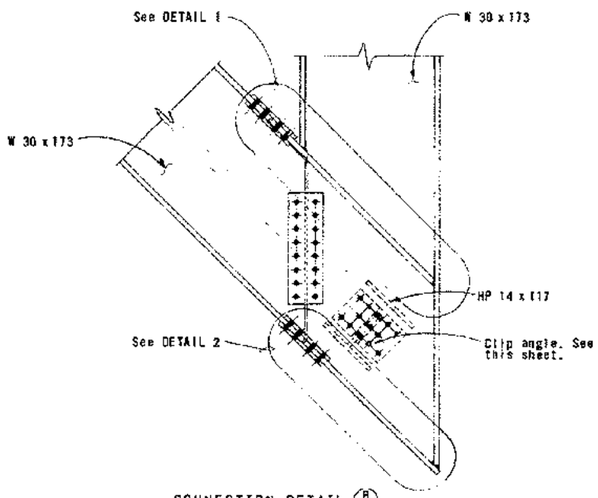

CONNECTION DETAIL (B)

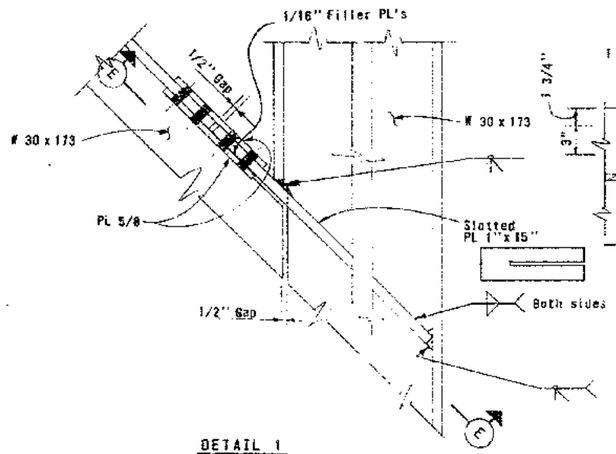

DETAIL 1
Scale: 1 1/2" = 1'-0"

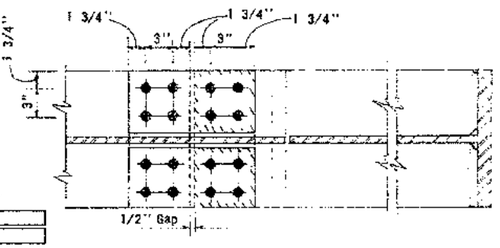

SECTION E-E
Scale: 1 1/2" = 1'-0"

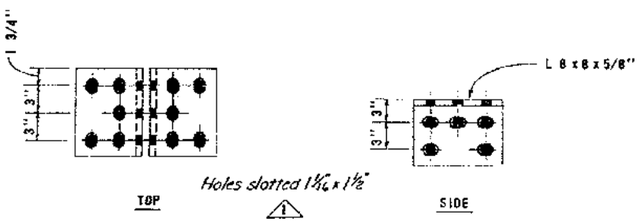

CLIP ANGLE DETAILS
Scale: 1 1/2" = 1'-0"

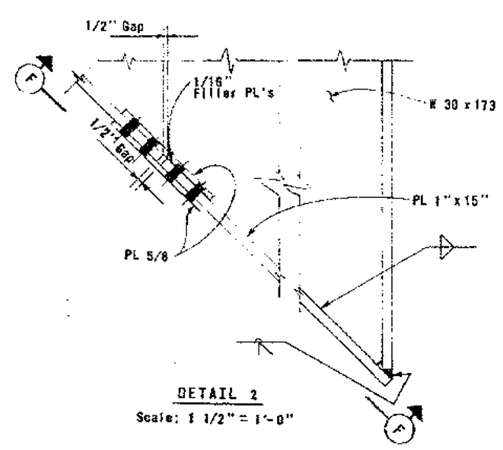

DETAIL 2
Scale: 1 1/2" = 1'-0"

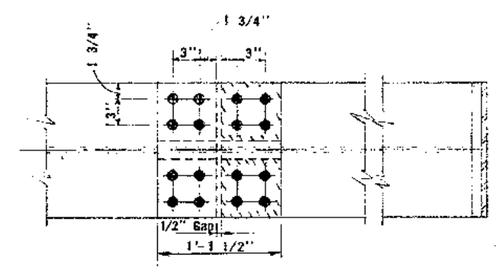

SECTION F-F
Scale: 1 1/2" = 1'-0"

Contract No. 04-000474
Date Accepted 9-23-85
As Built With Revision 1
Revised Engineer Jim Vallas
Revised By U. Juurma Date 10-4-85

DESIGN	By R. J. Carter	Checked R. Bridwell	State of CALIFORNIA DEPARTMENT OF TRANSPORTATION	STRUCTURES - DESIGN	BRIDGE NO. 32-25
DETAILS	By R. J. Carter	Checked R. Bridwell			POST MILE 8.2-8.8
QUANTITIES	By R. J. Carter	Checked K.E. Keim		PROJECT ENGINEER REGISTERED CIVIL ENGINEER NO.	

SAN FRANCISCO - OAKLAND BAY BRIDGE - EAST BAY FENDERS

CONNECTION DETAILS - II

ORIGINAL SCALE IN INCHES FOR REDUCED PLANS 0 1 2 3

CU 04-205
WO 000471

Disregard prints bearing earlier revision dates

REVISION DATES (PRELIMINARY STAGE ONLY)

SHEET 8 OF 10

DIST.	COUNTY	ROUTE	POST MILES—TOTAL PROJECT	SHEET NO.	TOTAL SHEETS
04	SF	80	8.2/8.8	9	10

DESIGN ENGINEER C12732 REGISTERED CIVIL ENGINEER NUMBER

DATE APPROVED July 9, 1984

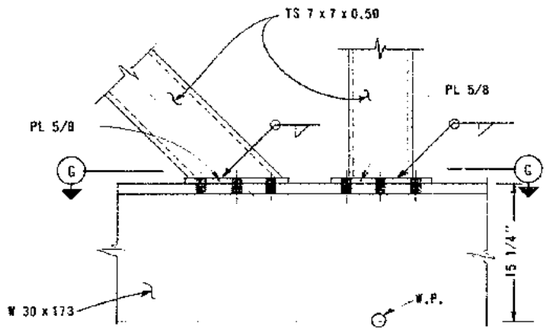

CONNECTION DETAIL C

Scale: 1 1/2" = 1'-0"

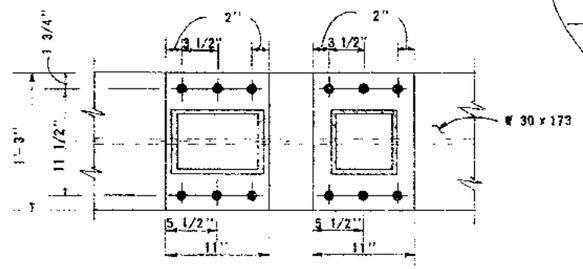

SECTION G-G

Scale: 1 1/2" = 1'-0"

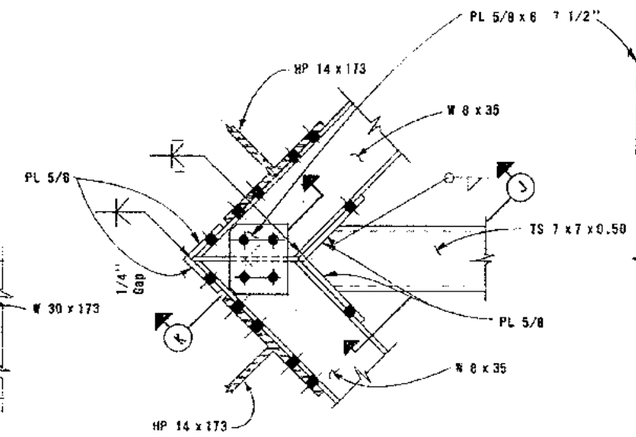

CONNECTION DETAIL E

Scale: 1 1/2" = 1'-0"

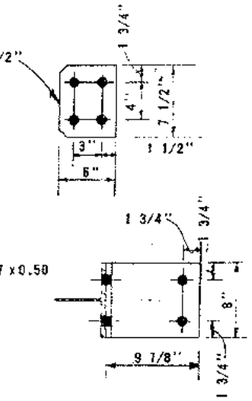

SECTION J-J

Scale: 1 1/2" = 1'-0"

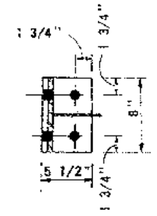

SECTION K-K

Scale: 1 1/2" = 1'-0"

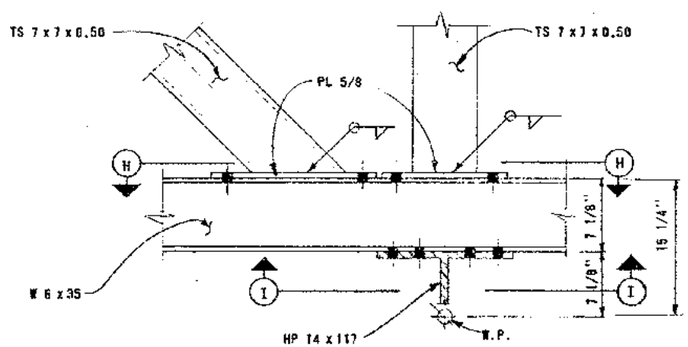

CONNECTION DETAIL D

Scale: 1 1/2" = 1'-0"

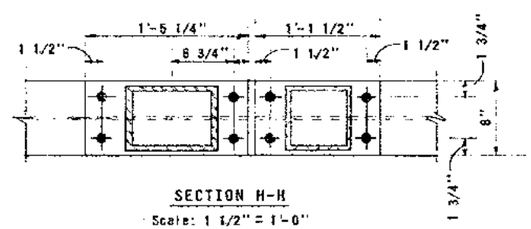

SECTION H-H

Scale: 1 1/2" = 1'-0"

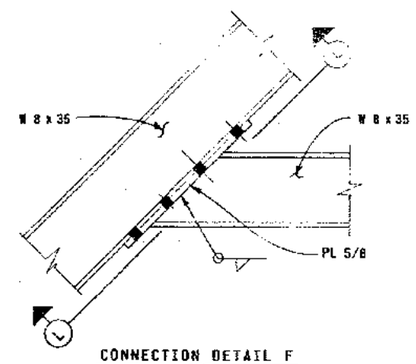

CONNECTION DETAIL F

Scale: 1 1/2" = 1'-0"

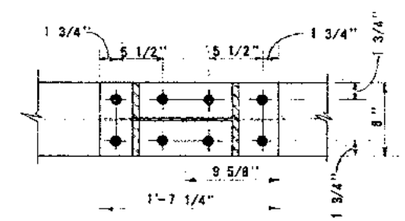

SECTION L-L

Scale: 1 1/2" = 1'-0"

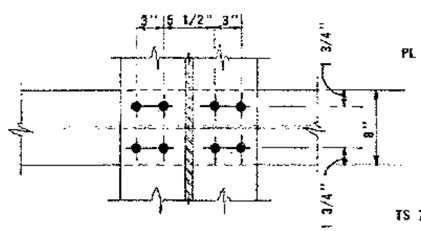

SECTION I-I

Scale: 1 1/2" = 1'-0"

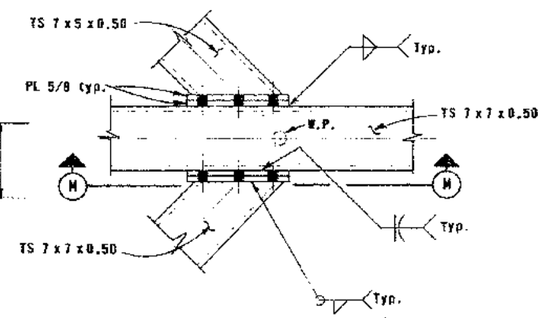

CONNECTION DETAIL G

Scale: 1 1/2" = 1'-0"

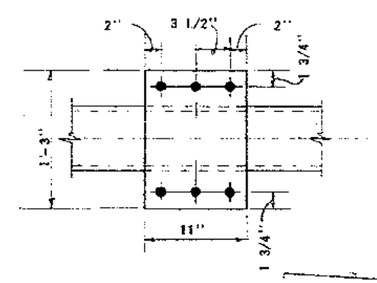

SECTION M-M

Scale: 1 1/2" = 1'-0"

Contract No. 04-000474
Date Accepted 9-23-85
As Built Without Revision
Resident Engineer Jim Valias
Revision By V. Juurma Date 10-4-85

AS BUILT PLANS
Contract No. 04-000474
Date Accepted 9-23-85
Resident Engineer

DESIGN	By R.J. Castro	Checked R. Birdwell	
DETAILS	By R.J. Castro	Checked R. Birdwell	
QUANTITIES	By R.J. Castro	Checked R.E. Kuiper	

State of CALIFORNIA DEPARTMENT OF TRANSPORTATION

STRUCTURES - DESIGN

Robert R. Birdwell 17962
PROJECT ENGINEER REGISTERED CIVIL ENGINEER NO.

BRIDGE NO. 33-25

POST MILE 8.2-8.8

SAN FRANCISCO - OAKLAND BAY BRIDGE - EAST BAY FENDERS

CONNECTION DETAILS - III

ORIGINAL SCALE IN INCHES FOR REDUCED PLANS 0 1 2 3

CU 04 206
WO 000471

Disregard prints bearing earlier revision dates

REVISION DATES (PRELIMINARY STAGE ONLY)

SHEET 9 OF 10

DIST.	COUNTY	ROUTE	POST MILES—TOTAL PROJECT	SHEET NO.	TOTAL SHEETS
04	SF	80	8.2/8.8	10	10

S. Carsen C12732
DESIGN ENGINEER — REGISTERED CIVIL ENGINEER NUMBER
DATE APPROVED July 9, 1984

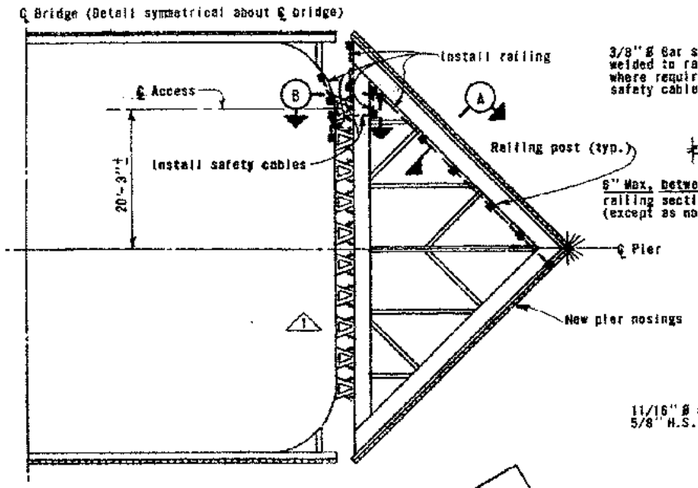

PART PLAN PIER E-4
Scale: 3/32" = 1'-0"

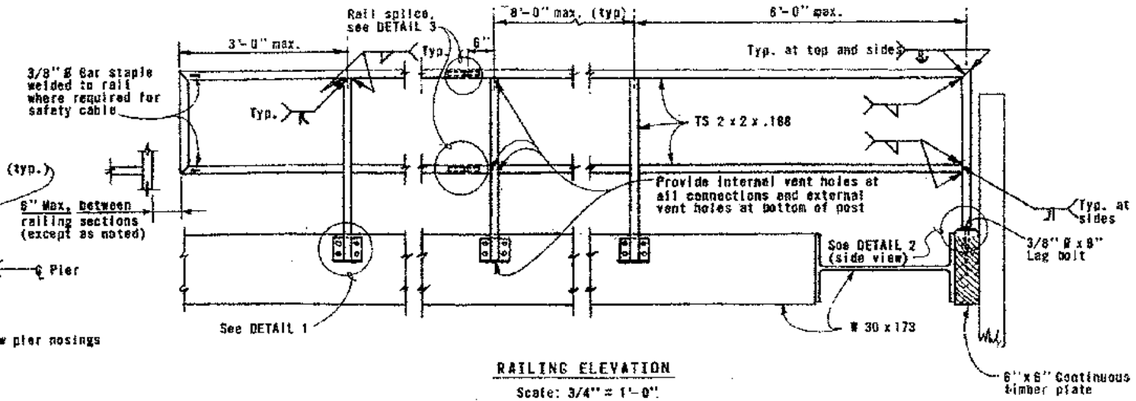

RAILING ELEVATION
Scale: 3/4" = 1'-0"

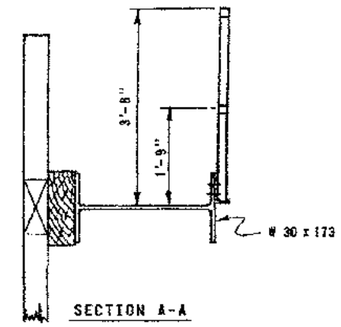

SECTION A-A

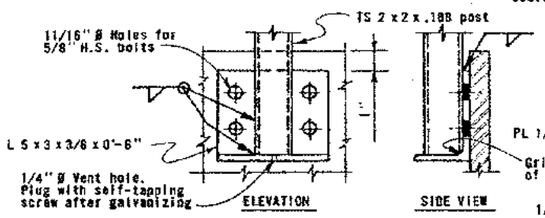

DETAIL 1
(Connection detail of post to W 30 x 173)
Scale: 3" = 1'-0"

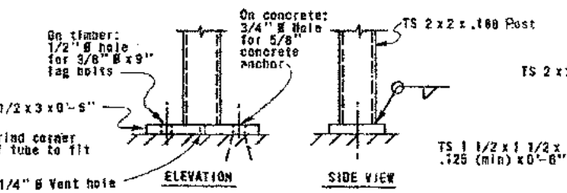

DETAIL 2
(Connection detail of post to timber or concrete)
Scale: 3" = 1'-0"

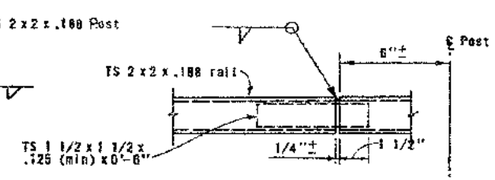

DETAIL 3
(Rail splice optional, but in no case shall a railing section have less than two posts)
Scale: 3" = 1'-0"

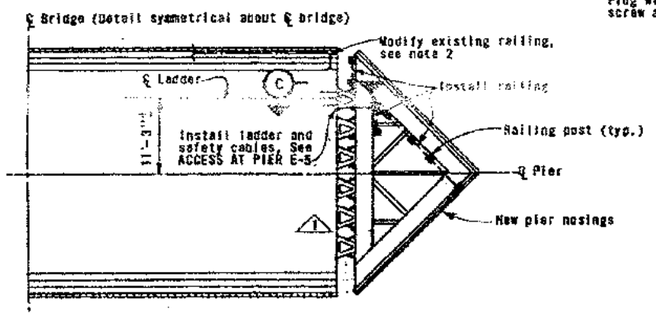

PART PLAN PIER E-5
Scale: 3/32" = 1'-0"

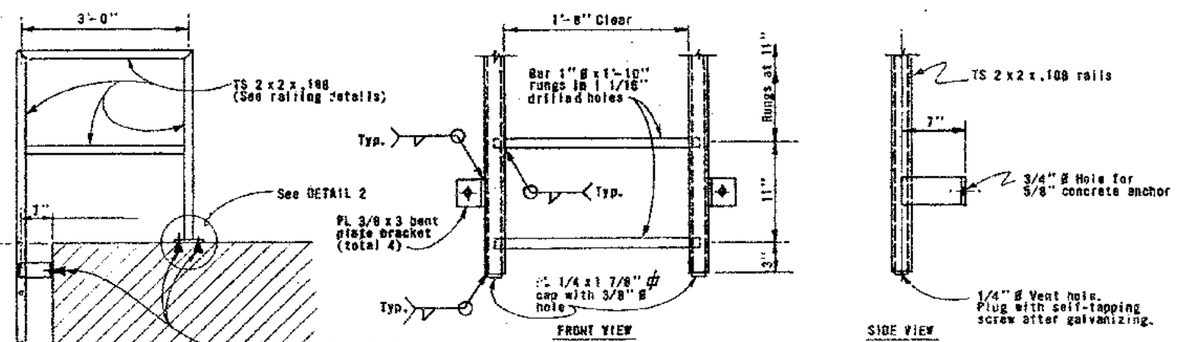

LADDER DETAILS
Scale: 1 1/2" = 1'-0"

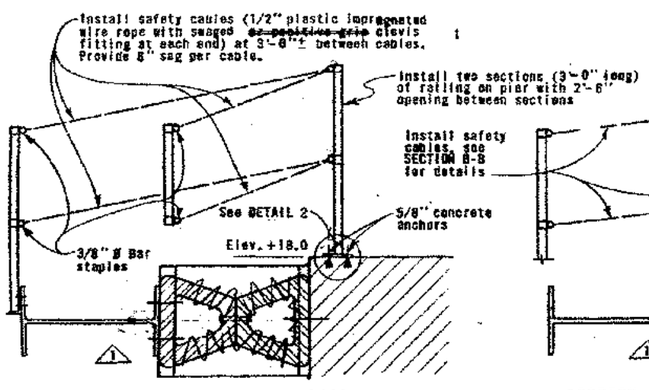

SECTION B-B – ACCESS AT PIER E-4
Scale: 3/4" = 1'-0"

SECTION C-C – ACCESS AT PIER E-5
Scale: 3/4" = 1'-0"

Contract No.	04-000474
Date Accepted	8-23-85
As Built	With Revision 1
Resident Engineer	Jim Vallas
Revision By	W. Juurma Date 10-4-85

NOTES

1. Modify the existing 1 1/2" pipe railing by cutting rails 1'-0" back (toward ℄ bridge) from end of the concrete pier and by installing a new post and new rails. Connect new rails to the side of the concrete pier by installing two wall flanges using two 5/8" concrete anchors per flange. Connect new rails to new post and new post to existing fender timber by using threaded, or slip fit (secured with drive pin, set screw or bolts) malleable iron fittings. Connect the new post (floor flange fitting) to the existing timber fender (waler) with two 3/8" x 9" lag screws.
2. For details and dimensions not shown see MOORING LAYOUT sheets 5 and 6.

	By	Checked
DESIGN	K.E. Keim	R. Bardwell
DETAILS	R.E. Keim	R. Bardwell
QUANTITIES	R. Carsen	R.E. Keim

State of CALIFORNIA DEPARTMENT OF TRANSPORTATION

STRUCTURES - DESIGN
Robert L. Bardwell 17962
PROJECT ENGINEER — REGISTERED CIVIL ENGINEER OR

BRIDGE NO. 33-25
POST MILE 8.2-8.8

SAN FRANCISCO - OAKLAND BAY BRIDGE – EAST BAY FENDERS
PIERS E4 AND E5 RAILING DETAILS

ORIGINAL SCALE IN INCHES FOR REDUCED PLANS 0 1 2 3

CU 06 220
WO 000471

Disregard prints bearing earlier revision dates →

REVISION DATES (PRELIMINARY STAGE ONLY)
4/9/84

SHEET 10 OF 10