DIST.	COUNTY	ROUTE	KILOMETER POST TOTAL PROJECT	SHEET NO.	TOTAL SHEETS
04	CC, Sol	80	22.0/22.7, 0.0/1.8	330	714

Caltrans Metric

Gregory J. Orsolini
REGISTERED ENGINEER - CIVIL

7-12-99
PLANS APPROVAL DATE

The State of California or its officers or agents shall not be responsible for the accuracy or completeness of electronic copies of this plan sheet.

REGISTERED PROFESSIONAL ENGINEER G. L. Orsolini No. 44461 Exp. 3/31/02 CIVIL STATE OF CALIFORNIA

DE LEUW- PAC-STEINMAN
120 Howard Street, Suite 850
San Francisco, CA 94105

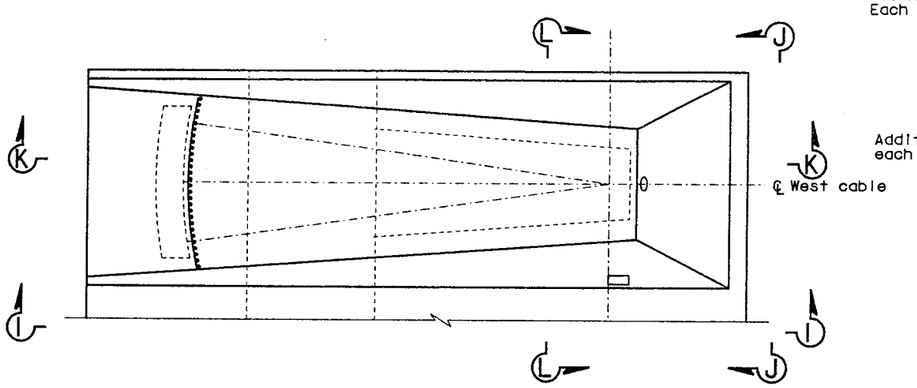

PARTIAL PLAN
1 : 200

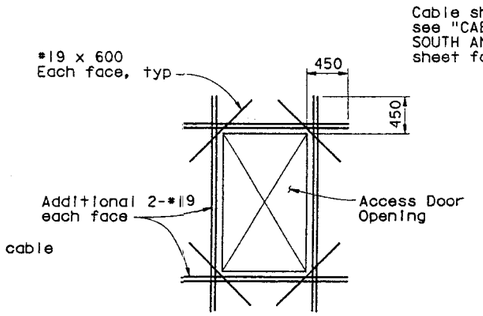

DETAIL 11
No Scale

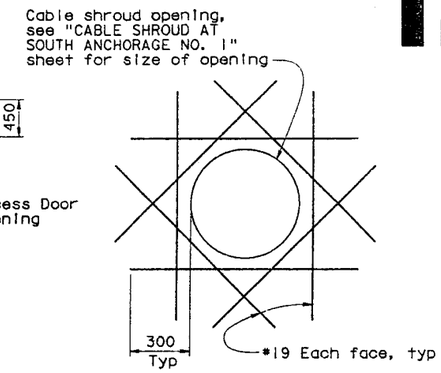

DETAIL 12
No Scale

NOTES:

1. For SECTION K-K & ELEVATION L-L, see "SOUTH ANCHORAGE REINF DETAILS NO. 2" sheet.
2. For DETAILS 1, 6 & 7 see "SOUTH ANCHORAGE REINF DETAILS NO. 2" sheet.

DETAIL 13
1 : 40

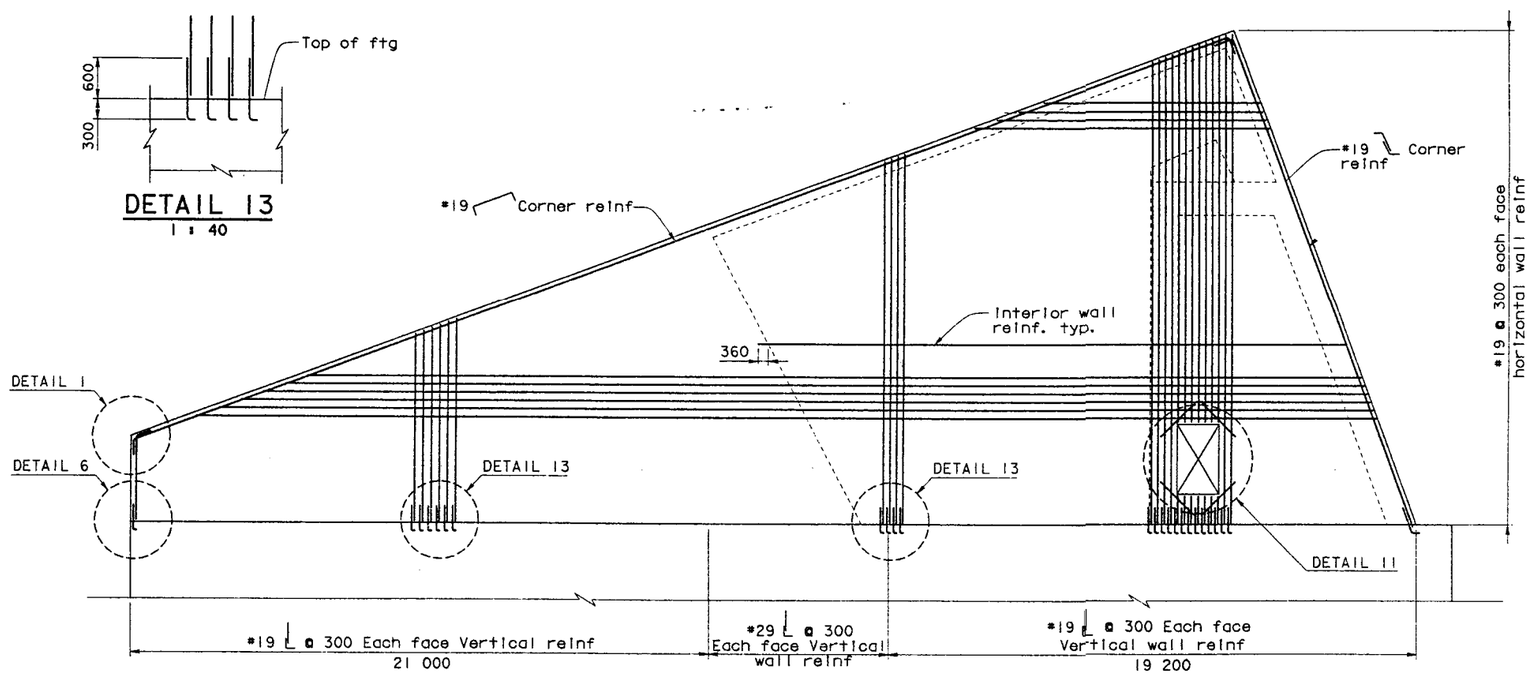

ELEVATION 1-1
1 : 100

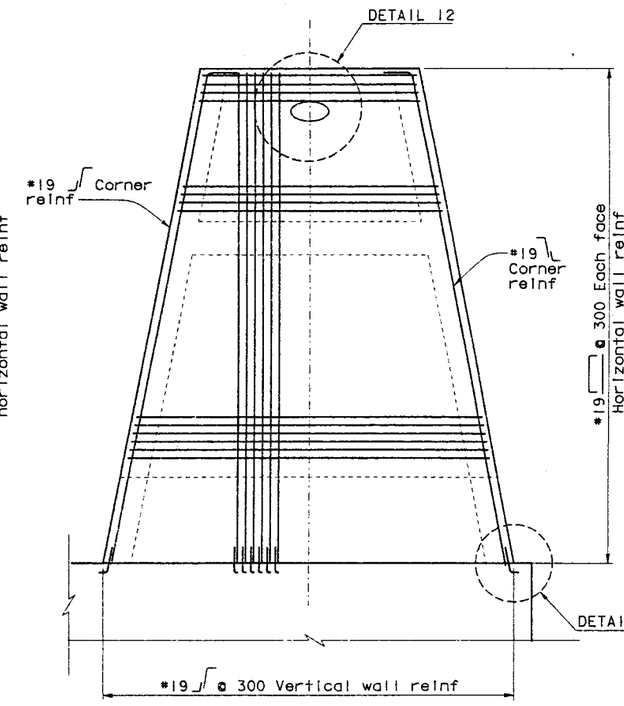

ELEVATION J-J
1 : 100

ALL DIMENSIONS ARE IN MILLIMETERS UNLESS OTHERWISE SHOWN

V. Gastoni DESIGN OVERSIGHT Vincent Gastoni 3/31/99 SIGN OFF DATE Rev. Date 6-2-97	DESIGN	BY R. Chang	CHECKED A. Loof/J. Quincy	PREPARED FOR THE STATE OF CALIFORNIA DEPARTMENT OF TRANSPORTATION	G. Orsolini PROJECT ENGINEER T. Spoth BRIDGE DESIGN MANAGER	BRIDGE NO. 28-0352L KILOMETER POST 0.01
	DETAILS	BY R. Peng	CHECKED A. Loof/J. Quincy			
	QUANTITIES	BY R. Chang	CHECKED A. Loof			

CARQUINEZ BRIDGE & OVERHEAD
SOUTH ANCHORAGE REINF DETAILS NO. 1

ORIGINAL SCALE IN MILLIMETERS FOR REDUCED PLANS 0 10 20 30 40 50 60 70 80 90 100

CU 04
EA 013011

DISREGARD PRINTS BEARING EARLIER REVISION DATES

REVISION DATES (PRELIMINARY STAGE ONLY) 4/28/98 9/18/98 12/18/98 1/8/99 1/13/99 2/16/99

SHEET 96 OF 348

FILE => ett005_20100417

USERNAME => trphils DATE PLOTTED => 20-Jul-1999 TIME PLOTTED => 10:09