CHAPTER 1

INTRODUCTION

CONTENTS

Section		Page
1.1	Purpose	1-2
1.2	General	1-2
1.3	Usage	1-3
1.4	Future Expansion of STRUDL	1-3
1.5	Displacements	1-4
1.6	Axial Deformation	1-4
1.7	Flexural Deformations	1-5
1.8	Torsional Deformations	1-6
1.9	Shearing Deformations	1-8
1.10	Temperature Deformations	1-9
1.11	Coordinate System	1-11
1.12	Global Coordinate System	1-11
1.13	Local Coordinate System	1-12
1.14	Orientation of Local Coordinate System (Beta Angle)	1-13
1.15	Check List of Commands	1-17

1.1 Purpose

This manual was specially prepared for the Bridge Department to supplement the ICES STRUDL Engineers Users Manual. Its main function is to expand the engineer's knowledge of the use of STRUDL. It provides the bridge design engineer with examples which illustrate the problem solving capabilities of STRUDL. Each chapter, presented in order of increasing complexity of structural types, illustrates the application to that type. Because of increasing complexity, each following chapter has certain prerequisite chapters. These prerequisites are noted at the beginning of each chapter. Many of the example problems were presented in a STRUDL course given to Bridge Department engineers in the fall of 1968, by Professors Karl Romstad and Melvin Ramey of the University of California at Davis. The problems are not necessarily about bridge structures, but the techniques of analysis are applicable to them. The problems presented by no means illustrate all the capabilities of the STRUDL system.

STRUDL (STRUctural Design Language) is a computer based information processing system designed to aid the structural engineer in the design process. The STRUDL system introduces two concepts which are new to our bridge engineers. The first concept is the command-structured language used externally by the engineer to describe his problem. The second is the stiffness method of analysis used internally by the program. The frame analysis capability of STRUDL can be used successfully with only an understanding of the command structured language. Familiarity with the stiffness method or matrix methods of structural analysis will enable the user to take advantage of some of the more sophisticated frame analysis capabilities. Should the need arise for these sophisticated capabilities or should the user become interested in structural analysis by matrix methods, he should refer to Appendix A for matrix algebra and Appendix B for an introduction into structural analysis by matrix methods and a list of references.

1.2 General

The STRUDL system is made up of a command-structured language and a set of programmed procedures. The command-structured language has a vocabulary similar to that used by the structural engineer. Thus, he may give instructions to STRUDL in terms that are familiar to him, requiring a minimum knowledge of the internal operations of the computer. The language allows him to control the amount and types of operations performed by the system, thus increasing the efficiency of machine and engineering data handling functions.

STRUDL is able to solve a wide range of engineering problems, but the engineer need not be familiar with the entire system in order to take advantage of any one part of it. Ideally, however, STRUDL is designed to work for him throughout the entire design process. By using the several types of analysis, the capability of storing and saving data, and the capability to add to or change data, the engineer can make optimum use of the STRUDL system. In many cases, however, he may wish to use STRUDL for only one phase of the design, such as indeterminate structural analysis.

1.3 Usage

Engineers familiar with STRUDL must decide whether to analyze a structure with STRUDL or one of the existing structural analysis programs. All structural analysis programs solve problems by using mathematical models of the structure. STRUDL generates a stiffness matrix for its mathematical model. Therefore, as a general rule, since STRUDL uses a generalized approach to structural analysis requiring extra computer time, it is most economical to use the existing programs where possible. STRUDL must be used, however, when the structure cannot be analyzed by the other existing programs.

1.4 Future Expansion of STRUDL

Because STRUDL uses a generalized approach to structural analysis and a command-structural language, it is an open ended system. That is, new commands can be added at any time, thus increasing the power of the system. This is being done continuously by the people who developed STRUDL. Therefore, in STRUDL, the engineer has a large and growing design tool that will prove invaluable to him in his work as a structural designer.

New capabilitites are continuously being added to STRUDL. A recent version of STRUDL has many new features including finite element analysis, dynamic analysis, non linear-analysis and reinforced concrete design checking. The second and third volumes of the ICES STRUDL II Engineering User's Manual cover the use of these capabilities.

Because STRUDL is a continuously changing system, this manual will also have to change periodically in order to keep users informed on new developments and current problem areas. This manual should also serve as a forum for new problem solving techniques developed by Bridge Department design personnel. It is hoped that by doing this, more engineers will be able to use STRUDL more effectively in their design work.

1.5 Displacements

The computed structural joint displacements caused by external forces and moments acting on the structure represent the cumulative effects of all the individual member deformations. The evaluation of these member deformations is dependent upon the cross sectional shape of the member and the mechanical properties of the material.

In general, the four types of member deformations considered in the STRUDL STIFFNESS ANALYSIS are axial, flexural, torsional and shearing deformations. Shearing deformations are considered only when requested by the user. Otherwise, deformations considered in a particular problem depend upon the structural type. For a truss, only axial deformations are considered. Axial, flexural and shearing deformations are utilized in the analysis of a plane frame. For a plane grid member, torsional, bending and shearing deformations are considered. All four deformations are utilized in the analysis of a space frame.

The elemental member deformations and the expressions for the displacements of prismatic members are considered in the following five sections.

1.6 Axial Deformations

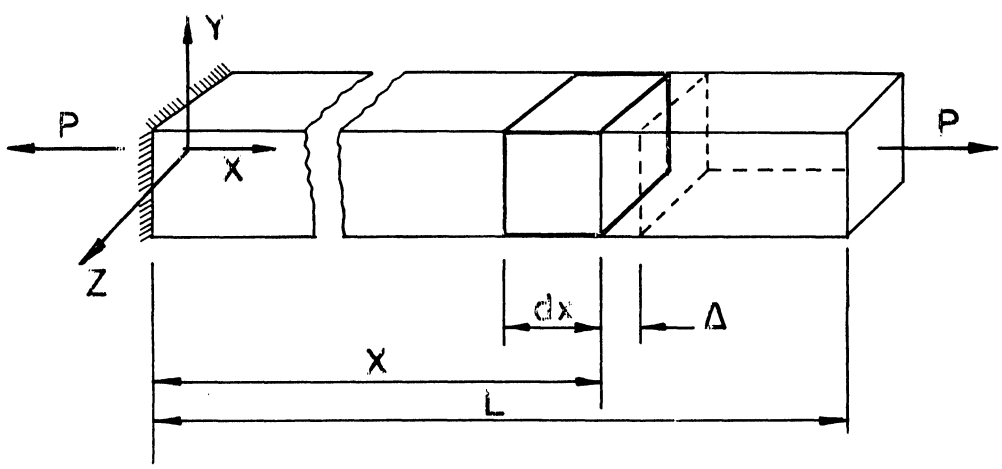

Fig. 1.6a

The member shown above is assumed to be acted upon by a tensile force P at each end of the member, applied at the centroid of the cross sectional area, A_x. The incremental change in length, Δ', may be written in terms of strain, ϵ, as follows:

$$\Delta' = \epsilon \, dx = \frac{P}{EA_x} dx$$

where $\frac{P}{EA_x}$ is an expression for strain using Hooke's Law. E is the elastic constant, Young's Modulus. The total axial deformation is obtained by integrating this value over the length of the member.

$$\Delta = \int_o^L \frac{P}{EA_x}\, dx = \frac{PL}{EA_x}$$

Therefore, the force required to produce a unit deformation in the member is:

$$P = \frac{A_x E}{L}$$

1.7 Flexural Deformations

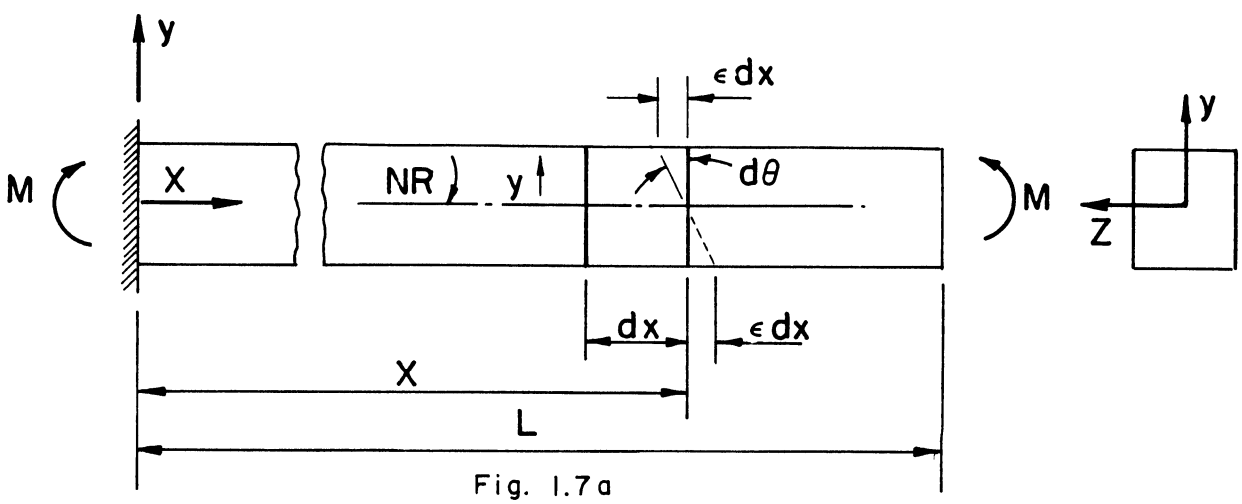

Fig. 1.7a

The member shown above is subjected to a pure bending moment, M. The y and z axes are the principal axes through the centroid of the member. The plane of bending (X-Y plane) contains an axis of symmetry of the member cross section. For small angles of rotation the expression for dθ is:

$$d\theta = \frac{\epsilon\, dx}{y}$$

The strain, ϵ , is defined as follows:

$$\epsilon = \frac{\sigma}{E} = \frac{My}{I_z} \cdot \frac{1}{E}$$

where σ is stress, E is the Young's Modulus, and I_z is the moment of inertia about the z axis.

Substituting for ϵ in the first equation results in

$$d\theta = \frac{M}{EI_z}\,dx$$

Integrating this expression along the total length of the member gives the angle of rotation at the free end for pure bending.

$$\theta = \int d\theta = \int_0^L \frac{M}{EI_z}\,dx = \frac{ML}{EI_z}$$

1.8 Torsional Deformations

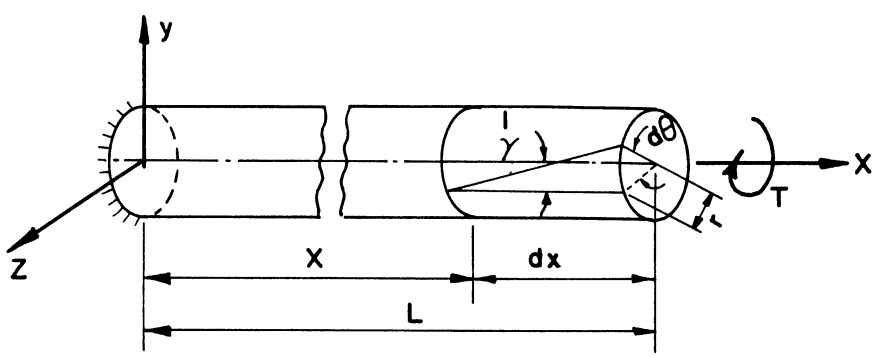

Fig. 1.8a

The circular member shown above is subjected to pure torsion by twisting moments, T, applied at its ends. The relative angle of rotation, $d\theta$, between the ends of an element located a distance X from the fixed end is given by the expression:

$$d\theta = \frac{\gamma\,dx}{r} \qquad (1)$$

in which γ is the shearing strain on the outer surface of the member at a distance, r, from the axis of rotation. The shear strain is equal to the shear stress, τ, divided by the shearing modulus of elasticity, G, of the material.

$$\gamma = \frac{\tau}{G} \qquad (2)$$

The relation between the shearing modulus, G, and the tensile modulus, E, for an ideal elastic material is

$$G = \frac{E}{2\ (1+\mu)} \tag{3}$$

The value of μ (Poissons Ratio) for concrete is commonly taken as 0.18. For a circular section with plane sections normal to the axis of the member remaining plane, the torsional shearing stresses are directly proportional to the distance from the longitudinal axis. This relation is given by the expression:

$$\tau = \frac{Tr}{I_x} \tag{4}$$

Substituting into equation (2) yields,

$$\gamma' = \frac{\tau}{G} = \frac{Tr}{GI_x} \tag{5}$$

The expression for the relative angle of rotation, equation (1), takes the following form when equation (5) is substituted:

$$d\theta = \frac{Tdx}{GI_x} \tag{6}$$

Integrating this expression along the total length of the member gives the total angle of twist at the free end.

$$\theta = \int d\theta = \int_o^L \frac{Tdx}{GI_x} = \frac{TL}{GI_x} \tag{7}$$

I_x is called the torsional rigidity of the member. For circular cross sections the torsional rigidity is equal to the polar moment of inertia.

For non-circular cross sections subjected to torsional deformations the shearing stresses on a plane section <u>do not</u> vary directly as the distance from the center of the section and plane sections no longer remain plane, thus equation 7 is no longer valid. These out-of-plane displacements are called warping.

Applying Saint-Venant's theory which neglects the effect of warping (i.e.; assumes that there are no external constraints which can prevent any cross section plane from warping) we can calculate a torsional constant to relate angular twist to the twisting moment. This relationship can also be expressed by equation 7 using the torsional constant for an approximate torsional rigidity. Having established a torsional rigidity that will provide approximate load deformation relationships we can use STRUDL to analyze interconnected members to obtain the proper interaction between flexural and torsional moments. Torsional rigidities for various sections are tabulated in Appendix C. Calculations of the torsional constants of some typical bridge sections are also included there.

1.9 Shearing Deformations

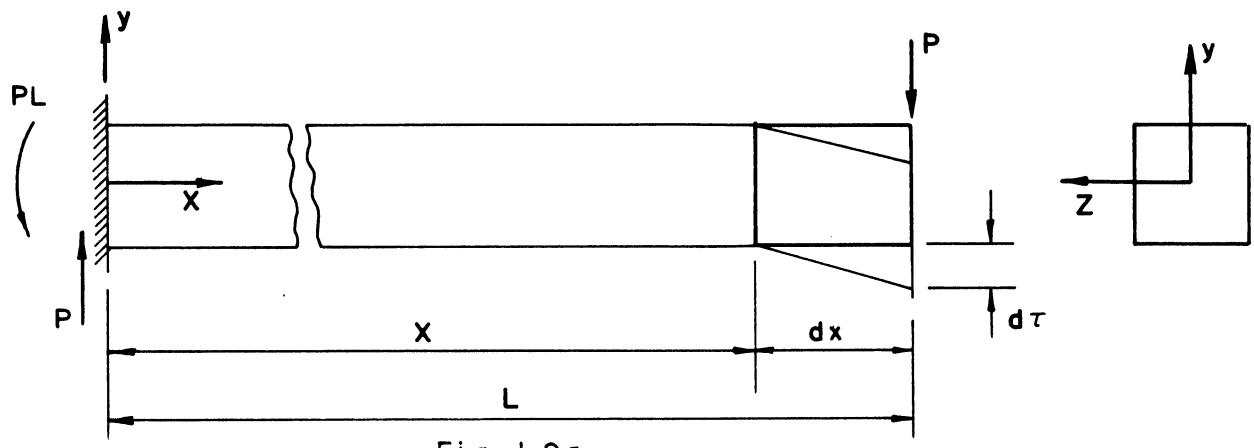

Fig. 1.9a

The cantilevered member shown above is subjected to bending moments and shearing forces.

In this discussion only the deformations caused by the shearing forces will be taken into account. The incremental deformation consists of a relative displacement, $d\tau$, of one side of the element with respect to the other and is given by the following expression:

$$d\tau = \frac{fVdX}{GA_x} = \frac{VdX}{G\,\frac{A_x}{f}}$$

A_x is the area of the cross section and f is a form factor that is dependent upon the shape of the cross section. The quantity A_x/f is referred to as the <u>shearing rigidity</u>. The form factors for several sections are tabulated in Appendix C.

Integrating the above shown expression along the total length of the member gives the total member deformation due solely to the effects of shear.

$$\Delta s = \int d\tau = \frac{P}{\frac{G(A_x)}{f}} \int_o^L dX = \frac{PL}{G} \frac{(A_x)}{f}$$

To consider the shearing deformations of the above shown member in the STRUDL STIFFNESS ANALYSIS, a shearing rigidity in the local y direction is required. For this case the shearing rigidity is AY or A_x/f. The form factor f for a rectangular section is 1.2; thus AY is simply $A_x/1.2$.

For a space frame member shearing deformations in both the local y and z directions are considered if both AY and AZ are used. Usually the effect of these shearing deformations is small compared to the effects of bending deformations and can be neglected; however, if the user desires to include these deformations in the STIFFNESS ANALYSIS, simply enter the corresponding shearing rigidity.

1.10 Temperature Deformations

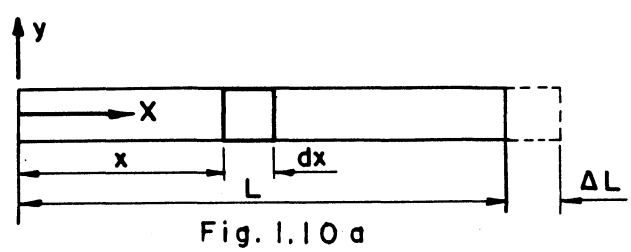

Fig. 1.10 a

The bar shown above is subjected to a uniform increase in temperature along its entire length. The longitudinal deformation of the incremental element is given by:

$$d\Delta L = \alpha(\Delta T)\, dx$$

Where α is the coefficient of thermal expansion and ΔT is the change in temperature. Integrating the above expression along the total length gives the total deformation due to temperature effects.

$$\Delta L = \int_o^L \alpha \ (\Delta T) \ dx = \alpha \ (\Delta T) \ L$$

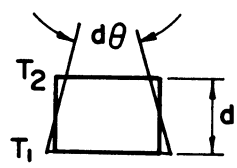

Fig. 1.10 b

The elemental section of a bar shown above is subjected to a uniform temperature differential with temperature, T_1, higher than temperature, T_2. The relative angle of rotation between the sides is given by:

$$d\theta = \frac{\alpha \ (T_1 - T_2) \ dx}{d}$$

Where α is the coefficient of thermal expansion, T_1 is the higher temperture on the bottom side, and T_2 is the lower temperature on the top side of the element. Integrating the above expression along the total length gives the total rotational displacement:

$$\theta = \int d\theta = \int_o^L \frac{\alpha \ (T_1 - T_2) \ dx}{d} = \frac{\alpha \ (T_1 - T_2) \ L}{d}$$

To consider the temperature deformations as shown above in the STRUDL stiffness analysis, member depth, temperature gradient, ΔT , and the coefficient of thermal expansion must be given.

1.11 Coordinate System

Fundamental to the proper usage of the STRUDL Subsystem is a clear understanding of the two coordinate systems used for entering input data and interpreting output results. Both systems use the right handed orthogonal Cartesian coordinate system shown in Figure 1.11a.

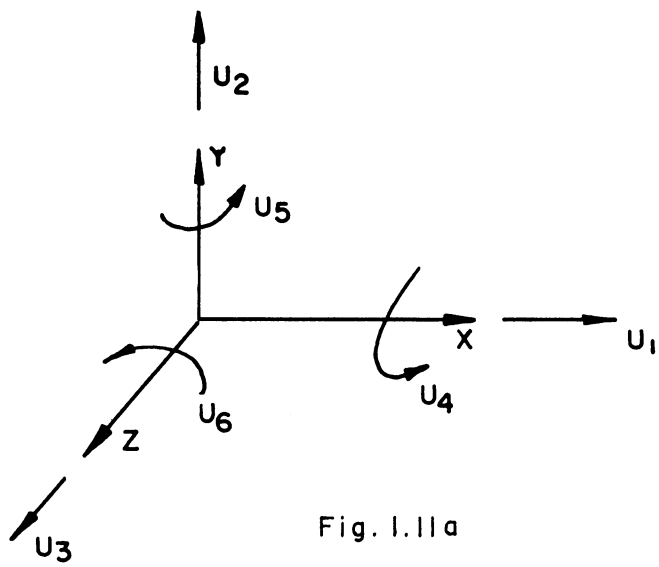

Fig. 1.11a

Positive Force Displacement Direction

The global coordinate system relates to the entire structure and the local coordinate system is associated with each member.

1.12 Global Coordinate System

The global coordinate system is arbitrarily chosen by the user, most conveniently picked so that the directions of the axes coincide with the major dimensions of the structure. Planar structures must lie in one of the planes formed by the axes of the global system. Since the user's selection of a particular global plane can simplify the structural description and interpretation of output results the following structural types are listed with a suggested global plane in the First Quadrant:

Structural Type	Global Plane
1) Plane Truss and Plane Frame	XY
2) Plane Grid	XZ
3) Space Truss and Space Frame	Plan View Parallel to XZ

Figure 1.12a illustrates the use of the global coordinate system.

Note that the plan view of the bridge structure is parallel to the Global XZ plane.

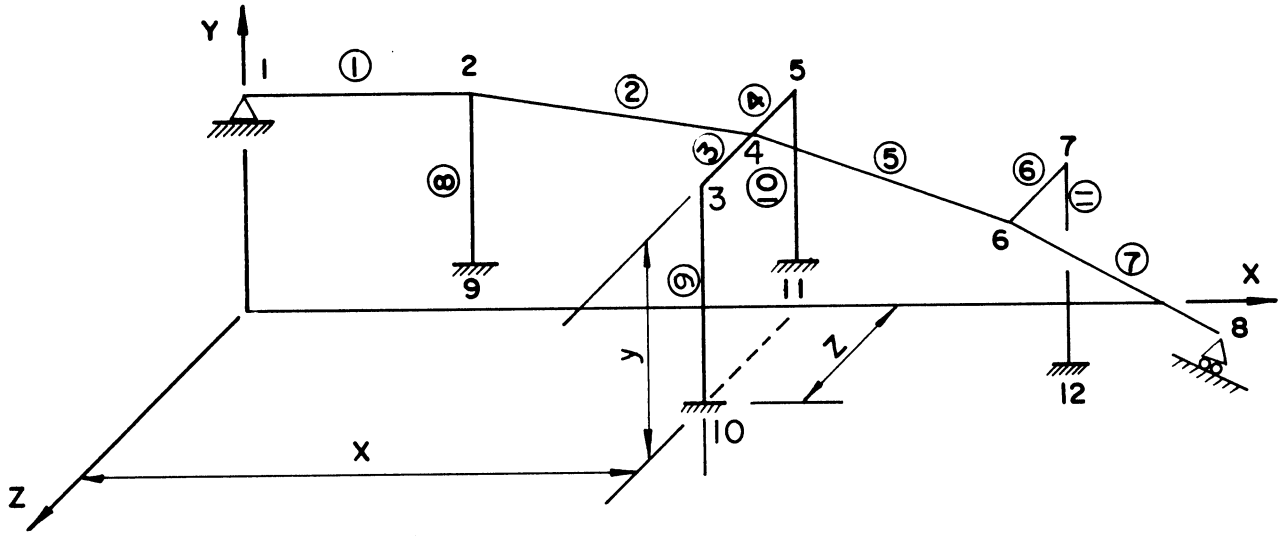

Fig. 1.12 a
Global Coordinate System

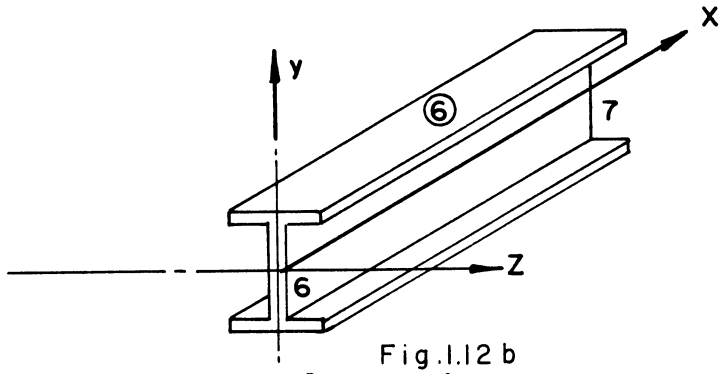

Fig. 1.12 b
Local Coordinate System

1.13 Local Coordinate System

The origin of the local coordinate system for each member is located at the start of the member with the local X axis coincident with the centroidal axis of the member. The local X axis is positive going from the START of the member to the END of the member as defined in the MEMBER INCIDENCES command. The local Y and Z axes coincide with the principal axis of the member cross section. Figure 1.12b illustrates the local coordinate system for cantilevered cap member, member number 6.

The position of cap member 6 in space is defined by the coordinates of joints 6 and 7. The orientation of the principal axes of the member are still undefined. Member 6 is free to rotate about its own local X axis. Assume that member 6 is oriented 45° to the global X-Z plane as shown in Figure 1.13a.

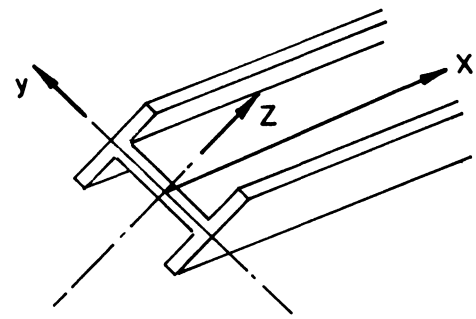

Fig. 1.13 a

1.14 Orientation of Local Coordinate System (Beta Angle)

The orientation of these principal axes must now be defined with respect to the global coordinate system. This is accomplished by defining a pair of reference axes, y' and z' for which BETA = 0, in the plane of the member cross section as shown in Figure 1.13b.

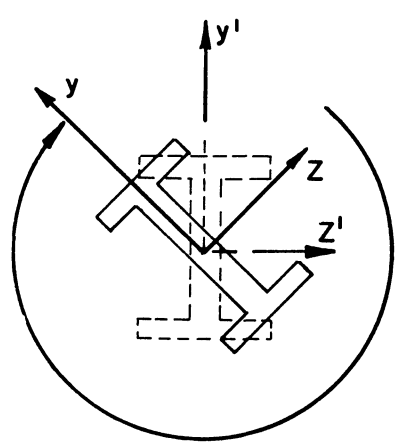

Fig. 1.13 b

The local X axis is pointing away from the reader into the page. The angle BETA is measured, in a positive direction using the right hand rule, from the Y' axis of the reference position, BETA = 0, about the local X axis.

The location of the reference position BETA = 0 is separated into the two following cases depending on the direction of the local X axis with respect to the global Y axis:

Case I - Local X axis parallel to global Y axis

The position of the reference axes (Y' and Z' axes) for this case is established by orienting the local Z' axis in the same direction as the global Z axis for both of the possible directions of local X. The Y' axis is established using the right hand rule as shown in Figure 1.14a.

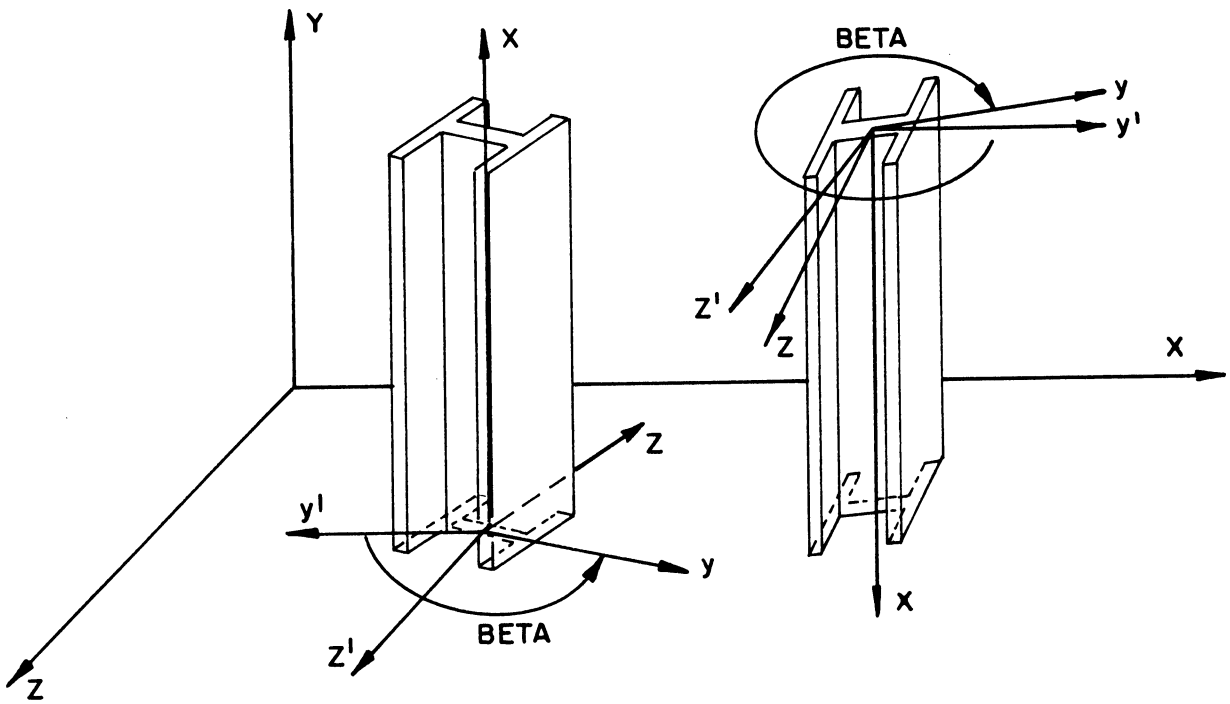

Fig.1.14a

Reference position location of Y' and Z' axis when the local X parallel to global Y.

Having located the reference axis, the BETA angle is measured from the Y' axis to the positive local Y axis in accordance with the right hand rule as shown in the sketch.

Case II - Local X axis not parallel to global Y axis

The reference position for this case, the general case, can be located by using the thought process outlined below. To illustrate this we use cap member 6 as shown in Figure 1.15a. Assuming again that the principal axes of the member are oriented at 45° to the X-Z global axes and also assuming that joint 7 is at a higher elevation than joint 6.

1. Locate the local X axis (centroidal axis of the member) and verify that it is not parallel to the global Y axis.

2. Construct a plane that contains the local X axis and is parallel to the global Y axis (Plane ABCD shown in Figure 1.15a). This plane by definition is perpendicular to the global X-Z plane and contains both the local X axis and the Y' (Reference axis - BETA = 0) axis of the member. The Z' axis is orthogonal to this plane, and hence parallel to the global X-Z plane.

3. Pass another plane through the member perpendicular to the local X axis exposing the member cross section (Plane EFGH in Figure 1.15a). The line defined by the intersection of these two planes is the Y' axis. The direction of Y' is chosen so that its projection on the global Y axis is in the Y positive direction. The positive projection of the Y' axis on the Y global axis is $\overline{IK}$ as shown in the figure. The Z' axis is also in the plane of the cross section and can be located using the right hand rule.

Having established the reference axis, the BETA angle can be measured from the Y' axis to the positive local Y axis in accordance with the right hand rule.

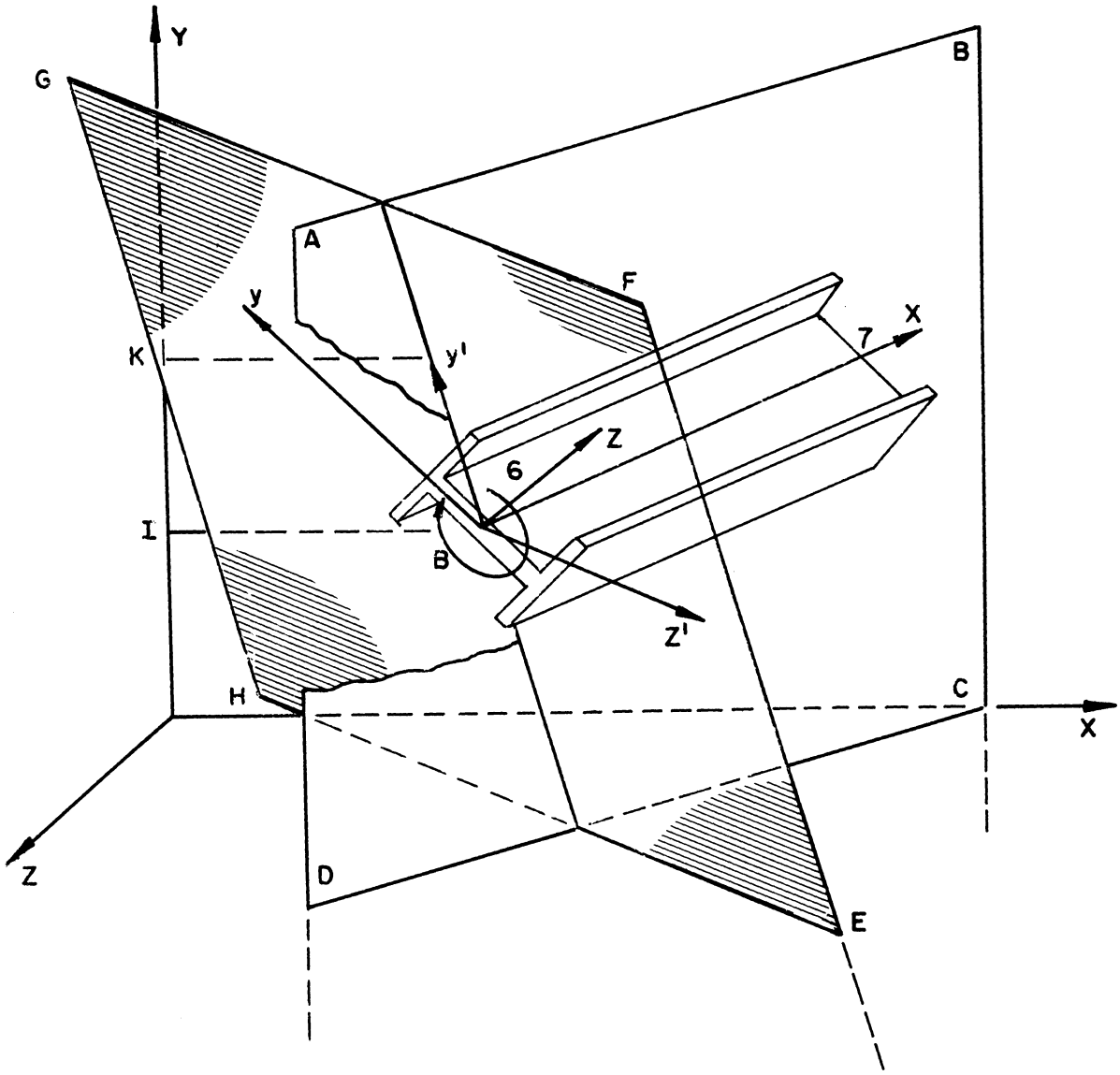

Fig. 1.15 a

1.15 Check List of STRUDL Commands

1.* STRUDL - Subsystem call and problem initiation

2.** TYPE - Structural type and coordinate plane

3.** JOINT COORDINATES - Geometry of the structure and specification of supports

4. JOINT RELEASE - Support joint release and release directions

5.** MEMBER INCIDENCE - Structural connectivity

6. MEMBER RELEASE - Member and fixity

7.*** MEMBER PROPERTIES

Structural Type	Required Properties
Truss	A_X
Plane Frame	A_X, I_Z, or I_Y
Plane Grid	I_X, I_Y, or I_Z
Space Frame	A_X, I_X, I_Y, I_Z

8. CONSTANTS

E- Young's Modulus (1#/in^2 assumed)
G- Shear modulus (.4#/in^2 assumed)
CTE - Coefficient of thermal expansion
BETA - Orientation of local member axes

9.** LOADING - Independent Loading Conditions

JOINT LOADS
JOINT DISPLACEMENTS - On supporting joints in support directions
MEMBER LOADS
MEMBER TEMPERATURE LOADS
MEMBER DISTORTIONS
MEMBER END LOADS

10. LOADING COMBINATION - Dependent Loading Conditions

11. LOAD LIST - Active loading conditions.

12. PRINT DATA - Check on interpretation of input commands.

13.*** STIFFNESS ANALYSIS - Perform the analysis

SCAN ON - Inhibit analysis and output execution for diagnostics on input commands.

14. OUTPUT DECIMAL - Specification of significant figures consistant with loadings and units.

15.*** LIST - Gross member results
FORCES
REACTIONS
DISPLACEMENTS
DISTORTIONS
LOADS

16. LIST - Internal member results
SECTION - Specifications
SECTION FORCES
SECTION STRESS
FORCE ENVELOPE
STRESS ENVELOPE
MAXIMUM STRESS
MAXIMUM STRESS EACH LOADING

* Required first command
** Required commands
*** Required for STIFFNESS ANALYSIS