SOUND WALL DESIGN CRITERIA

The following criteria shall be used when designing sound walls.

I. Loads

Wind Load

For wall heights less than 12';
10 psf for sound walls on ground;
20 psf for sound walls on bridges or retaining walls.

For wall heights 12' and greater;
15 psf for sound walls on ground;
30 psf for sound walls on bridges or retaining walls.

When the top of wall is *higher than 30 feet* above the average level of the adjoining ground, these wind loads shall be increased by multiplying by $(h/30)^{2/7}$ where h is the distance in feet measured from the top of wall to the average level of the adjoining ground.

Seismic Dead Load

0.30 dead load, except on bridges.
1.00 dead load, on bridges.

Earth Pressure

36 lbs. per cubic foot equivalent fluid pressure except a pressure of 27 lbs. per cubic foot shall be used to obtain maximum loads on heels of wall footings. When highway traffic can come within a distance equal to one-half the height of the retained earth, the pressure shall be increased by adding a live load surcharge equal to not less than 2 feet of earth except that no live load surcharge shall be combined with seismic loads.

Seismic Earth Load

For those sound walls that are also used as earth retaining structures, add the seismic load of the fill being retained. The most frequently used method for the calculation of the seismic soil forces is the static approach developed by Mononobe and Okabe. The Mononobe–Okabe analysis is an extension of the sliding wedge theory which takes into account the horizontal and vertical inertia forces acting on the soil. The analysis is described in detail in the publication *Design of Earth Retaining Structures for Dynamic Loads*, Seed, H. B. and Whitman, R.V. (1970), ASCE Specialty Conference – Lateral Stresses in the Ground and Earth Retaining Structures.

Supersedes Memo to Designers 22-1 dated August 1981

Traffic Impact Load

It will not be necessary to apply traffic impact loads to sound walls unless they are combined with concrete safety shaped barriers. The foundation systems for those sound wall and barrier combinations that are located adjacent to roadway side slopes shall not be less than what is required for the traffic impact load alone. The minimum foundation requirements for traffic impact loading are shown in Section IV: Foundation Design.

When the sound wall and barrier combination is supported on a bridge superstructure, the design of the barrier attachment details shall be based on the group loads that apply or on a traffic impact load, whichever controls. The application of traffic impact loading shall be as specified in Article 2.7 – Railings of the *Bridge Design Specifications*.

The walls and foundation of Standard Retaining Wall Types 1, 1A, 2, 3, 4 and 5 can be considered to withstand the traffic impact load that is transmitted to the wall from the barrier. The walls and foundations will, however, have to be investigated for sound wall loading using the appropriate sound wall group loads.

Bridge Loads

When a sound wall is supported by a bridge superstructure, the wind or seismic load to be applied to the superstructure and substructure of the bridge shall be as specified in Articles 3.15 – Wind Loads and 3.21 – Seismic Forces of the *Bridge Design Specifications*. Note that additional reinforcement may be required in the barrier and overhang to resist the loads carried by the sound wall.

II. Load Combinations

The following groups represent various combination of loads to which the sound wall structure may be subjected. Each part of the structure and its foundation shall be proportioned for either: Groups 1, 2 or 3; or Groups A, B, C, D or E — as they apply.

Working Stress Design (WSD)		Percentage of Unit Stress
Group 1:	D + E + SC	100%
Group 2:	D + W + SC + E	133⅓%
Group 3:	D + EQD + E	133⅓%

Where: D = Dead Load
E = Lateral Earth Pressure
SC = Live Load Surcharge
W = Wind Load
EQD = Seismic Dead Load

Load Factor Design (LFD)

Groups with Load Factors

Group A: $(\beta \times D) + 1.7\ E + 1.7\ SC$
Group B: $(\beta \times D) + 1.7\ E + 1.3\ W$
Group C: $(\beta \times D) + 1.3\ E + 1.3\ EQE$
Group D: $(\beta \times D) + 1.3\ E + 1.3\ EQD$
Group E: $(\beta \times D) + 1.1\ E + 1.1\ (EQE + EQD)$

Where : β = 1.0 or 1.3, whichever controls in Design
D = Dead Load
E = Lateral Earth Pressure
SC = Live Load Surcharge
W = Wind Load
EQE = Seismic Earth Load
EQD = Seismic Dead Load

Strength Reduction Factors, ϕ

Reinforced Concrete:
For Flexure ..... $\phi = 0.90$
For Shear ..... $\phi = 0.85$
For Axial Compression ..... $\phi = 0.70$

Foundations:
For Soil Resistance ..... $\phi = 0.90$
For Soil Active Resistance ..... $\phi = 1.00$
For Soil Bearing Pressure, Except Under EQ ..... $\phi = 0.50$
For Soil Bearing Pressure, Under EQ ..... $\phi = 1.00$
For Pile Bearing Load, Except Under EQ ..... $\phi = 0.75$
For Pile Bearing Load, Under EQ ..... $\phi = 1.00$

III. Wall Design

Specifications

The structural members of the sound wall and the foundations shall be proportioned according to allowable stresses given in the codes listed below.

Applicable Codes

Concrete *Bridge Design Specifications*, Section 8 - Reinforced Concrete Design.

Masonry *Uniform Building Code (UBC)*, 1979 Edition, Chapter 24 – Masonry.

Stucco[1]	*Uniform Building Code (UBC)*, 1979 Edition, Chapter 47 – Wall and Ceiling Coverings.
Timber	*National Design Specification for Wood Construction*, National Forest Product Association, latest edition.
Plywood	*Plywood Design Specifications*, American Plywood Association, latest edition.
Steel[2]	*Specification for the Design, Fabrication and Erection of Structural Steel for buildings*, American Institute of Steel Construction, latest edition.
Steel[3]	*Specification for the Design of Cold-Formed Steel Structural Members*, American Iron and Steel Institute, latest edition.
Welding	*Uniform Building Code (UBC)*, 1979 Edition, Chapter 27 – Steel, Table 27.

Design Methods

The following materials shall be designed by the Load Factor Design (LFD) Method: Cast-in-place Concrete, Precast Concrete, Rolled Steel shapes and Rolled Steel Plates.

The following materials shall be designed by the Working Stress Design (WSD) Method: Masonry, Stucco, Timber, Plywood, Cold-Formed Steel Ribbed Sections and Sheet Metal.

Safety shaped barriers and foundations supporting such barriers, including piles, must be designed for an ultimate strength of $f'_c = 3250$ psi. All other concrete components of sound walls may be designed for an ultimate strength for which each part is designed. 2700 psi is the assumed ultimate strength for concrete containing five sacks of portland cement per cubic yard.

When designing steel sound walls, note that both AISC and AISI require that the sections be checked for compressive buckling.

Masonry Design

Masonry walls shall be designed as reinforced hollow unit masonry using the Working Stress Design (WSD) Method.

Walls are to be reinforced as required by design or to meet the minimum area requirements of UBC. To comply with UBC, the sum of the areas of horizontal and vertical reinforcement shall be at least 0.002 times the gross cross-sectional area of the wall and the minimum area of reinforce-

[1]Exterior portland cement plaster.
[2]Hot rolled shaped and plates.
[3]Cold-formed ribbed sections and sheet metal.

ment in either direction shall be not less than 0.0007 times the gross cross-sectional area of the wall. The maximum spacing of this reinforcement shall be 4'-0" on center. Bond beams will be required at locations where horizontal reinforcement is placed. (See Figure 1.)

When masonry units are laid in stacked bond, ladder type longitudinal joint reinforcement will be required. The joint reinforcement will be not less than two continuous 9 gage wires. This reinforcement is to be embedded in the mortar bed joints at 24 inches maximum between bond beams.

Sound Walls on Structures

For sound walls on structures and adjacent to the traveled way, the portion of the sound wall above the traffic barrier should be able to resist the impact of a vehicle climbing above the traffic barrier. The recommended materials for use on structures are masonry block and cast-in-place concrete. Cast-in-place concrete is preferred over masonry block due to its resistance to fragmenting upon impact. (See Figure 2.) For similar reasons, do not use wood or lightweight masonry blocks adjacent to traffic. Precast panels are not allowed on bridges or retaining walls. Each masonry block on bridges must be reinforced and the lower two feet of blocks should be fully grouted.

Expansion joints are required in walls at the centerline of bents, at the centerline of spans, at hinges and at any other existing expansion joints in the structure. Place additional joints in the wall as required to minimize stresses on the wall due to live load deflection of the bridge. A dowel is required at the top of masonry block walls at each joint to maintain proper alignment. (See Figure 3.) The bridge barrier should be continuous except at expansion joints in the deck.

Retrofitting barriers with sound walls may require replacing the entire barrier due to either its inadequate flexural capacity to carry the wall loads, or because of inadequate anchorage of the barrier to the deck. See Memo to Designers 14-6 for barrier anchorage recommendations.

Bridge overhangs and retaining walls must be checked for structural adequacy. Check as-built plans or Memo to Designers 9-4 for material capacities of the existing structure. Steel girder bridges may require strengthening.

The addition of sound walls to existing bridges may cause changes in the structure deflections that could result in drainage problems along the deck surface. Since this may be a particular problem when concrete or masonry sound walls are placed on structures with flat grades, it is suggested that existing profiles, cross slopes, and deflections be reviewed to assure that adequate drainage is available. To correct water ponding problems that developed on several recent projects, the Office of Structures Construction used a detail similar to the standard Deck Bleeder Drain, Detail 7-6, shown on Standard Plan Sheet B7-5. In the detail used, a 1" diameter PVC pipe was glued into a 1¼" diameter hole that had been cored through the deck overhang. The pipe was located 1" clear from the face of barrier, set flush with the deck surface and was extended 1" below the overhang soffit.

Do not place masonry block walls on existing steel girder bridges when traffic is carried on the structure during masonry construction. Traffic vibration will settle blocks into the mortar bed.

Sound walls on approach slabs require special consideration. Approach slabs are not designed to accommodate the wall dead load and loads transferred from it. Also, approach slab settlement and deflection may cause structural and alignment problems. See the Approach Slab Committee for recommendations.

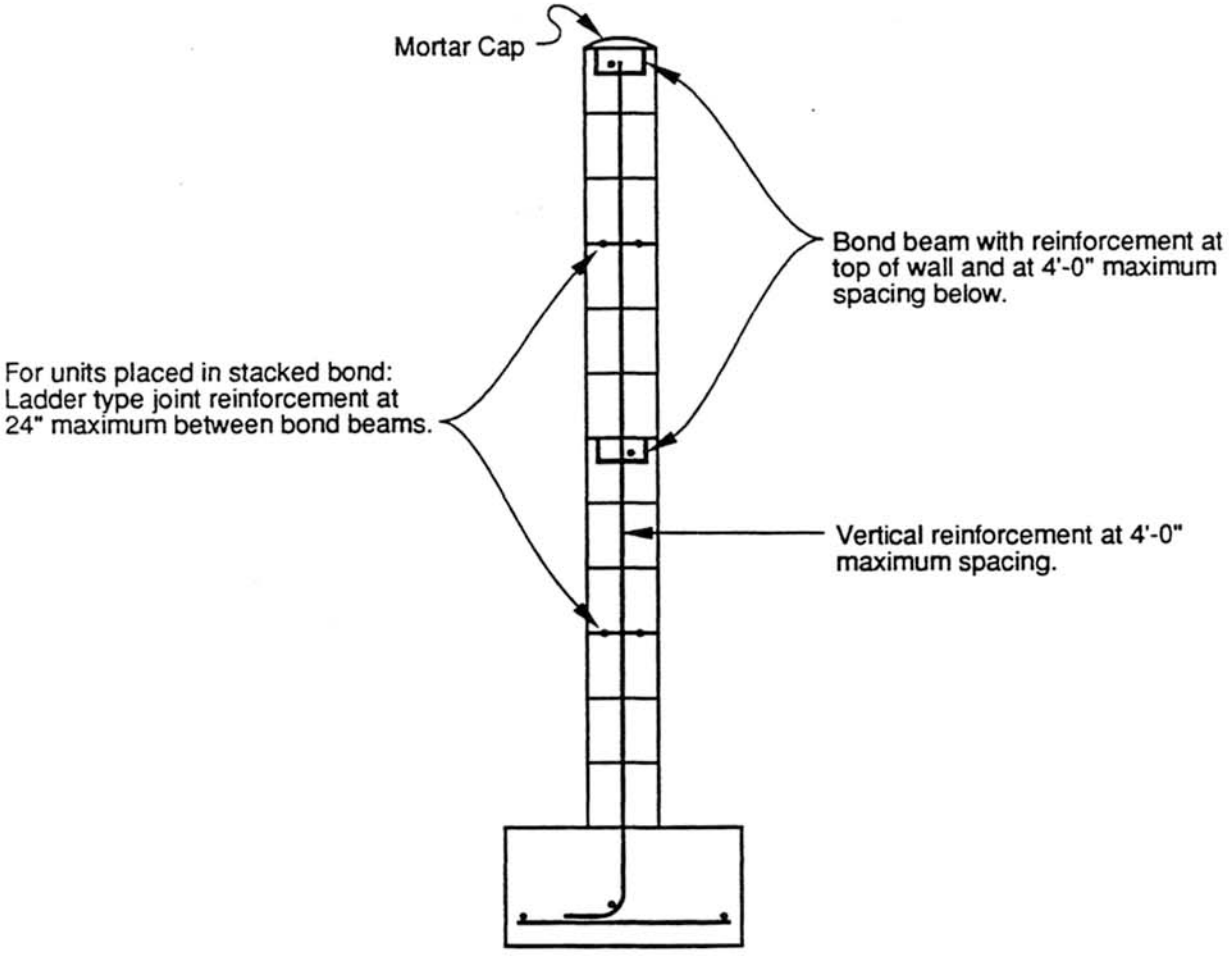

Minimum Reinforcement for Masonry Block Walls

Figure 1

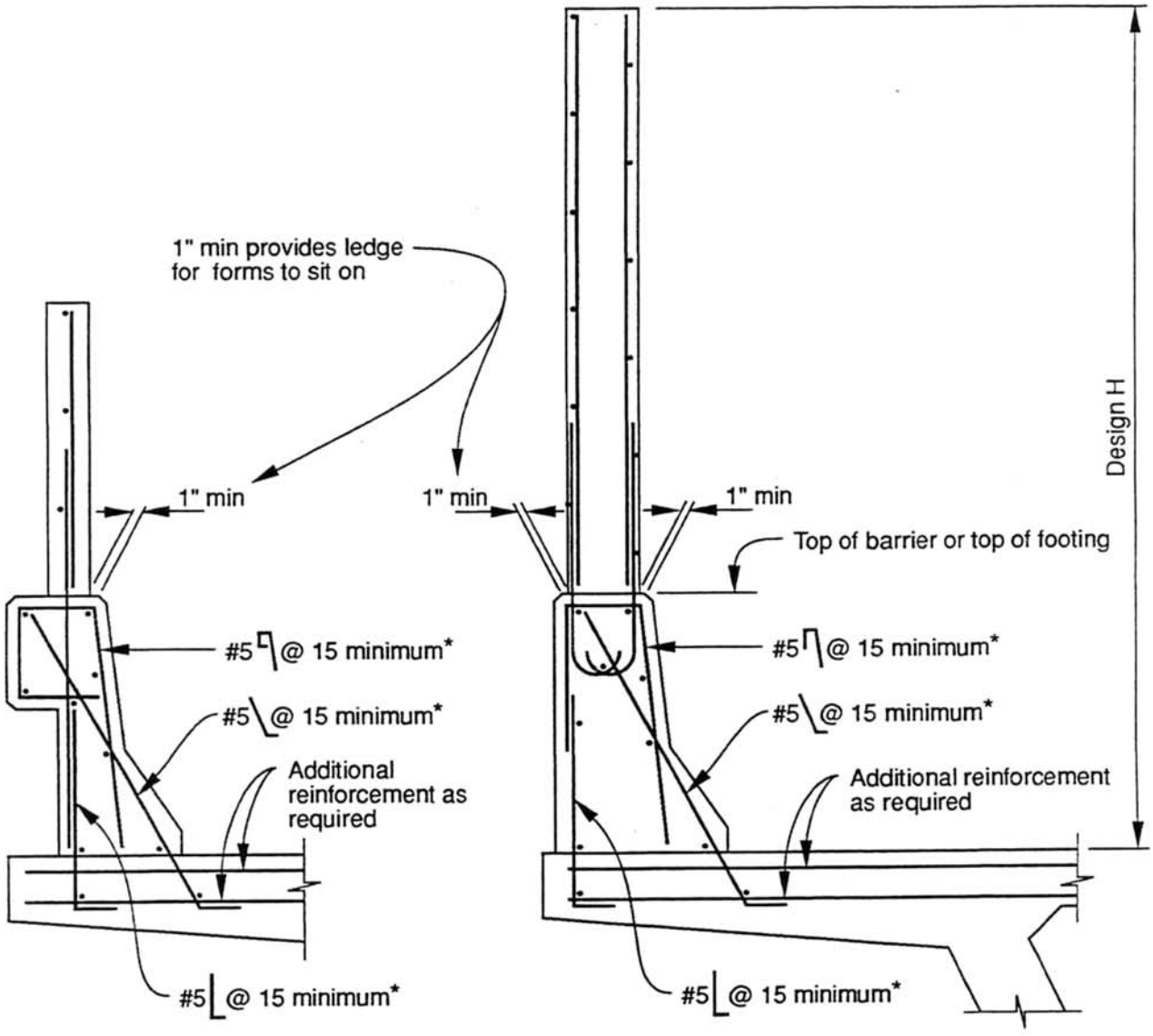

Cast-In-Place Sound Wall

*Designer to determine required reinforcement.

Figure 2

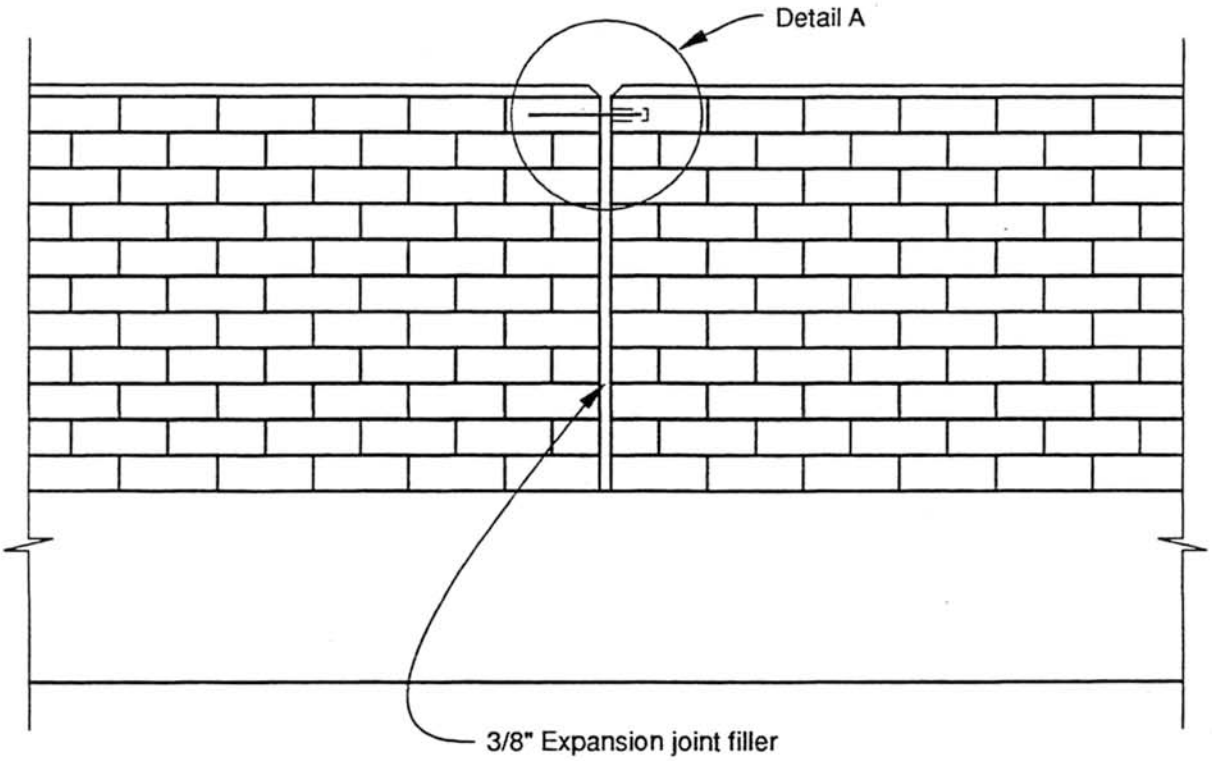

Alignment Key Detail

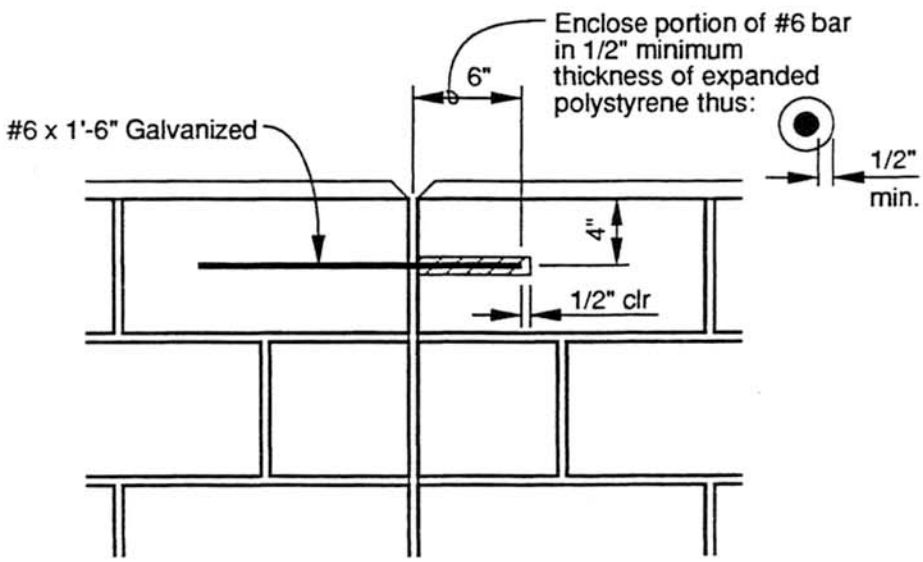

Detail A
No Scale

Figure 3

IV. Foundation Design

The allowable vertical soil bearing capacity, the soil properties to be used in calculating the lateral soil bearing values and other pertinent foundation data will be shown in the foundation report that is provided by the Engineering Geology and Technical Services Branch of the Transportation Laboratory.

The passive soil pressures *shall be* increased by a factor of 1.5 for the design of laterally loaded piles located in cohesionless soils and in level ground. The increased pressure is defined as the 'EFFECTIVE' passive pressure and the increase factor of 1.5 is defined as the 'ISOLATION' factor. The 'ISOLATION' factor is a means to account for the assumption that a laterally loaded pile is resisted by a section of earth that is wider than that of the pile. A level ground condition is defined as one in which the ground surface is approximately level or , when sloping down and away from the pile, is not steeper than 10:1 for $\phi = 35°$ or 14:1 for $\phi = 25°$. A level ground condition may also be assumed when the hinge point of any adjacent down or negative slope that is steeper than 10:1 for $\phi = 35°$ or 14:1 for $\phi = 25°$ is not located closer than 2 times the pile embedment. The 10:1 and 14:1 negative slopes are approximately equal to a β/ϕ ratio of - 0.15, where β is the angle of the slope in degrees and ϕ is the angle of shearing resistance in degrees. There shall be no increase in the 'EFFECTIVE' passive pressure for piles located in cohesive soils or in sloping ground. Figure 5 illustrates the parameter for the level ground condition.

With the exception of the factors of safety for the stability of spread footings, the foundation requirements for embedment, width, depth and strength shall be determined by the Load Factor Design (LFD) Method using the loading combinations, the load factors and the strength reduction factors shown in Section II: Load Combinations.

Piles located on slopes *are* to be protected by a berm. The berm should have 1'-0" minimum width and provide 6" minimum depth of cover above the top of pile or pile cap.

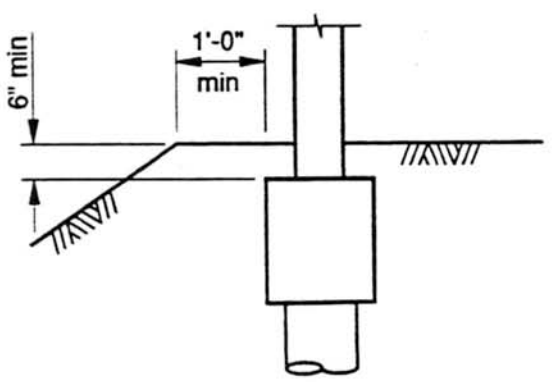

Figure 4

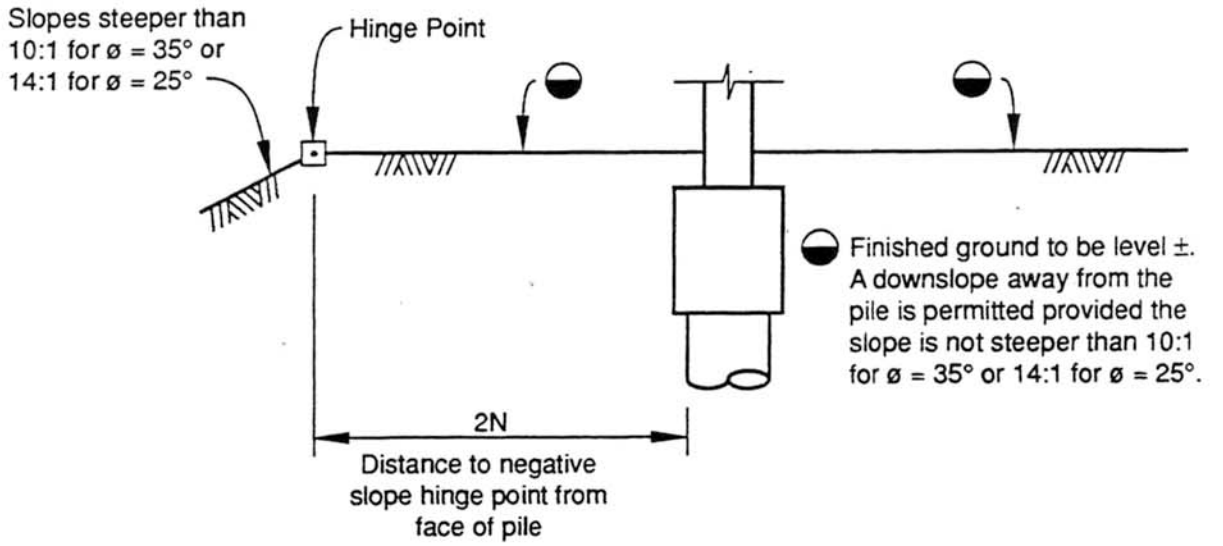

Note: If the location of the slope hinge point is less than 2N, the level ground condition *cannot* be used.

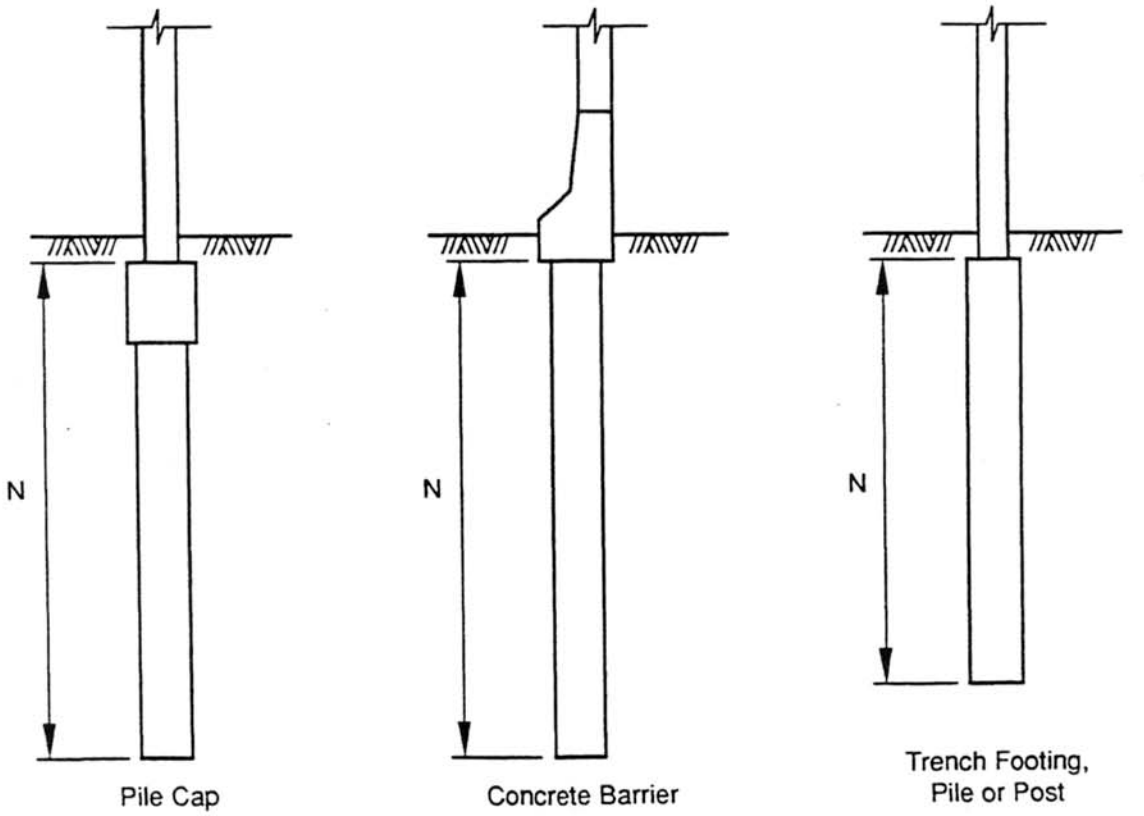

Criteria for Level Ground

Figure 5

Spread Footing

Use Service Level Loads for determining the factors of safety for stability.

Minimum Factors of Safety for Overturning.

Group 1 = 2.0
Group 2 = 1.5
Group 3 = 1.5

Minimum Factors of Safety for Sliding.

Group 1 = 1.5
Group 2 = 1.2
Group 3 = 1.2

Pile Embedment

Pile embedments are to be determined by structural analysis.

The procedure shown on page 19 of the U.S.S. Steel Sheet Piling Design Manual, printed July 1975 *may be* used. The analysis is based on the assumption that the pile is relatively stiff. Therefore, the depth of pile embedment should be limited to 12 times the pile diameter. Since the analysis is also based on passive soil pressures which are ultimate values, the required factors of safety for stability will be provided through the use of the load factors and the soil strength reduction factors shown in Section II: Load Combinations.

Several computer programs are available for determining sound wall pile embedment. Passive soil pressures for use in hand calculations or as computer input data are also available by program. See the sound wall technical specialist for information on these programs.

Pile Design

Although a study of the interaction diagrams for laterally loaded sound wall piles indicated that they behaved more as flexural members than as compression members, it is strongly recommended that those portions of the UBC, ACI and AASHTO codes dealing with compression members subjected to lateral loads be used for pile design. The three codes have similar requirements for design in seismic areas where the probability of major damage during an earthquake is high.

Piles must have the capacity to take the applied shear that is generated by the lateral loads. It can be assumed that the spiral reinforcement will serve as the transverse or lateral reinforcement required by the codes. The total shear capacity of the pile can be based on the combination of the resisting values of the concrete and the spiral shear reinforcement. The recommended minimum spiral for

shear is W3.5 at six inch pitch. It is further recommended that the spiral be adequately supported by a minimum of six longitudinal bars and that the minimum bar size be #4. The size of the longitudinal bars should be as required to provide the needed flexural capacity.

The interaction diagrams in *Bridge Design Aids*, page 16-9, may be used for determining the longitudinal pile reinforcement. Note that there are two sets of diagrams. Each set is based on a different ultimate concrete strength. The capacity of most piles should be based on $f'_c = 2700$ psi, which is the ultimate value for concrete containing five sacks of cement per cubic yard. Piles that support the concrete safety shaped barrier must, however, be based on $f'_c = 3250$ psi. The production computer program YIELD may be used for the design of sound wall piles.

When P_e, the maximum factored axial load, is less than $0.4\ \phi\ P_b$, the requirement for volumetric ratio for concrete confinement may be waived. P_b is the nominal axial load strength at balanced strain conditions. It is also suggested that the d/2 spacing requirement for shear reinforcement be waived when the recommended spiral reinforcement provides sufficient shear capacity.

Minimum Foundation Requirement for Traffic Impact Loading

When the sound wall is combined with a concrete safety shaped traffic barrier the resulting foundation shall meet or exceed the following minimum foundation requirements which were developed from results of crash tests. The test results are contained in Research Report No. M & R 36412.

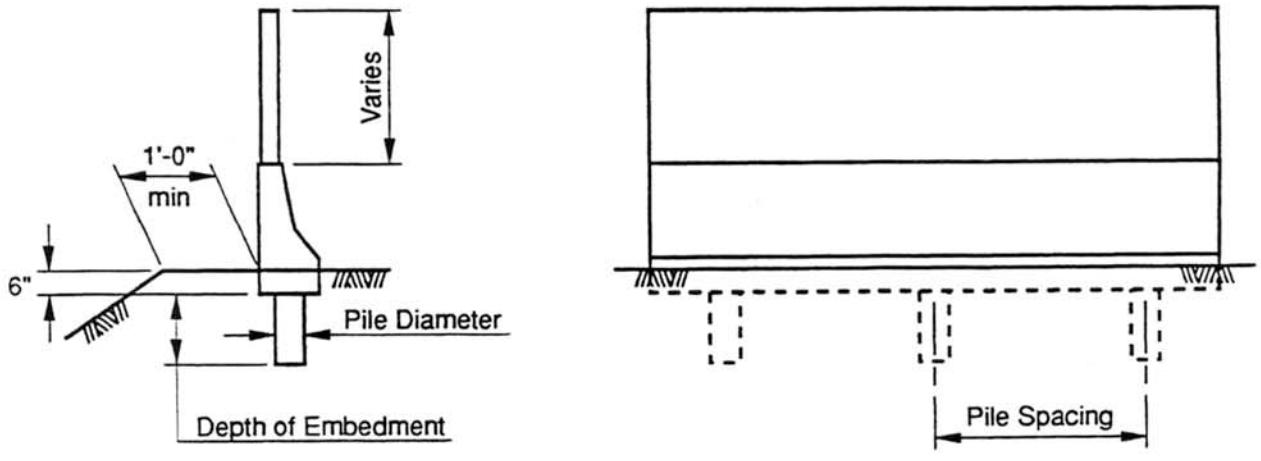

Pile Diameter	Minimum Depth of Embedment	Maximum Pile Spacing	Minimum Pile Reinforcement	Spiral Pile Reinforcement
12"	4'-0"	10'-0"	#6 tot 7	W3.5 @ 6" pitch
14"	4'-0"	10'-0"	#6 tot 6	W3.5 @ 6" pitch

Figure 6A. Barriers with Pile Supports

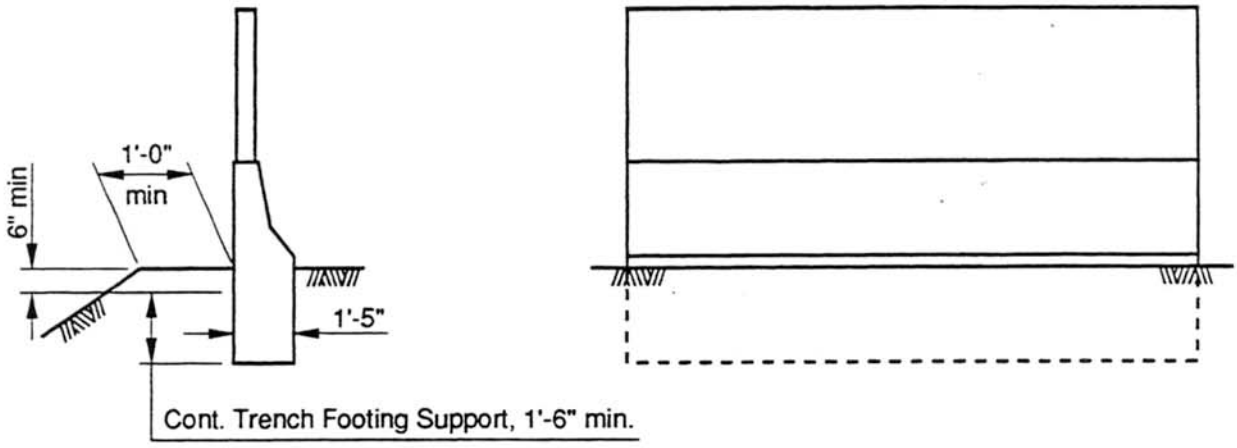

Figure 6B. Barriers with Continuous Trench Footing Support

Philip C Warriner

Guy D. Mancarti

JPH:jgf

22-1 SOUND WALL DESIGN CRITERIA

The following criteria shall be used when designing sound walls.

I. Loads

Wind Load

For wall heights less than 3.66 m;

718 Pa for sound walls on ground;

958 Pa for sound walls on bridges or retaining walls.

For wall heights 3.66 m and greater;

718 Pa for sound walls on ground;

1436 Pa for sound walls on bridges or retaining walls.

When the top of wall is *higher than 9.15 m* above the average level of the adjoining ground, these wind loads shall be increased by multiplying by $(h/9.15)^{2/7}$ where h is the distance in meters measured from the top of wall to the average level of the adjoining ground.

Seismic Dead Load

0.30 dead load, except on bridges.

1.00 dead load, on bridges.

Earth Pressure

577 kg/m^3 equivalent fluid pressure except a pressure of 433 kg/m^3 shall be used to obtain maximum loads on heels of wall footings. When highway traffic can come within a distance equal to one-half the height of the retained earth, the pressure shall be increased by adding a live load surcharge equal to not less than 610 mm of earth except that no live load surcharge shall be combined with seismic loads.

Seismic Earth Load

For those sound walls that are also used as earth retaining structures, add the seismic load of the fill being retained. The most frequently used method for the calculation of the seismic soil forces is the static approach developed by Mononobe and Okabe. The Mononobe–Okabe analysis is an extension of the sliding wedge theory which takes into account the horizontal and vertical inertia forces acting on the soil. The analysis is described in detail in the publication *Design of Earth Retaining Structures for Dynamic Loads*, Seed, H. B. and Whitman, R.V. (1970), ASCE Specialty Conference – Lateral Stresses in the Ground and Earth Retaining Structures.

Traffic Impact Load

It will not be necessary to apply traffic impact loads to sound walls unless they are combined with concrete safety shaped barriers. The foundation systems for those sound wall and barrier combinations that are located adjacent to roadway side slopes shall not be less than what is required for the traffic impact load alone. The minimum foundation requirements for traffic impact loading are shown in Section IV: Foundation Design.

When the sound wall and barrier combination is supported on a bridge superstructure, the design of the barrier attachment details shall be based on the group loads that apply or on a traffic impact load, whichever controls. The application of traffic impact loading shall be as specified in Article 2.7 – Railings of the *Bridge Design Specifications*.

The walls and foundation of Standard Retaining Wall Types 1, 1A, 2, 3, 4 and 5 can be considered to withstand the traffic impact load that is transmitted to the wall from the barrier. The walls and foundations will, however, have to be investigated for sound wall loading using the appropriate sound wall group loads.

Bridge Loads

When a sound wall is supported by a bridge superstructure, the wind or seismic load to be applied to the superstructure and substructure of the bridge shall be as specified in Articles 3.15 – Wind Loads and 3.21 – Earthquakes of the *Bridge Design Specifications*. Note that additional reinforcement may be required in the barrier and overhang to resist the loads carried by the sound wall.

II. Load Combinations

The following groups represent various combination of loads to which the sound wall structure may be subjected. Each part of the structure and its foundation shall be proportioned for either: Groups 1, 2 or 3; or Groups A, B, C, D or E — as they apply.

Working Stress Design (WSD)		Percentage of Unit Stress
Group 1:	D + E + SC	100%
Group 2:	D + W + SC + E	133 $^1/_3$%
Group 3:	D + EQD + E	133 $^1/_3$%

Where:
- D = Dead Load
- E = Lateral Earth Pressure
- SC = Live Load Surcharge
- W = Wind Load
- EQD = Seismic Dead Load

Load Factor Design (LFD)

Groups with Load Factors

Group A:	(β x D) + 1.7 E + 1.7 SC
Group B:	(β x D) + 1.7 E + 1.3 W
Group C:	(β x D) + 1.3 E + 1.3 EQE
Group D:	(β x D) + 1.3 E + 1.3 EQD
Group E:	(β x D) + 1.1 E + 1.1 (EQE + EQD)

Where :
- β = 1.0 or 1.3, whichever controls in Design
- D = Dead Load
- E = Lateral Earth Pressure
- SC = Live Load Surcharge
- W = Wind Load
- EQE = Seismic Earth Load
- EQD = Seismic Dead Load

Strength Reduction Factors, ϕ

Reinforced Concrete:

For Flexure ..... $\phi = 0.90$
For Shear ..... $\phi = 0.85$
For Axial Compression ..... $\phi = 0.70$

Foundations:

For Soil Resistance ..... $\phi = 0.90$
For Soil Active Resistance ..... $\phi = 1.00$
For Soil Bearing Pressure, Except Under EQ ..... $\phi = 0.50$
For Soil Bearing Pressure, Under EQ ..... $\phi = 1.00$
For Pile Bearing Load, Except Under EQ ..... $\phi = 0.75$
For Pile Bearing Load, Under EQ ..... $\phi = 1.00$

III. Wall Design

Specifications

The structural members of the sound wall and the foundations shall be proportioned according to allowable stresses given in the codes listed below.

Applicable Codes

Concrete	*Bridge Design Specifications*, Section 8 - Reinforced Concrete Design.
Masonry	*Uniform Building Code (UBC)*, 1979 Edition, Chapter 24 – Masonry.
Stucco[1]	*Uniform Building Code (UBC)*, 1979 Edition, Chapter 47 – Wall and Ceiling Coverings.
Timber	*National Design Specification for Wood Construction*, National Forest Product Association, latest edition.
Plywood	*Plywood Design Specifications*, American Plywood Association, latest edition.
Steel[2]	*Specification for the Design, Fabrication and Erection of Structural Steel for Buildings*, American Institute of Steel Construction, latest edition.

Steel[3]	*Specification for the Design of Cold-Formed Steel Structural Members*, American Iron and Steel Institute, latest edition.
Welding	*Uniform Building Code (UBC)*, 1979 Edition, Chapter 27 – Steel, Table 27.

Design Methods

The following materials shall be designed by the Working Stress Design (WSD) Method: Masonry, Stucco, Timber, Plywood, Cold-Formed Steel Ribbed Sections, Sheet Metal, Cast-in-Place Concrete, Precast Concrete, Rolled Steel Shapes and Rolled Steel Plates.

Safety shaped barriers and foundations supporting such barriers, including piles, must be designed for an ultimate strength of 22.4 MPa. All other concrete components of sound walls may be designed for an ultimate strength for which each part is designed.

When designing steel sound walls, note that both AISC and AISI require that the sections be checked for compressive buckling.

Masonry Design

Masonry walls shall be designed as reinforced hollow unit masonry using the Working Stress Design (WSD) Method.

Walls are to be reinforced as required by design or to meet the minimum area requirements of UBC. To comply with UBC, the sum of the areas of horizontal and vertical reinforcement shall be at least 0.002 times the gross cross-sectional area of the wall and the minimum area of reinforcement in either direction shall be not less than 0.0007 times the gross cross-sectional area of the wall. The maximum spacing of this reinforcement shall be 1.2 m on center. Bond beams will be required at locations where horizontal reinforcement is placed (see Figure 1).

When masonry units are laid in stacked bond, ladder type longitudinal joint reinforcement will be required. The joint reinforcement will be not less than two continuous 9 gage wires. This reinforcement is to be embedded in the mortar bed joints at 610 mm maximum between bond beams.

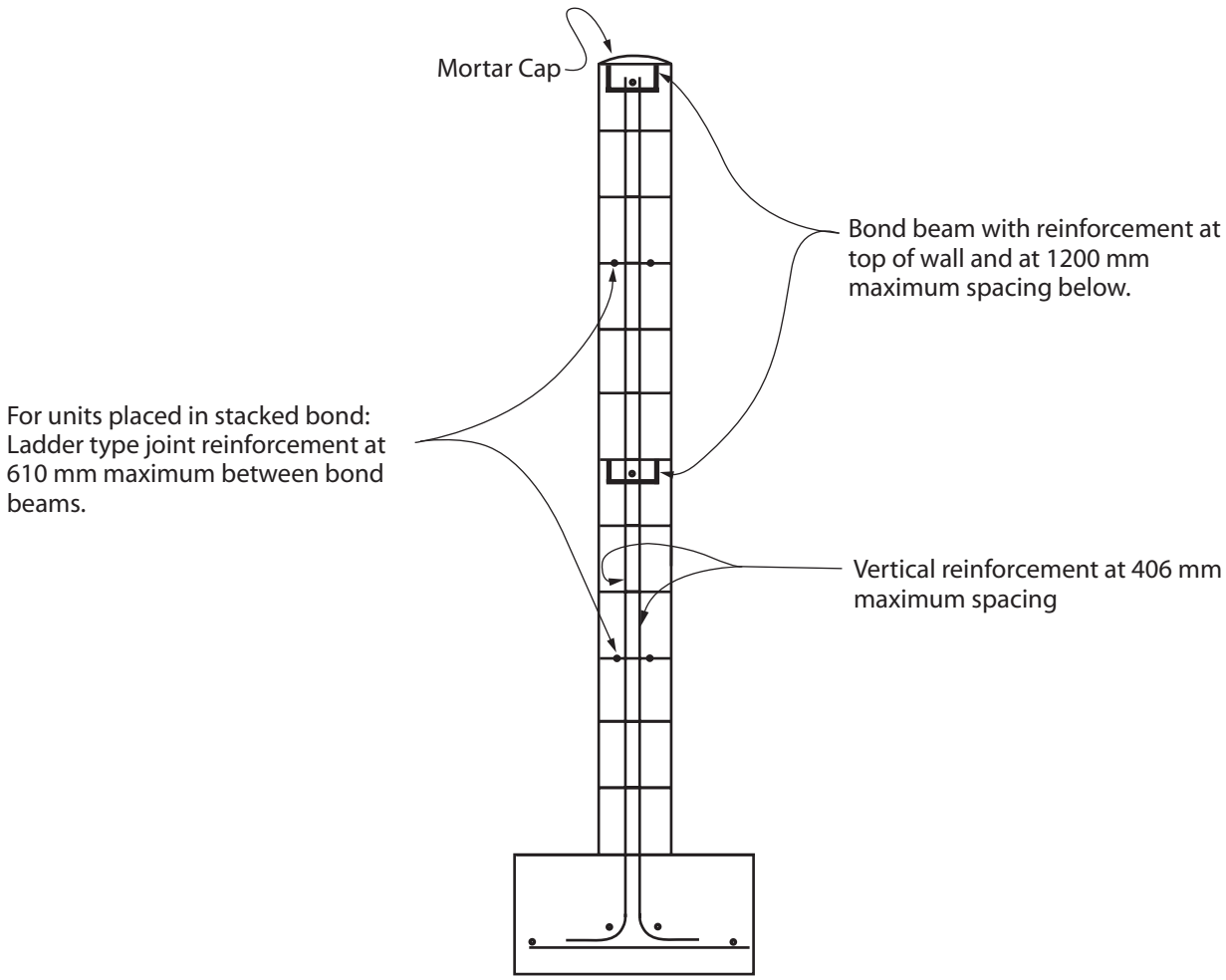

Figure 1 Minimum Reinforcement for Masonry Block Walls

Sound Walls on Structures

For sound walls on structures and adjacent to the traveled way, the portion of the sound wall above the traffic barrier should be able to resist the impact of a vehicle climbing above the traffic barrier. The recommended materials for use on structures are masonry block and cast-in-place concrete. Cast-in-place concrete is preferred over masonry block due to its resistance to fragmenting upon impact (see Figure 2). For similar reasons, do not use wood or lightweight masonry blocks adjacent to traffic. Precast panels are not allowed on bridges or retaining walls. Each masonry block on bridges must be reinforced and the lower two feet of blocks should be fully grouted.

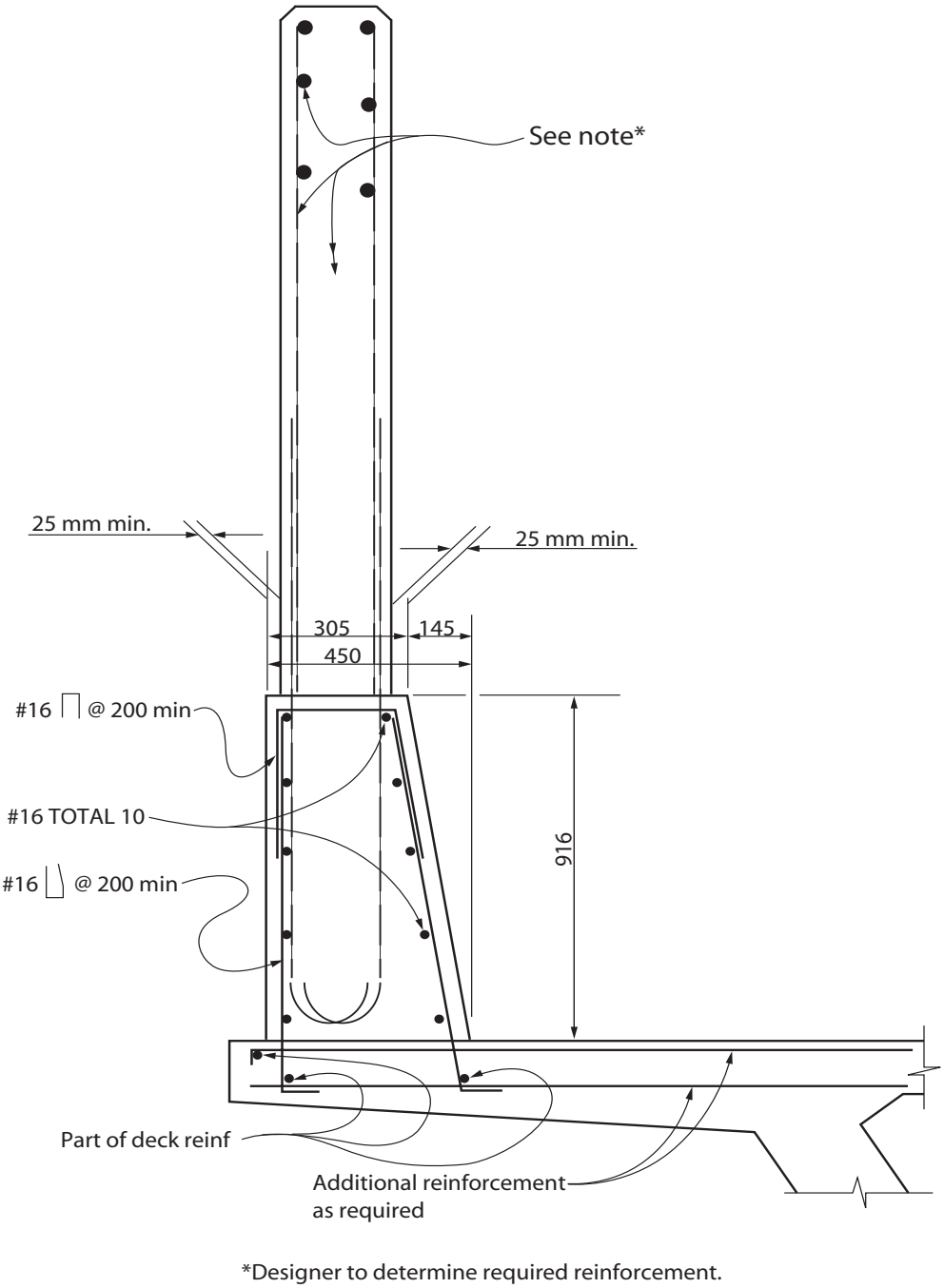

Figure 2 Cast-In-Place Sound Wall

Expansion joints are required in walls at the centerline of bents, at the centerline of spans, at hinges and at any other existing expansion joints in the structure. Place additional joints in the wall as required to minimize stresses on the wall due to live load deflection of the bridge. A dowel is required at the top of masonry block walls at each joint to maintain proper alignment (see Figure 3). The bridge barrier should be continuous except at expansion joints in the deck.

Retrofitting barriers with sound walls may require replacing the entire barrier due to either its inadequate flexural capacity to carry the wall loads, or because of inadequate anchorage of the barrier to the deck. See Memo to Designers 14-6 for barrier anchorage recommendations.

Bridge overhangs and retaining walls must be checked for structural adequacy. Check as-built plans or Memo to Designers 9-4 for material capacities of the existing structure. Steel girder bridges may require strengthening.

The addition of sound walls to existing bridges may cause changes in the structure deflections that could result in drainage problems along the deck surface. Since this may be a particular problem when concrete or masonry sound walls are placed on structures with flat grades, it is suggested that existing profiles, cross slopes, and deflections be reviewed to assure that adequate drainage is available. To correct water ponding problems that developed on several projects, the Office of Structures Construction used a detail similar to the standard Deck Bleeder Drain, Detail 7-6, shown on Standard Plan Sheet B7-5. In the detail used, a 25 mm diameter PVC pipe was glued into a 37 mm diameter hole that had been cored through the deck overhang. The pipe was located 25 mm clear from the face of barrier, set flush with the deck surface and was extended 25 mm below the overhang soffit.

Do not place masonry block walls on existing steel girder bridges when traffic is carried on the structure during masonry construction. Traffic vibration will settle blocks into the mortar bed.

Sound walls on approach slabs require special consideration. Approach slabs are not designed to accommodate the wall dead load and loads transferred from it. Also, approach slab settlement and deflection may cause structural and alignment problems. See the Approach Slab Committee for recommendations.

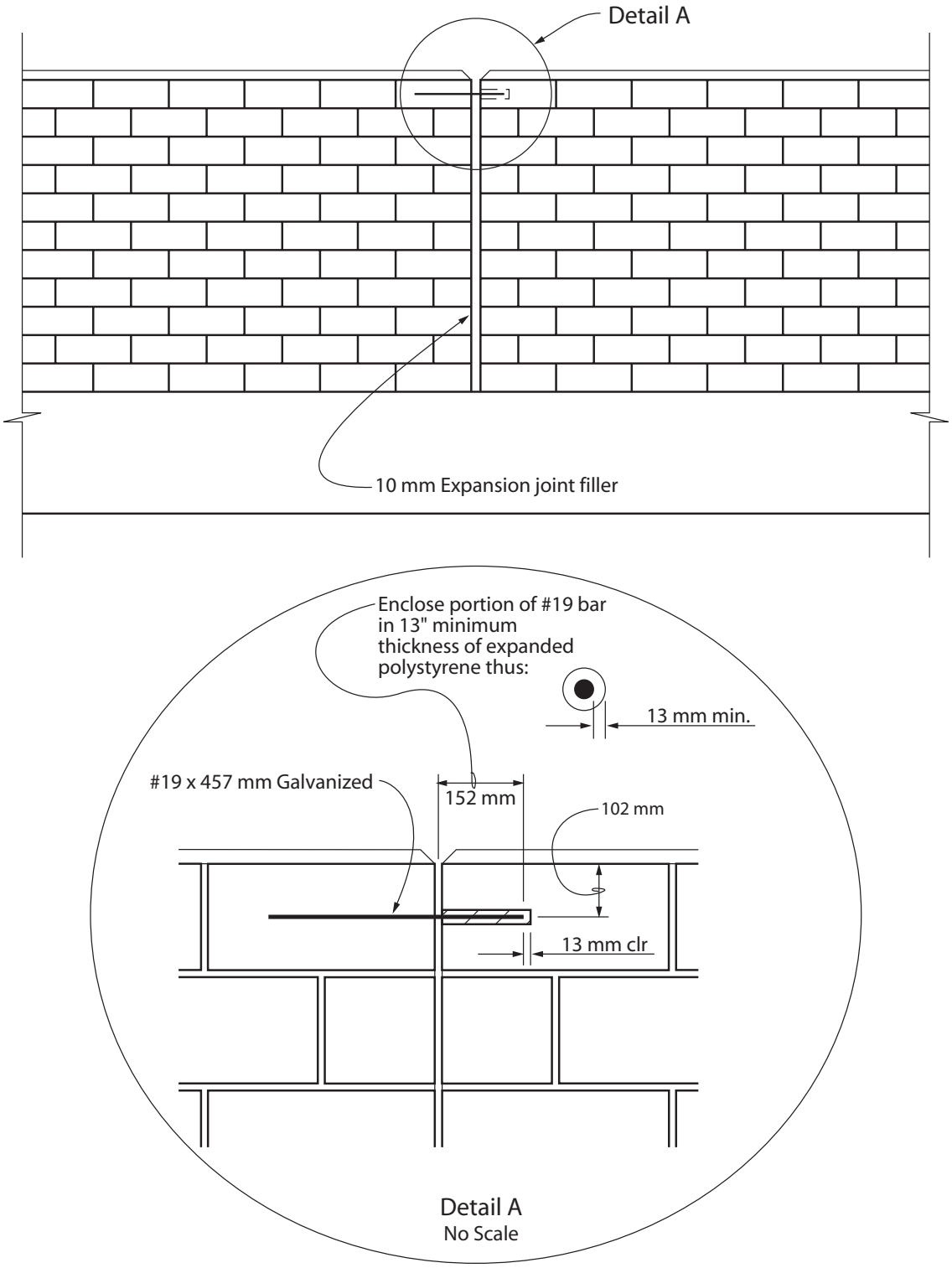

Figure 3 Alignment Key Detail

IV. Foundation Design

The allowable vertical soil bearing capacity, the soil properties to be used in calculating the lateral soil bearing values and other pertinent foundation data will be shown in the foundation report that is provided by the Engineering Geology and Technical Services Branch of the Transportation Laboratory.

The passive soil pressures *shall be* increased by a factor of 1.5 for the design of laterally loaded piles located in cohesionless soils and in level ground. The increased pressure is defined as the 'EFFECTIVE' passive pressure and the increase factor of 1.5 is defined as the 'ISOLATION' factor. The 'ISOLATION' factor is a means to account for the assumption that a laterally loaded pile is resisted by a section of earth that is wider than that of the pile. A level ground condition is defined as one in which the ground surface is approximately level or , when sloping down and away from the pile, is not steeper than 10:1 for $\phi = 35°$ or 14:1 for $\phi = 25°$. A level ground condition may also be assumed when the hinge point of any adjacent down or negative slope that is steeper than 10:1 for $\phi = 35°$ or 14:1 for $\phi = 25°$ is not located closer than 2 times the pile embedment. The 10:1 and 14:1 negative slopes are approximately equal to a β/ϕ ratio of - 0.15, where β is the angle of the slope in degrees and ϕ is the angle of shearing resistance in degrees. There shall be no increase in the 'EFFECTIVE' passive pressure for piles located in cohesive soils or in sloping ground. Figure 5 illustrates the parameter for the level ground condition.

With the exception of the factors of safety for the stability of spread footings, the foundation requirements for embedment, width, depth and strength shall be determined by the Load Factor Design (LFD) Method using the loading combinations, the load factors and the strength reduction factors shown in Section II: Load Combinations.

Piles located on slopes *are* to be protected by a berm. The berm should have 305 mm minimum width and provide 152 mm minimum depth of cover above the top of pile or pile cap.

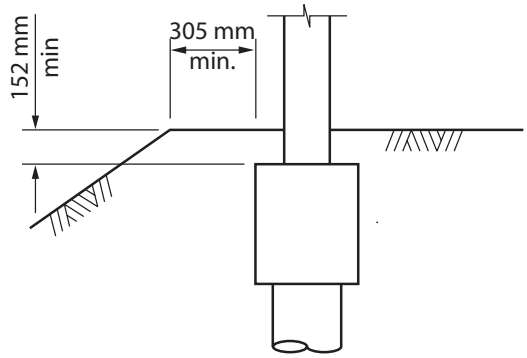

Figure 4

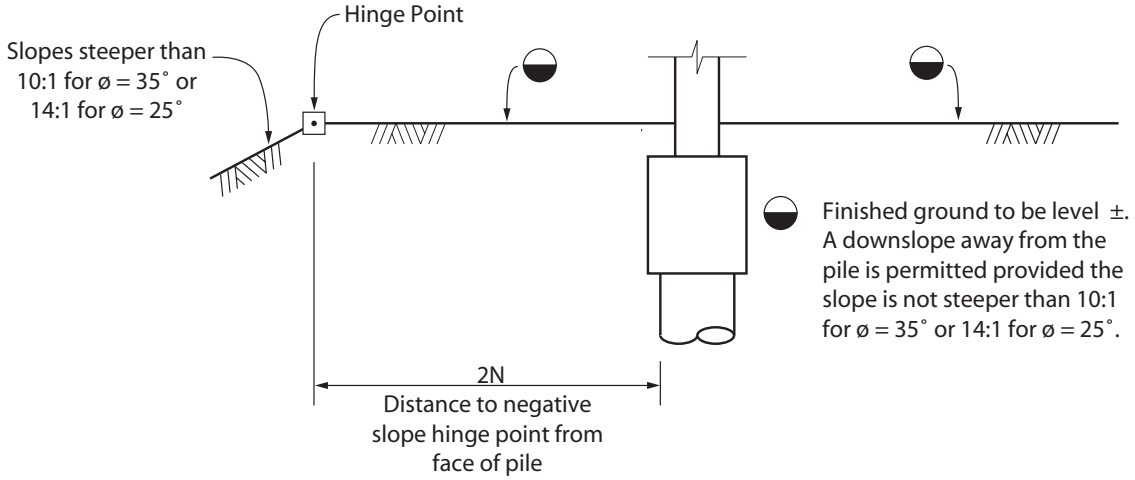

Note: If the location of the slope hinge point is less than 2N, the level ground condition *cannot* be used.

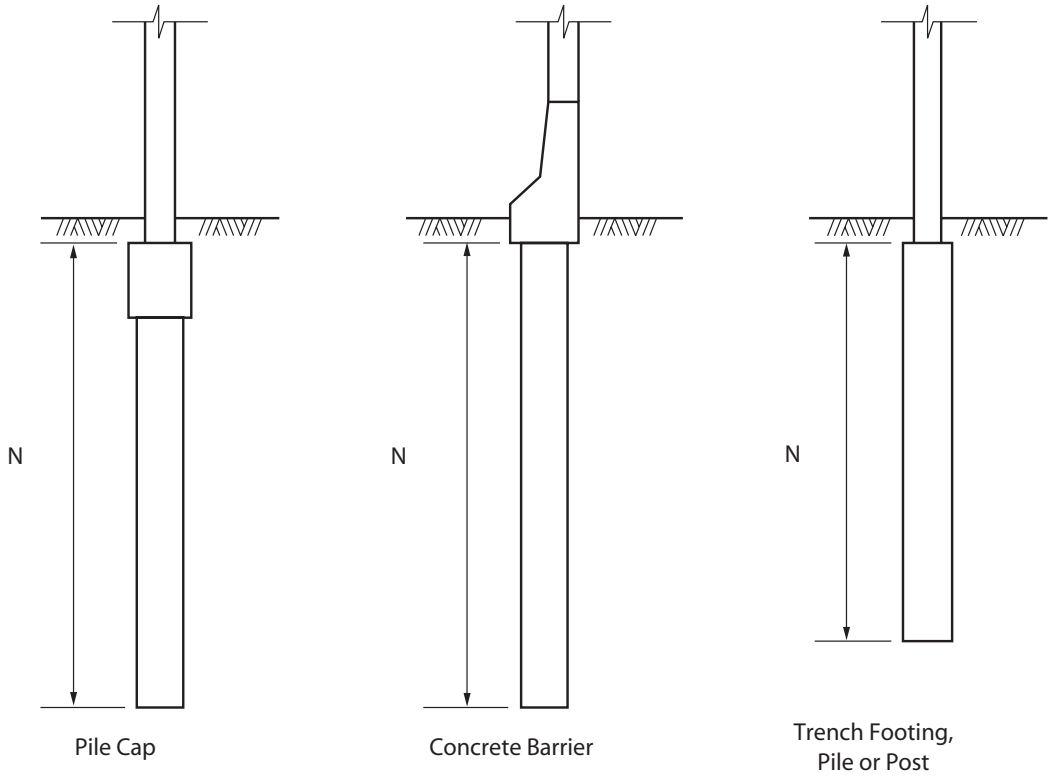

Figure 5 Criteria for Level Ground

Spread Footing

Use Service Level Loads for determining the factors of safety for stability.

Minimum Factors of Safety for Overturning.

Group 1 = 2.0
Group 2 = 1.5
Group 3 = 1.5

Minimum Factors of Safety for Sliding.

Group 1 = 1.5
Group 2 = 1.2
Group 3 = 1.2

Pile Embedment

Pile embedments are to be determined by structural analysis.

The procedure shown on page 19 of the U.S.S. Steel Sheet Piling Design Manual, printed July 1975 *may be* used. The analysis is based on the assumption that the pile is relatively stiff. Therefore, the depth of pile embedment should be limited to 12 times the pile diameter. Since the analysis is also based on passive soil pressures which are ultimate values, the required factors of safety for stability will be provided through the use of the load factors and the soil strength reduction factors shown in Section II: Load Combinations.

Several computer programs are available for determining sound wall pile embedment. Passive soil pressures for use in hand calculations or as computer input data are also available by program. See the sound wall technical specialist for information on these programs.

Pile Design

Although a study of the interaction diagrams for laterally loaded sound wall piles indicated that they behaved more as flexural members than as compression members, it is strongly recommended that those portions of the UBC, ACI and AASHTO codes dealing with compression members subjected to lateral loads be used for pile design. The three codes have similar requirements for design in seismic areas where the probability of major damage during an earthquake is high.

Piles must have the capacity to take the applied shear that is generated by the lateral loads. It can be assumed that the spiral reinforcement will serve as the transverse or lateral reinforcement required by the codes. The total shear capacity of the pile can be based on the combination of the resisting values of the concrete and the spiral shear reinforcement. The recommended minimum spiral for shear is MW22 at 150 mm pitch. It is further recommended that the spiral be adequately supported by a minimum of six longitudinal bars and that the minimum bar size be #13. The size of the longitudinal bars should be as required to provide the needed flexural capacity.

The interaction diagrams in *Bridge Design Aids*, page 16-9, may be used for determining the longitudinal pile reinforcement. Note that there are two sets of diagrams. Each set is based on a different ultimate concrete strength. The capacity of most piles should be based on f'_c = 18.6 MPa, which is the ultimate value for concrete containing five sacks of cement per cubic yard. Piles that support the concrete safety shaped barrier must, however, be based on f'_c = 22.4 MPa. The production computer program YIELD may be used for the design of sound wall piles.

When P_e, the maximum factored axial load, is less than $0.4\ \phi\ P_b$, the requirement for volumetric ratio for concrete confinement may be waived. P_b is the nominal axial load strength at balanced strain conditions. It is also suggested that the d/2 spacing requirement for shear reinforcement be waived when the recommended spiral reinforcement provides sufficient shear capacity.

Minimum Foundation Requirement for Traffic Impact Loading

When the sound wall is combined with a concrete safety shaped traffic barrier the resulting foundation shall meet or exceed the following minimum foundation requirements which were developed from results of crash tests. The test results are contained in Research Report No. M & R 36412.

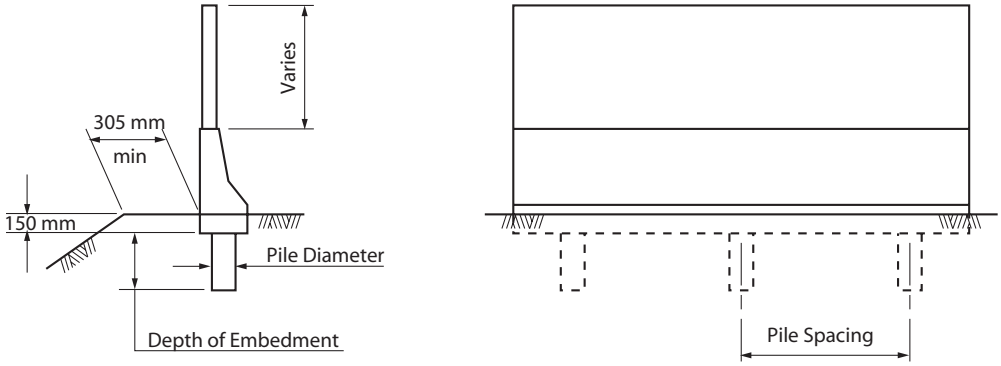

Pile Diameter	Minimum Depth of Embedment	Maximum Pile Spacing	Minimum Pile Reinforcement	Spiral Pile Reinforcement
304 mm	1220 mm	3000 mm	#19 tot 7	MW25 @ 150 mm
356 mm	1220 mm	3000 mm	#19 tot 6	MW 25 @ 150 mm

Figure 6a Barriers with Pile Supports

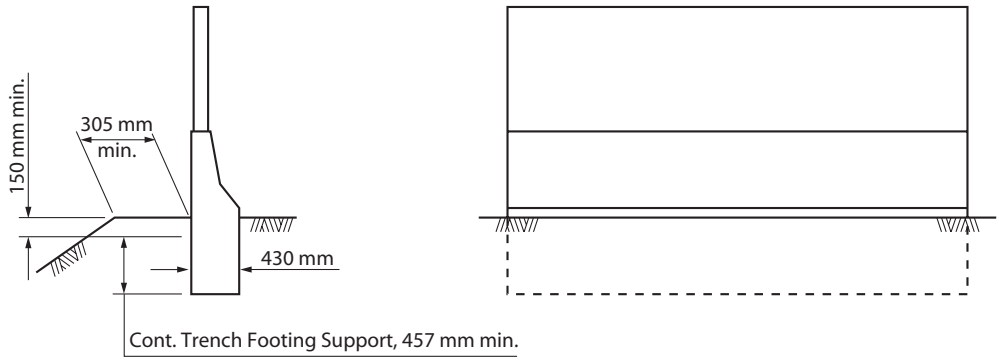

Figure 6b Barriers with Continuous Trench Footing Support

Original signed by Thomas A. Ostrom for Eldon Davisson

Eldon R. Davisson

Deputy Division Chief, Engineering Services, Structure Design

TPJ:kds