# Location of Details and Notes

## General

Project plans must always be detailed and arranged in such a manner that a contractor can build the work. We should keep in mind that contractors, and especially subcontractors, have but a very short time to prepare a bid and cannot be expected to spend hours searching through our plans to find relevant details. When detailing or reviewing plans, the following items should be carefully observed:

- If details are not shown on the logical sheet to which they pertain, a cross reference should be noted on the plans. If this is necessary, a bold note should be placed on the appropriate sheet to refer to the detail.
- Names are preferred to abbreviations. If abbreviations are used, make sure they are the accepted ones. (See Section 1-1.02 of the *Standard Specifications*, Standard Plan A10A and B0-1 of the *Standard Plans*, and the Appendix A of *Bridge Design Details.)*
- Dimensioning should generally not appear in more than one place in the contract plans. Dimension duplication may create a problem if a dimension is changed on one detail and not another.
- The logical plan order is:

  General Plan
  Deck Contours
  Foundation Plan
  Abutments
  Bents
  Typical Section
  Girder Layout
  Girder Reinforcement
  Log of Test Borings

- Additional Plan Details and insertable Bridge Standards are generally placed after the Girder Reinforcement Sheet.
- If required, Structures Plans and/or Staging Plans are generally placed after the General Plan sheets.
- Other details, such as Camber Diagram, Longitudinal Section, Concrete Strength and Pay Limits, may be placed on the Girder Layout sheet or the Typical Section sheet if necessary. General notes may be placed on the Deck Contour sheet and the Index to Plans is placed on the General Plan.
- Leave a clear space 6" × 6"± on the General Plan for approximate quantities that will be placed by the Specifications & Estimates Branch.

- Overcrowding should be avoided. If all the details that normally appear on a particular sheet will result in overcrowding, use an additional sheet.
- Not adhering to these rules frequently results in change orders and/or claims against the State. ❖

# Lettering and Lettering Examples

**General**

All hand-drawn sheet titles should have the structure name and sheet title lettered in pencil with a VC 240 (Vertical Capitals) Wrico lettering guide. County, Route, Post Miles, Bridge Numbers, etc., may be done in the Reinhardt style freehand.

**Lettering Style**

Vertical or slant single stroke Gothic or Reinhardt style of lettering may be used. The lower case letters should be used for notes and statements on drawings; it is much easier to read than all capitals. Sheet titles in title blocks should be all capitals and vertical lettering. Detail titles should be all capitals and may be vertical or slanted lettering.

**Lettering Size**

Lettering height must be 5/32" minimum. Title blocks and detail titles should be 1/4" in height. Consideration should be given to future scale reductions. Equivalent lettering heights for CADD are 0.14" and 0.24".

*Note:* CADD lettering sizes and ratios between upper and lower case may vary slightly due to software capabilities.

**Vertical Single Stroke Gothic**

A B C D E F G H I J K L M N O P Q R S T U V W X Y Z &

a b c d e f g h i j k l m n o p q r s t u v w x y z

1 2 3 4 5 6 7 8 9 0

**Slant Single Stroke Gothic**

*A B C D E F G H I J K L M N O P Q R S T U V W X Y Z &*

*a b c d e f g h i j k l m n o p q r s t u v w x y z*

*1 2 3 4 5 6 7 8 9 0*

Reinhardt Style Lettering *

* Named after Charles W. Reinhardt who developed the lettering style. The body height of the lower-case letter is ⅔ the height of the capital letter. Ascenders are to extend to the cap line; descenders are to extend the same distance below the base line. ❖

# Stationing and Curve Data

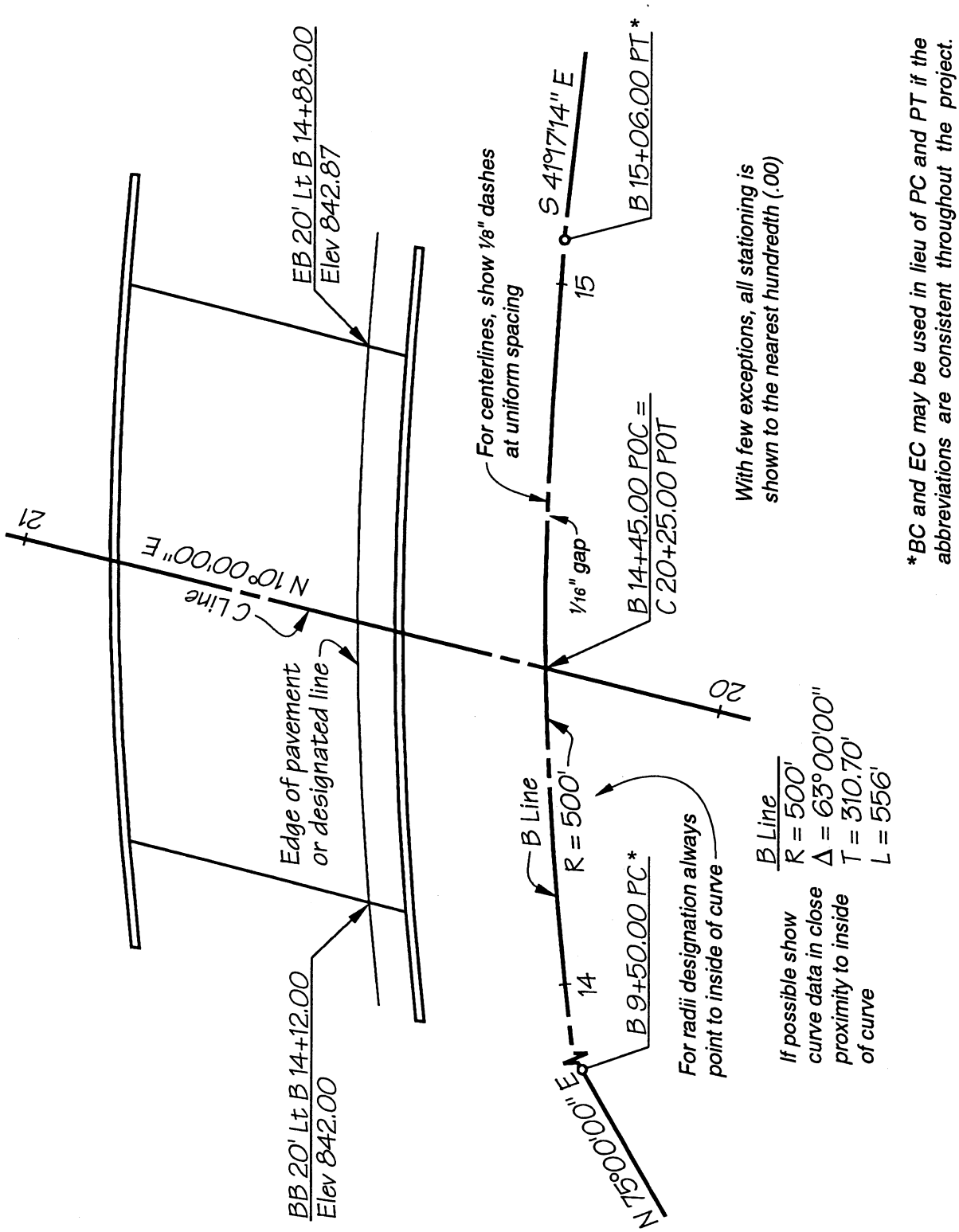


*BC and EC may be used in lieu of PC and PT if the abbreviations are consistent throughout the project.

# Dimensioning and Notations

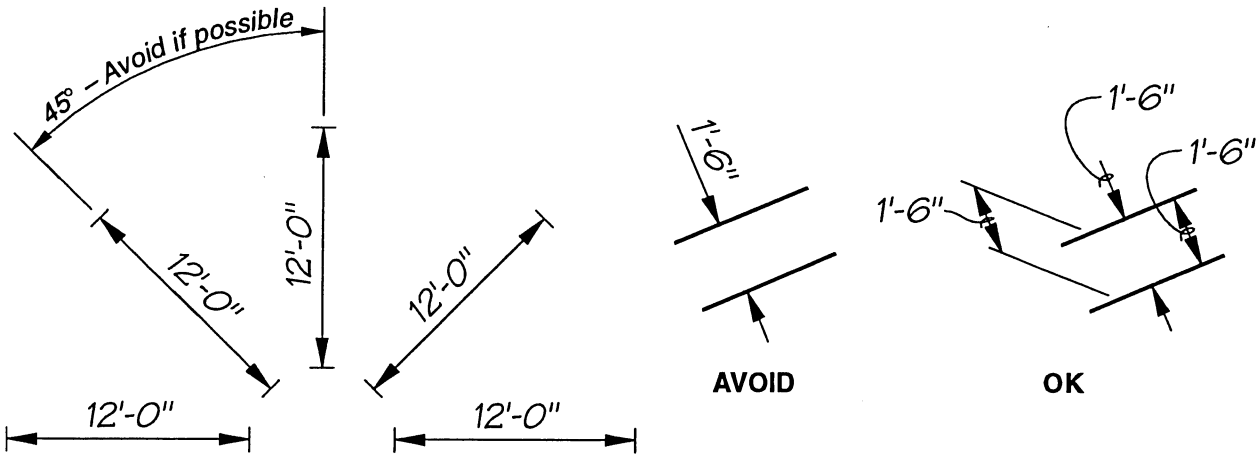


**Directions From Which Dimensions May Be Read**

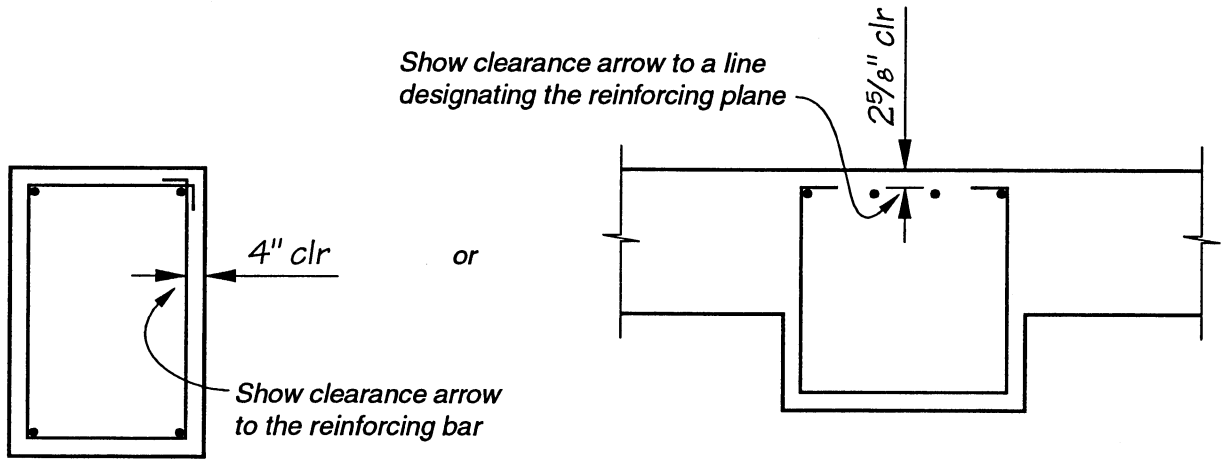


**Reinforcing Clearance Dimension**

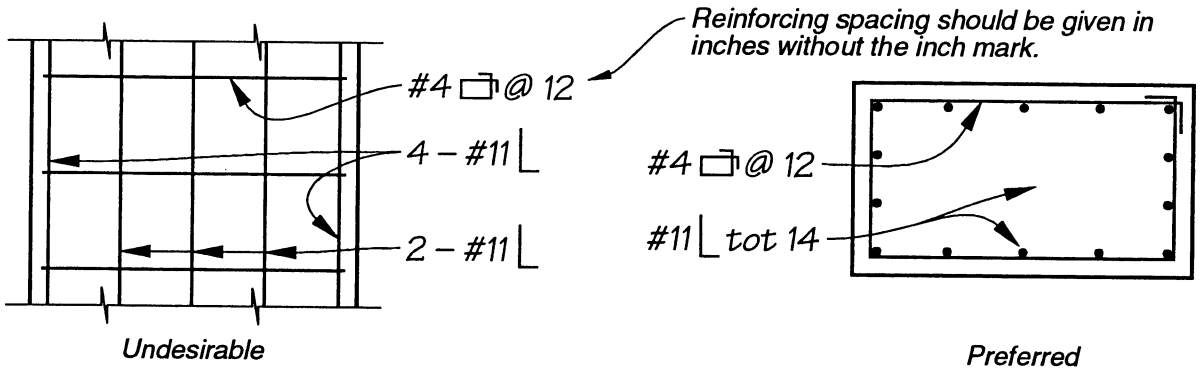


*It is generally more clear to show reinforcing in a section, as shown at right, rather than on an elevation.*

**Reinforcing In Two Planes**

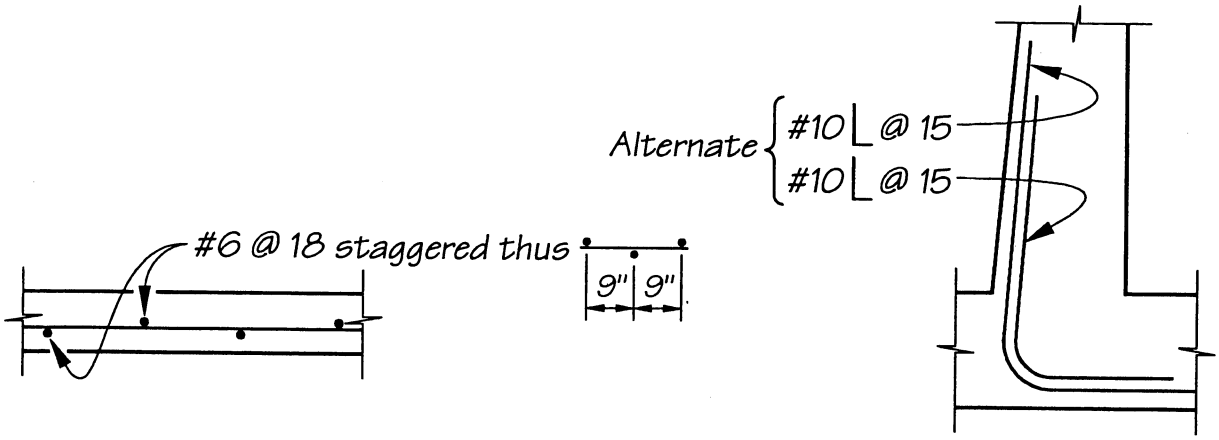


**Staggered and Alternate Bars**

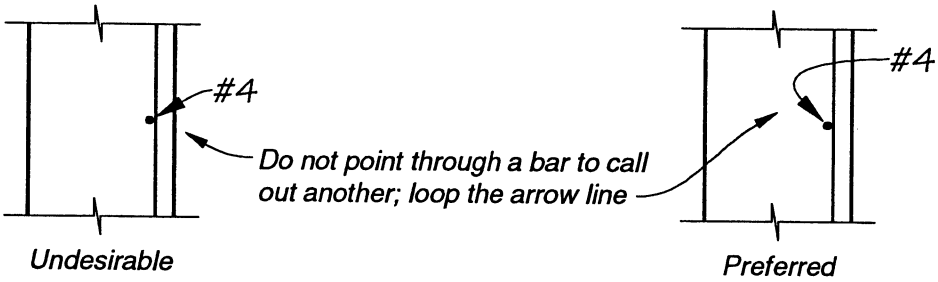


**Two Layers of Reinforcing**

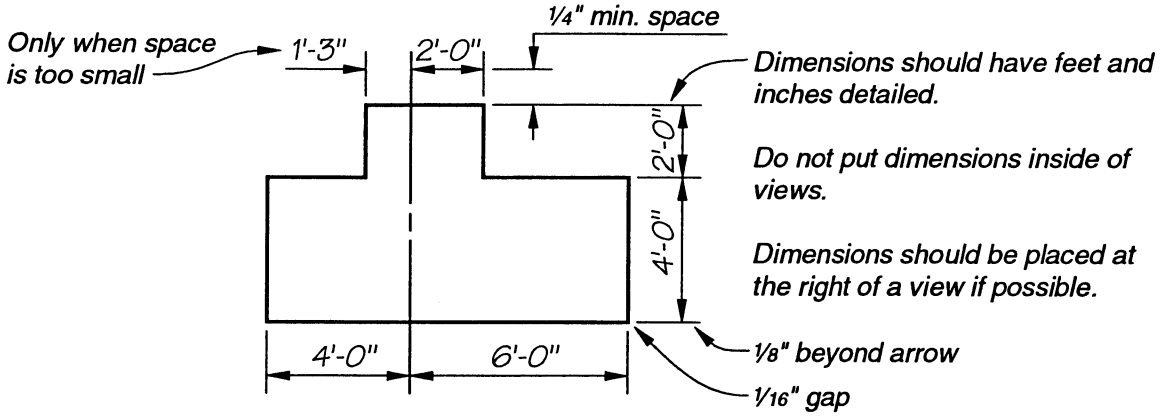


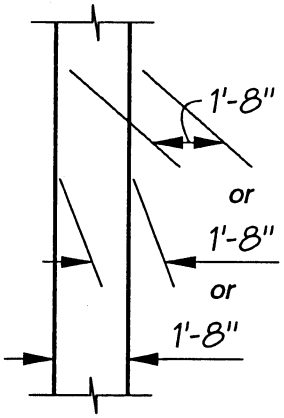


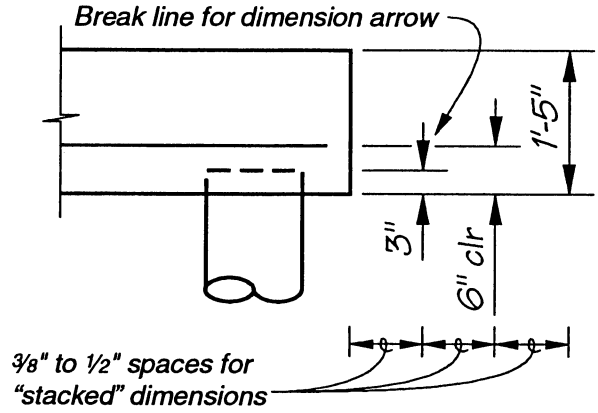


**Rectangular Views**

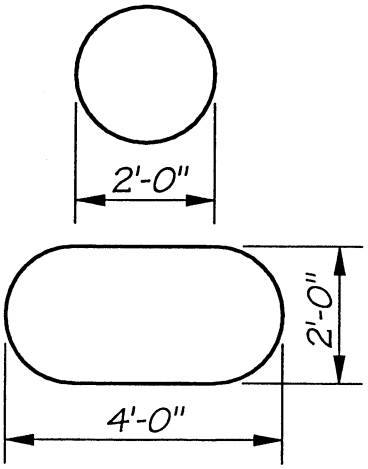


**Circular Sections**

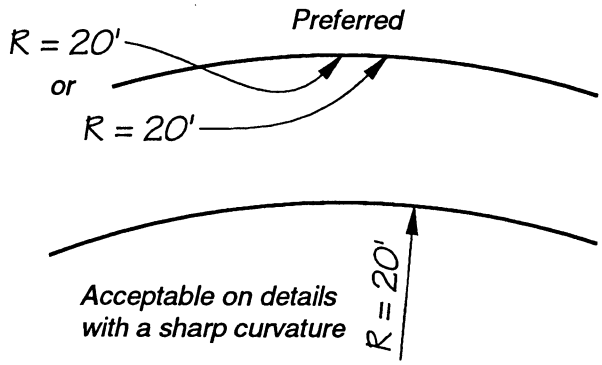


**Radii Designations**

**Circular Views**

*Structural steel shapes and lumber should be shown without the inch marks on the sizes.*

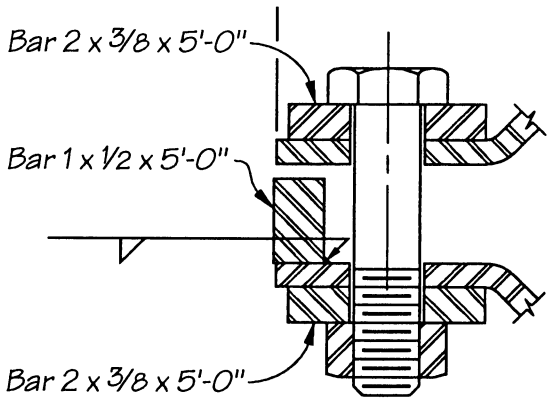


**Structural Steel Shapes**

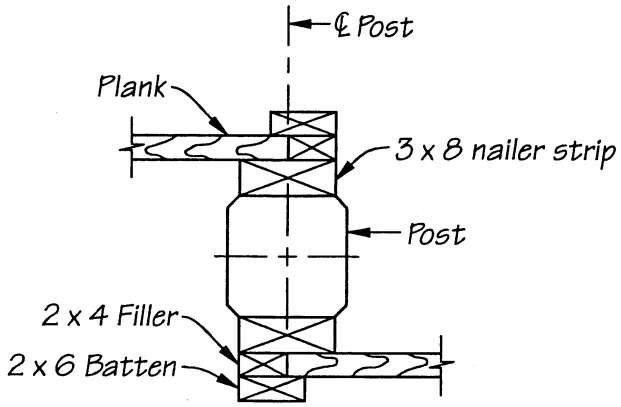


**Lumber**

# Section Hatching

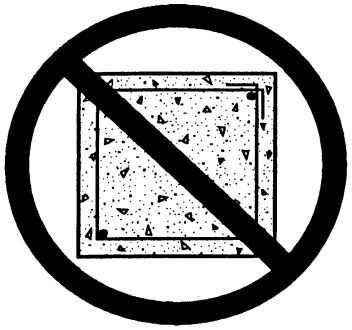

*Do not show the sand and aggregate in **any** concrete section.*

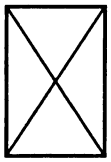

*Section of timber or lumber*

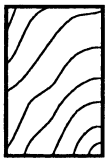

*End view of timber or lumber*

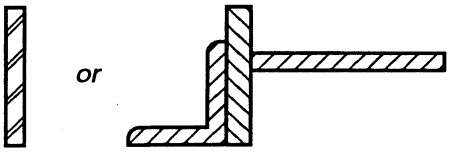


*Cross hatch metal in large scale (½" = 1'-0" or more) when 2 or more pieces are shown. Hatch alternate directions on pieces to clearly define limits.*

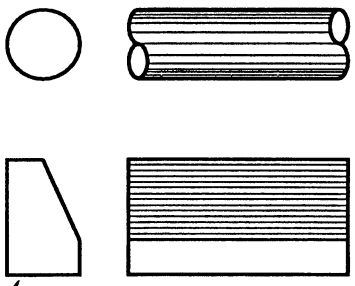

*Avoid shading lines on rounded or sloping surfaces. When needed to clarify a detail, space the shading lines a minimum of 1/16".*

*A section or view defines the shape more clearly than shading.*

# Detailing Tools

## Detailing Tools

Structure Design Sections have several tools available for use, they are:

- CADD workstations
- Highway curve sets
- Large triangles; a 45° and a 30°-60°-90°
- Steel straight edges; 30" to 42"

Structure Design also has several large radius curves. Other items available are planimeter, proportional dividers, beam compass, light table (Section 1), 48" and 72" spline and weights (Section 1).

Leroy lettering sets are available from Sections 1, 2, 4, 7, 10 and M&E. Other groups having Leroy equipment are Plan Production, Aesthetics and Models, Transit & Structure and Research.

In addition, section personnel have various tools on an individual basis:

- Drafting machines
- Electric erasers
- Mechanical drafting lead holders
- Wrico lettering guides – various sizes
- Circle templates – various sizes
- Engineering and Architect's scales

## To Find the Proper Highway Curve

To find the proper highway curve to use for a given radius and a desired scale use the following methods:

- Civil Engineers Scale (10, 20, 30 scale, etc.):
  Divide the radius by the scale —

  $$\frac{500' \text{ Radius}}{20 \text{ Scale}} = 25; \text{ Use a 25" radius curve.}$$

- Architects Scale (¼, ½, ¾ = 1'-0" scale):
  Multiply the radius by the scale —

  75' radius × ⅜ scale = 28.1; Use a 28" radius curve. ❖

# Decimal Equivalents

| Fraction of an Inch | Decimal of a Foot | | | | | | | | | | | |
|---|---|---|---|---|---|---|---|---|---|---|---|---|
| | 0" | 1" | 2" | 3" | 4" | 5" | 6" | 7" | 8" | 9" | 10" | 11" |
| 0 | 0 | 0.0833 | 0.1667 | 0.2500 | 0.3333 | 0.4167 | 0.5000 | 0.5833 | 0.6667 | 0.7500 | 0.8333 | 0.9167 |
| 1/16 | 0.0052 | 0.0885 | 0.1719 | 0.2552 | 0.3385 | 0.4219 | 0.5052 | 0.5885 | 0.6719 | 0.7552 | 0.8385 | 0.9219 |
| 1/8 | 0.0104 | 0.0938 | 0.1771 | 0.2604 | 0.3438 | 0.4271 | 0.5104 | 0.5938 | 0.6771 | 0.7604 | 0.8438 | 0.9271 |
| 3/16 | 0.0156 | 0.0990 | 0.1823 | 0.2656 | 0.3490 | 0.4323 | 0.5156 | 0.5990 | 0.6823 | 0.7656 | 0.8490 | 0.9323 |
| 1/4 | 0.0208 | 0.1042 | 0.1875 | 0.2708 | 0.3542 | 0.4375 | 0.5208 | 0.6042 | 0.6875 | 0.7708 | 0.8542 | 0.9375 |
| 5/16 | 0.0260 | 0.1094 | 0.1927 | 0.2760 | 0.3594 | 0.4427 | 0.5260 | 0.6094 | 0.6927 | 0.7760 | 0.8594 | 0.9427 |
| 3/8 | 0.0313 | 0.1146 | 0.1979 | 0.2813 | 0.3646 | 0.4479 | 0.5313 | 0.6146 | 0.6979 | 0.7813 | 0.8646 | 0.9479 |
| 7/16 | 0.0365 | 0.1198 | 0.2031 | 0.2865 | 0.3698 | 0.4531 | 0.5365 | 0.6198 | 0.7031 | 0.7865 | 0.8698 | 0.9531 |
| 1/2 | 0.0417 | 0.1250 | 0.2083 | 0.2917 | 0.3750 | 0.4583 | 0.5417 | 0.6250 | 0.7083 | 0.7917 | 0.8750 | 0.9583 |
| 9/16 | 0.0469 | 0.1302 | 0.2135 | 0.2969 | 0.3802 | 0.4635 | 0.5469 | 0.6302 | 0.7135 | 0.7969 | 0.8802 | 0.9635 |
| 5/8 | 0.0521 | 0.1354 | 0.2188 | 0.3021 | 0.3854 | 0.4688 | 0.5521 | 0.6354 | 0.7188 | 0.8021 | 0.8854 | 0.9688 |
| 11/16 | 0.0573 | 0.1406 | 0.2240 | 0.3073 | 0.3906 | 0.4740 | 0.5573 | 0.6406 | 0.7240 | 0.8073 | 0.8906 | 0.9740 |
| 3/4 | 0.0625 | 0.1458 | 0.2292 | 0.3125 | 0.3958 | 0.4792 | 0.5625 | 0.6458 | 0.7292 | 0.8125 | 0.8958 | 0.9792 |
| 13/16 | 0.0677 | 0.1510 | 0.2344 | 0.3177 | 0.4010 | 0.4844 | 0.5677 | 0.6510 | 0.7344 | 0.8177 | 0.9010 | 0.9844 |
| 7/8 | 0.0729 | 0.1563 | 0.2396 | 0.3229 | 0.4063 | 0.4896 | 0.5729 | 0.6563 | 0.7396 | 0.8229 | 0.9063 | 0.9896 |
| 15/16 | 0.0781 | 0.1615 | 0.2448 | 0.3281 | 0.4115 | 0.4948 | 0.5781 | 0.6615 | 0.7448 | 0.8281 | 0.9115 | 0.9948 |
| 1 | 0.0833 | 0.1667 | 0.2500 | 0.3333 | 0.4167 | 0.5000 | 0.5833 | 0.6667 | 0.7500 | 0.8333 | 0.9167 | 1.0000 |

| Fraction of an Inch | Decimal of an Inch | Fraction of an Inch | Decimal of an Inch |
|---|---|---|---|
| 0 | 0 | 9/16 | 0.5625 |
| 1/16 | 0.0625 | 5/8 | 0.6250 |
| 1/8 | 0.1250 | 11/16 | 0.6875 |
| 3/16 | 0.1875 | 3/4 | 0.7500 |
| 1/4 | 0.2500 | 13/16 | 0.8125 |
| 5/16 | 0.3125 | 7/8 | 0.8750 |
| 3/8 | 0.3750 | 15/16 | 0.9375 |
| 7/16 | 0.4375 | 1 | 1.0000 |
| 1/2 | 0.5000 | — | — |

# Useful Angles for Drafting Machines

| | Batter | Angle from Vertical |
|---|---|---|
| **Batters** | ½:12 | 2°25' |
| | ⅝:12 | 3°00' |
| | ¾:12 | 3°35' |
| | ⅞:12 | 4°10' |
| | 1:12 | 4°45' |
| | 1:4 | 14°29' |
| | 1:3 | 18°26' |
| | **Slope** | **Angle from Horizontal** |
| **Slopes** | ½:1 | 63°26' |
| | 1:1 | 45°00' |
| | 1½:1 | 33°42' |
| | 2:1 | 26°34' |
| | 3:1 | 18°26' |
| | 4:1 | 14°29' |
| | **Grade** | **Angle from Horizontal** |
| **Grades** | 1% | 0°34' |
| | 1½% | 0°52' |
| | 2% | 1°09' |
| | 2½% | 1°26' |
| | 3% | 1°43' |
| | 4% | 2°17' |
| | 5% | 2°52' |
| | 6% | 3°26' |
| | 7% | 4°00' |
| | 8% | 4°34' |
| | 9% | 5°09' |
| | 10% | 5°43' |
| | 11% | 6°17' |
| | 12% | 6°51' |
| | 12½% | 7°08' |
| | 15% | 8°32' |

# Pencil Drawings – Do's and Don'ts

## Do's

- Keep your table top and drafting tools clean.
- Dust off your drawings with a brush frequently to keep excess graphite from smearing.
- Keep your hands clean to avoid body oil from getting on tracings (it will hold dust).

  *NOTE:* Drafting powders are not a substitute for the above items; if anything, they reduce the cleanliness of your work and erase off the line work.
- Be careful when rubber stamps are used. They take a while to dry and set.
- Use only "Magic Mending" tape for cut-ins or tape-ons; it will not print, yellow, or dry out and peel.
- Be careful not to crease tracing paper; the crease breaks the translucency and will print.
- Keep all contours and line work on the front of the sheet.
- Remove pencil residue from the back of the sheet when a pencil drawing is traced.
- Make complete erasures on both sides to avoid "ghosts".
- Use consistent lead weight and line work in detailing each sheet (the original detailer making his own corrections will help this).
- Accept only good autopositives from Reproduction.
- Use a soft lead (at least "F") for corrections or additions to autopositive standards.

## Don'ts

- Do not use too soft or too hard of a lead. "H" and "F" are the weights most successfully used on tracing paper.
- Do not use "dot and dash" type lettering;

  i.e., *Avoid this type of lettering!*
- Do not put any shading on the backs of the sheets and avoid excess "shading" lines on the front of the sheets. ❖

# Project Plans made from Microfilm Enlargements

## General

When blowbacks from microfilm are used for contract plans the following procedures must be followed:

1. As Builts, used for information only, must have a statement to that effect noted in a conspicuous place. (See page 1-10.2.)

   When making up the "Index to Plans" indicate that this is an "As Built" drawing, thus:

   Abutment A4 38 ~ As Built

2. Old, or out of date, standards must have the top right-hand signatures, date, and standard plan sheet numbers removed and treated as a detail sheet with the Design Engineer's signature as with other detail sheets. Details need not be placed in new border format.

3. As Builts, used as detail sheets, should be re-photographed or cut-in to the present title block format and must be checked to see that details and nomenclature meets the present Standard Specifications and design criteria. ❖

# Abbreviations

## General Rules for Abbreviations

Abbreviations should not be used where the meaning may be in doubt. In case of doubt, it is best to spell out.

In general, it is considered best not to use conventional signs in the text of notes or in the general notes. For example, use 8 cu ft per sec rather than 8 cu ft/sec and 6 lb rather than 6#.

On the General Plan Sheet, avoid abbreviations. On the other sheets abbreviations may be used if necessary. See Appendix A for list of acceptable abbreviations.

## Omission of Periods

The omission of periods after abbreviations is recommended by the International Committee on Weights and Measures for metric units and is advocated by the American Standards Association Sectional Committee on scientific symbols and abbreviations which are not complete English words. The ASCE follows this practice while many publications do not. For example, 60 cu ft rather than 60 cu. ft.

The omission of periods saves time, labor, and space and does not reduce readability. Abbreviations that would spell out complete English words *must have* periods after them, such as in., figs., and no.

## Modifiers

Modifiers are hyphenated. For example, one 1½-in. bolt, 4-ft slab. Apostrophies are not recommmended. With very few exceptions, such as figs., and nos., etc., the abbreviation of the plural is the same as the singular. For example: 22 lb, 40 cu yd, 25 in., 30 ft, 70 gal., etc.

## Phrases Describing Work or Materials

When abbreviating a phrase describing work or material, the noun should be spelled out in full. Examples are:

CIDH conc piles;
CIP P/S concrete;
AC dike;
CL-6 fence.

Exceptions are very common items such as PSP and PCC, or other terms shown on Standard Plans A10A and B0-1.

## Titles and Title Blocks

Spell out all words in titles (i.e., write out: ELEVATION, PLAN, SECTION A-A, etc.) and in title blocks (see examples below). ❖

*NOTE:* Acceptable abbreviations e.g., OC, ST., AVE., etc., permitted when space is limited.

| BRIDGE NO. | SMITH AVENUE OVERCROSSING |
|---|---|
| POST MILE | GENERAL PLAN |

| BRIDGE NO. | SMITH AVENUE OVERCROSSING |
|---|---|
| POST MILE | TYPICAL SECTION |

| BRIDGE NO. | SMITH AVENUE OVERCROSSING |
|---|---|
| POST MILE | EXPANSION JOINT DETAILS |

# Sheet Title Blocks and Signature Blocks

*Typical Index Block with signature, registered Project Engineer No., and date. For Project Plan, Structure Plan, General Plan, Detail Sheets, and Bridge Standard Detail Sheets (XS Sheets).*

***NOTE:** Signatures made by hand must be in black ink.*

| DIST. | COUNTY | ROUTE | POST MILES TOTAL PROJECT | SHEET NO. | TOTAL SHEETS |
|---|---|---|---|---|---|
| | | | | | |

REGISTERED ENGINEER - CIVIL

REGISTERED PROFESSIONAL ENGINEER
Joe Engineer
No. 12345
Exp. 3-31-95
CIVIL
STATE OF CALIFORNIA

*Project Engineer*

PLANS APPROVAL DATE

*Typical Sheet Title Block. For Project Plan, Structure Plan, General Plan, and Detail Sheets.*

| BRIDGE NO. | WILLOW WOOD UNDERPASS |
|---|---|
| 10-20R | |
| POST MILE | GENERAL PLAN |
| 6.2 | |

DISREGARD PRINTS BEARING EARLIER REVISION DATES → 1-20-92

REVISION DATES (PRELIMINARY STAGE ONLY) — SHEET 1 OF 10

*Typical Signature Block. For Project Plan and General Plan.*

***NOTE:** Signatures made by hand must be in black ink.*

*Senior Bridge Engineer*

DESIGN ENGINEER

| | | |
|---|---|---|
| DESIGN | BY | CHECKED |
| DETAILS | BY | CHECKED |
| QUANTITIES | BY | CHECKED |

DS OSD 2139 (CADD 4/89)

*Typical Sheet Title Block. For Bridge Standard Detail Sheets (XS Sheets).*

| BRIDGE NO. | WILLOW WOOD UNDERPASS |
|---|---|
| 10-20R | SOUND WALL - WOOD PLANK |
| POST MILE | DETAILS NO. 1 |
| 6.2 | |

DISREGARD PRINTS BEARING EARLIER REVISION DATES → 1-20-92

REVISION DATES (PRELIMINARY STAGE ONLY) — SHEET ___ OF ___

*Typical Signature Block. For Bridge Standard Detail Sheets (XS Sheets).*

***NOTE:** Signatures made by hand must be in black ink.*

STANDARD DRAWING

| | | | | |
|---|---|---|---|---|
| FILE NO. XS 99-50 | DESIGN | BY Al Anderson | CHECKED Diane Dietz | APPROVAL RECOMMENDED BY |
| DRAWING DATE 2/92 | DETAILS | BY Bob Brown | CHECKED Ed Ellis | DESIGN SUPERVISOR |
| | SUBMITTED BY | Cindy Clark 12-91 | | |

DS OSD 2147A (CADD 5/89)

# Electronic Signatures (XS Sheets) Form DS-D-0005

## General

When a Bridge Standard Detail Sheet (XS Sheet) is created or revised permanently, a checkprint along with *Authorization for Use of Electronic Signature for Bridge Standard Detail Sheets (XS Sheets)* (Form DS-D-0005) will then be sent to the Design Supervisors for final approval and signatures before release. The original of this form (signed by the Design Supervisor) together with a reduced hard copy of the XS Sheet (signed by the Technical Committee Chairperson) will be kept by Technical Publications in a back-up data file.

## Form DS-D-0005

STATE OF CALIFORNIA • DEPARTMENT OF TRANSPORTATION

**AUTHORIZATION FOR USE OF ELECTRONIC SIGNATURE FOR BRIDGE STANDARD DETAIL SHEETS (XS SHEETS)**

DS-D-0005 (REV. 6/93)

The Technical Committee Chairperson has reviewed the following sheet and has authorized its release onto the CADD system.

I, the undersigned, on the date noted following my signature, hereby authorize my signature to be electronically placed on following Bridge Standard Detail Sheet (XS Sheet) and approves its release for use:

*(XS Number)* _____ *(Sheet Title)* _____

_____

_____ *Design Supervisor* _____ *Date*

Original – Technical Publications

DS 93 0011

# Revision Dates

## CADD Drawn Plan Sheets

On CADD generated plan sheets, a new revision date must be indicated every time a change is made to a sheet.

When all "Revision Date" boxes have been filled, go back to the first box and delete the old date. Replace the old date with the latest revision date, taking care to delete the date in the following box. See illustration below.

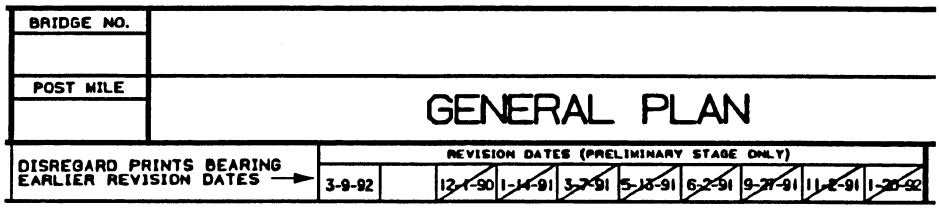


## Hand Drawn Plan Sheets

The "Revision Date" below the title block is to be entered the first time a sheet or set of plans is printed ①.

When additions or corrections are made the detailer must cross out, but not obliterate, the date.

If the last date entered is crossed out ②, a new date shall be entered at the time of the next printing ③. ❖

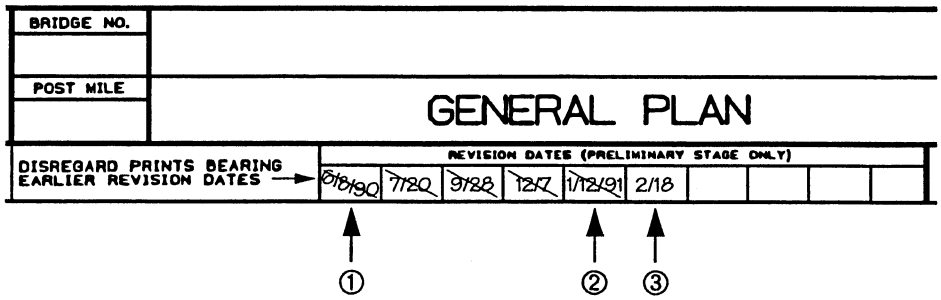


*NOTE:* This procedure applies to "Preliminary" stage only. See "Late Plan Changes," page 1-19.1 for subsequent revisions.

# Use of Standard Plans

**General**

The Department of Transportation issues a book of "Standard Plans" which includes Bridge Standard Plans. This book is an official part of the contract for all projects.

---

**When a Standard Plan is Revised Permanently (RSP) or When a New Standard Plan is Being Created (NSP)**

1. Initiator is responsible for obtaining approval from the Technical Committee prior to submittal to Technical Publications.
2. Send *Bridge Standard Detail Sheet/Standard Plan – Request For Revisions/ New Sheet* (Form DS-D0006) to Technical Publications with redline changes shown on a reduced copy of the Standard Plan.
3. When changes have been made, a checkprint will be returned to the initiator for approval. If approved or if more changes or corrections are needed, initiator returns checkprint to Technical Publications.
4. When changes are finalized and ready for release or re–release, the initiator will be notified.
5. FHWA approval is required for both new and revised Standard Plans. Approval will be obtained by Technical Publications.

---

**When a Standard Plan is Modified for a Specific Project Only**

If a detail shown on a Standard Plan sheet is to be modified or replaced, a new detail will be drawn on a regular plan sheet with the modifications and the following note. (See example below.)

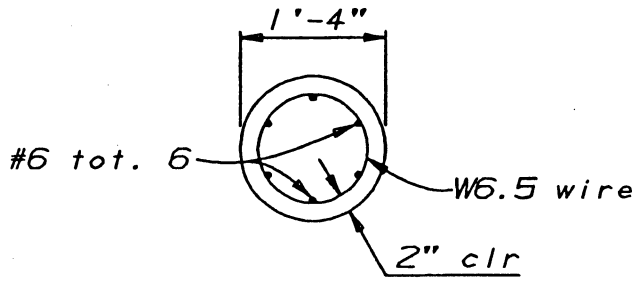


SECTION A-A

$\frac{3}{4}$" = 1'-0"

NOTE: This special detail supersedes "Section A-A" on Sheet No. BO-13, page 128, of the Standard Plans dated July 1992.

Form DS-D0006

STATE OF CALIFORNIA • DEPARTMENT OF TRANSPORTATION

**BRIDGE STANDARD DETAIL SHEET (XS SHEET) / STANDARD PLAN – REQUEST FOR REVISIONS / NEW SHEET**

DS-D0006 (REV. 11/92)

| INITIATOR | PHONE NO. | DATE |
|---|---|---|
| | | |

SHEET NO *(if new XS Sheet, Sheet No. will be assigned by Technical Publications)*

TITLE OF SHEET

*Instructions:*

1. *Initiator is responsible for obtaining approval from the Technical Committee prior to submittal to Technical Publications.*
2. *Send this request to Technical Publications with redline changes shown on a reduced copy of the Bridge Standard Detail Sheet (XS Sheet) or Standard Plan.*
3. *When changes have been made, a checkprint will be returned to the initiator for approval. If approved or if more changes or corrections are needed, initiator returns checkprint to Technical Publications.*
4. *When changes are finalized and ready for release or re-release, the initiator will be notified.*
5. *FHWA approval is required for both new and revised Standard Plans. Approval will be obtained by Technical Publications.*

☐ Revision to Bridge Standard Detail Sheet (XS Sheet) ☐ Revision to Standard Plan (RSP)

☐ New Bridge Standard Detail Sheet (XS Sheet) ☐ New Standard Plan (NSP)

REMARKS OR INSTRUCTIONS:

| TECHNICAL COMMITTEE CHAIRPERSON'S APPROVAL | DATE |
|---|---|
| | |

Check appropriate box (Revision to Standard Plan or New Standard Plan) and provide all information. ❖

# Use of Bridge Standard Detail Sheets (XS Sheets)

## General

Bridge Standard Detail Sheets are plans which are used repetitively and therefore are more economical to print from a master copy rather than to detail it individually. It is the responsibility of the designer to insure that the standard used is compatible with the design and details of a specific structure. These sheets are inserted in the contract plans as detail sheets and are signed by the Project Engineer.

---

## When a Bridge Standard Detail Sheet is "Created"

1. After obtaining approval from the Technical Committee, the initiator is required to submit an APOLLO CADD drawing along with a *Bridge Standard Detail Sheet (XS Sheet)/Standard Plan – Request for Revisions/ New Sheet* (Form DS-D-0006) to Technical Publications. Technical Publications will then assign an XS number to the new sheet.

   *IMPORTANT:* When the APOLLO CADD drawing is created, the standard default settings for weights, pen number, text, etc., ***must*** be used. For standard default settings see *Anvil 5000 Digitizing Tablet Cross Reference Manual.*

2. A checkprint will be returned to the initiator for approval. If changes are needed the initiator will return a checkprint to Technical Publications, showing redline changes or corrections. If approved, the initiator will return the checkprint to Technical Publications with a signature indicating that it is okay.

3. A checkprint along with *Authorization for Use of Electronic Signature for Bridge Standard Detail Sheets (XS Sheets)* (Form DS-D-0005, see page 1-13.1) will then be sent to the Design Supervisors for final approval and signatures before release. When changes are finalized and ready for release the initiator will be notified.

---

## When a Bridge Standard Detail Sheet is Revised Permanently

1. Initiator is responsible for obtaining approval from the Technical Committee prior to submittal to Technical Publications.

2. Send the *Bridge Standard Detail Sheet (XS Sheet)/Standard Plan – Request for Revisions/New Sheet* (Form DS-D-0006) to Technical Publications with redline changes shown on a reduced copy of the Bridge Standard Detail Sheet.

3. When changes have been made, a checkprint will be returned to the initiator for approval. If approved or if more changes or corrections are needed, initiator returns checkprint to Technical Publications.

4. A checkprint along with *Authorization for Use of Electronic Signature for Bridge Standard Detail Sheets (XS Sheets)* (Form DS-D-0005, see page 1-13.1) will then be sent to the Design Supervisors for final approval and signatures before release. When changes are finalized and ready for release the initiator will be notified.

---

**When a Bridge Standard Detail Sheet is Modified for a Specific Project Only**

Bridge Standard Detail Sheets which require modifications to make them compatible with the details for a specific job will be prepared with the detail sheets for a specific job and considered as job details. These sheets should include the following information:

1. Revisions will be indicated by a diamond shaped symbol (◇) placed near the revised portion of the detail. A revision number will be placed inside the diamond. (Example: ◇2.) Consecutively numbered diamonds will be used to indicate multiple changes.

2. Corresponding symbols and brief explanations will be placed in the box at bottom left center.

3. The drawing date will be removed and the word "Revised" added.

4. Add "Special Details" directly above the bridge title block.

5. If more than one revised Bridge Standard Detail Sheet is needed for any particular job, the revision numbers (Example: ◇1, ◇2, etc.) shall begin anew with each revised sheet.

Modifications that basically change a pay item, (such as fences or railing) must be accompanied by a change in identification of that item, since the change automatically cancels the standard classification.

---

**Latest Standards**

It is the responsibility of the Project Engineer preparing the plans to see that the latest Bridge Standard Detail Sheets are incorporated into the plans at the time they are sent to headquarters. If you have a paper copy of any of the Bridge Standard Detail Sheets, you will be able to check the date of the sheet by choosing the XS SHEETS icon on the ANVIL PROJECT MANAGER. The "created" date should match the release date on the Bridge Standard Detail Sheet. If these dates do not match, then your paper copy is an older version than that on the APOLLO and should be replaced.

---

Form DS-D-0006

STATE OF CALIFORNIA • DEPARTMENT OF TRANSPORTATION

**BRIDGE STANDARD DETAIL SHEET (XS SHEET) / STANDARD PLAN – REQUEST FOR REVISIONS / NEW SHEET**

DS-D-0006 (REV. 11/92)

| INITIATOR | PHONE NO. | DATE |
|---|---|---|
| | | |

SHEET NO. *(If new XS Sheet, Sheet No will be assigned by Technical Publications)*

TITLE OF SHEET

*Instructions:*

1. *Initiator is responsible for obtaining approval from the Technical Committee prior to submittal to Technical Publications.*
2. *Send this request to Technical Publications with redline changes shown on a reduced copy of the Bridge Standard Detail Sheet (XS Sheet) or Standard Plan.*
3. *When changes have been made, a checkprint will be returned to the initiator for approval. If approved or if more changes or corrections are needed, initiator returns checkprint to Technical Publications.*
4. *When changes are finalized and ready for release or re-release, the initiator will be notified.*
5. *FHWA approval is required for both new and revised Standard Plans. Approval will be obtained by Technical Publications.*

☐ Revision to Bridge Standard Detail Sheet (XS Sheet) ☐ Revision to Standard Plan (RSP)

☐ New Bridge Standard Detail Sheet (XS Sheet) ☐ New Standard Plan (NSP)

REMARKS OR INSTRUCTIONS:

| TECHNICAL COMMITTEE CHAIRPERSON'S APPROVAL | DATE |
|---|---|
| | |

DS 93 0012

Check appropriate box (Revision to Bridge Standard Detail Sheet or New Bridge Standard Detail Sheet) and provide all information.

# Use of CADD Patterns or Components

**CADD Pattern/CADD Component**

A CADD pattern (ANVIL Version 1.2) or a CADD component (beginning with ANVIL Version 2.1) is a predrawn detail that can be used effectively to reduce drafting time, checking time, and to provide uniformity of often-used details.

A list and examples of patterns or components can be found in the *Anvil 5000 Digitizing Tablet Cross Reference Manual.*

Addition, modification, or deletion of patterns or components should be coordinated through the appropriate Design Committee and submitted to the Structure's CADD Services section for implementation. ❖

# Transmittal of Project Plan Sets to Headquarters Office Engineer at Expedite

**General**

The Design section of origin is responsible for preparing one (1) set of trimmed original* bond (CADD) drawings (see note below) with holes drilled for transmittal to the Specifications Section. The Specifications and Estimates Branch will make XEROX bond copies (with drilled holes) of the General Plan(s) after quantity decal is affixed and signed by the specifications engineer. Any copying thereafter will be done by the Planning Coordination Section. Original drawings will not be returned to the design section of origin.

The full-size plan sets transmitted by the Planning Coordination Section to Headquarters Office Engineer at Expedite will be as follows:

---

**For Projects with Federal Aid**

- 1 set with drilled holes *
- 2 sets without drilled holes **

---

**For Projects without Federal Aid**

- 1 set with drilled holes *
- 1 set without drilled holes **

---

This procedure replaces the previous procedure of sending one (1) set of "enhanced" vellums to Office Engineer at Expedite. ❖

---

*NOTE:* Penciled drawings or any drawing containing "sticky-back" decals will not be accepted if mixed in with the original bond (CADD) drawings. These drawings shall be replaced with XEROX (3080 or 5080) bond copies to make up the original set.

---

* Trimmed-to-size, full size bond (CADD) drawings. The drilled hole shall be placed 6" from the left edge and between the top edge and the drawing border of each sheet.

**Trimmed-to-size, full size bond (XEROX 3080 or 5080). Stamp "COPY" at right edge and between the top edge and the drawing border of each sheet.

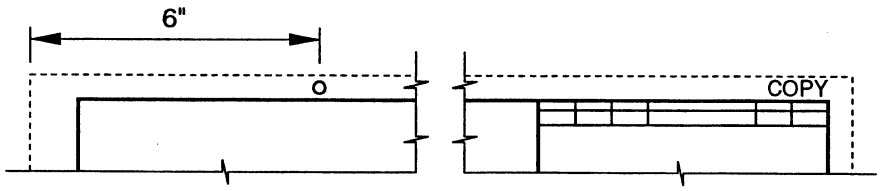

# Late Plan Changes

## Transmitting Late Plan Changes

Occasionally, it may be necessary to revise plans after they have been sent to Office Engineer, but before they have been advertised. If this situation occurs, new plan sheet(s) must be prepared by the design section, reviewed by the specifications engineer, then sent to Office Engineer with Form DS-D0144 *(Changes To Contract Drawings)* illustrated on page 1-20.4.

## Changes Before Advertising

*No changes* will be made to project plan sheets after they have been forwarded to the Office Engineer as part of the PS&E package without the *approval* of the *Project Engineer* from the Design Section involved. To assure that no unauthorized changes are made, Office Engineer personnel in charge of project plans will not allow anyone access to the project plans without this approval.

When changes are made to the project plans, it will be necessary to inform the Project Specifications Engineer so that he/she can meet their responsibility of making the Special Provisions and Engineers Estimate consistent with the plans.

## Changes After Advertising and Before Bid Opening

In order to be sure that all bidders have the same contract plan sheet, *no revisions* shall be made on project plans between the time the prints are made for *advertising* and the bid opening, *except* when a formal addendum is issued. An addendum to contract plans, if required, is coordinated by the Bridge Specifications and Estimates Engineer.

During this period, requests to obtain the original project plans must include authorization from the Bridge Specifications and Estimates Engineer. ❖

# Revisions to Contract Plans

**Changes After Approval (CCO)**

The original contract plan sheets may not be retrieved after Bid Opening and before the contract is approved.

The original contract plan sheets are microfilmed immediately following the approval of the contract and are sent to the Documents Unit where they will then be available for revisions by Contract Change Order (CCO). Sheets needing revisions must be retrieved from the Document Unit using Form DS-D0144 (*Changes to Contract Drawings*) illustrated on page 1-20.4.

> *NOTE:* In all cases, the original contract plan sheets will not be released to the design sections until a reproducible vellum is printed and placed in the original set of plans by the Documents Unit . This will insure that a complete set of reproducible plans is available at all times. It is *not permissible* to modify CADD generated drawings as revisions to contract plans without notifying the Documents Unit.

---

**Revising, Supplementing or Adding Contract Plan Sheets**

These changes may be by either:

1. Revisions
   (a) Partial revisions *(adding, deleting, or revising existing details, text, etc.)*; or,
   (b) Total replacement of the original contract plan sheets.

2. Supplemental sheets *(additional information to supplement existing plans).*

3. Additional sheets *(new project plan sheet covering information not in the scope of the original contract plans).*

When revisions to a sheet or additional or supplemental sheets are applicable to more than one bridge, each bridge shall have its own sheet.

---

**Revisions to or Replacement of Original Contract Plan Sheets**

## PARTIAL REVISIONS

Partial revisions to the original contract plan sheets shall be made as illustrated on the example on page 1-20.5. Each revision to the original plan sheet must be clearly marked by an equilateral triangle placed near the revision. An identifying number placed within the triangle will refer to a revision block for identification. Like revisions in different places on the sheets shall bear the same number; unlike revisions shall be num-

bered consecutively. Patterns of the revision block are available in CADD library (Pattern No. 53).

The identifying number, a short description of the revision, the initials of the persons making and checking it and the dates shall be recorded in a revision block preferably placed in the lower right-hand corner of the sheet. The block may be manipulated if necessary to record subsequent revisions. See example on page 1-20.5.

Add the letter "R" and a number after the sheet number in the upper right hand title block. For example, the first revision to original sheet 68 becomes 68R1. When sheet 68R1 is to be revised, it shall be treated in the same manner as the original sheet, and the sheet number revised to read 68R2. The numbers following "R" will not necessarily correspond with the number in the triangles because it is quite possible that 2 or more revisions can be made each time. See example on page 1-20.8.

Place the "pattern" for the Contract Change Order No. just above, or as near as possible to, the sheet title block. Do not fill in the blanks for change order number or sheet number; they will be added by Structure Construction when the Change Order is prepared.

Do not revise the date or signature in the upper right-hand corner of the sheet.

Do not change Office Engineer "Total Sheets" number at top of revised sheet.

Upon completion of the revisions, the Design Engineer will forward the revised contract plan sheets to the Documents Unit. The Documents Unit will order reproductions for all interested parties and return the revised contract plan sheets to the vault for holding until the project is completed.

## TOTAL REPLACEMENT OF CONTRACT PLAN SHEETS

The sheet replacing a contract plan sheet is prepared in the same manner as a usual contract plan sheet. A note identifying the sheet it replaces shall be placed as shown on the example on page 1-20.6. Number the sheets in the same manner as "PARTIAL REVISIONS" (upper right-hand corner). The Project Engineer will sign or obtain approval signatures and add the approval date*.

* "Plans Approval Date" is the same date as shown on the original contract plan drawing.

Place the pattern for the Contract Change Order No. just above, or as near as possible to, the sheet title block. Do not fill in the blanks for change order number or sheet number; they will be added by Structure Construction when the Change Order is prepared.

The identifying data from the original sheet should be completely filled in on the replacement sheet. This will enable everyone concerned to readily identify the job to which the sheet belongs.

Add the District, County, Route, Post Miles and sheet numbers at the top of the sheet. Normally, in the preparation of plans, the data above is left partially incomplete to be filled in by Office Engineer. A replacement sheet does not follow the same procedure. Unless it is completely filled in, it may cause confusion and lost time during routine handling after it leaves the Division of Structures.

Upon completion of the replacement sheet, the Design Engineer will forward the sheet through the Design Supervisor to the Documents Unit. The Documents Unit will order reproductions for all interested parties after which the replacement sheet will be returned to the vault for holding until the project is completed.

---

## Supplemental Sheets

A supplemental sheet is prepared in the same manner as a usual contract plan sheet. Place the sheet number being supplemented in the box provided in the upper right-hand corner. This number must be suffixed with the letter "S", e.g. 68S, etc. Signature block and title block shall be prepared in the same manner as a usual contract plan sheet. Place "Supplemental Sheet" in the lower right-hand corner, immediately above the title block matching project title text. See example on page 1-20.7.

Subsequent revisions can be made to a supplemental sheet in the same manner as for a revision to an original sheet. After a revision is made on a supplemental sheet, the sheet number would then become 68S R1, etc. See example on page 1-20.8.

All identifying sheet data, including "change order" pattern, and approval shall be handled as in "total replacement of original contract plan sheet."

---

## Additional Sheets

These sheets shall be handled the same as a Supplemental Sheet, except they shall follow the last sheet of the particular structure (usually the Log of Test Borings) and carry the same sheet number as the sheet they follow with the suffix of a letter. The first additional sheet will be A, the second

B, etc. (i.e., 68A, 68B). Revisions to added sheets will be handled in a manner similar to Supplemental Sheets (i.e., 68A R1). See example on page 1-20.8. ❖

Form DS-D0144

STATE OF CALIFORNIA • DEPARTMENT OF TRANSPORTATION
**CHANGES TO CONTRACT DRAWINGS**
DS-D0144 (REV. 10/92)

| DESCRIPTION OF PROJECT | | | |
|---|---|---|---|
| REQUESTOR | SECTION | PHONE NUMBER | DATE |
| DIST-CO-RTE-PM | BRIDGE NUMBER | BRIDGE NAME | |
| SOURCE | CHARGE | EA OR CONTRACT NUMBER | |

The following sheets have been replaced...

| SHEET NUMBER | TITLE |
|---|---|
| | |
| | |
| | |
| | |
| | |
| | |
| | |
| | |
| | |
| | |
| | |
| | |

| SIGNATURE OF PROJECT ENGINEER OR PROJECT ARCHITECT | SIGNATURE OF SPECIFICATIONS ENGINEER |
|---|---|
| | |

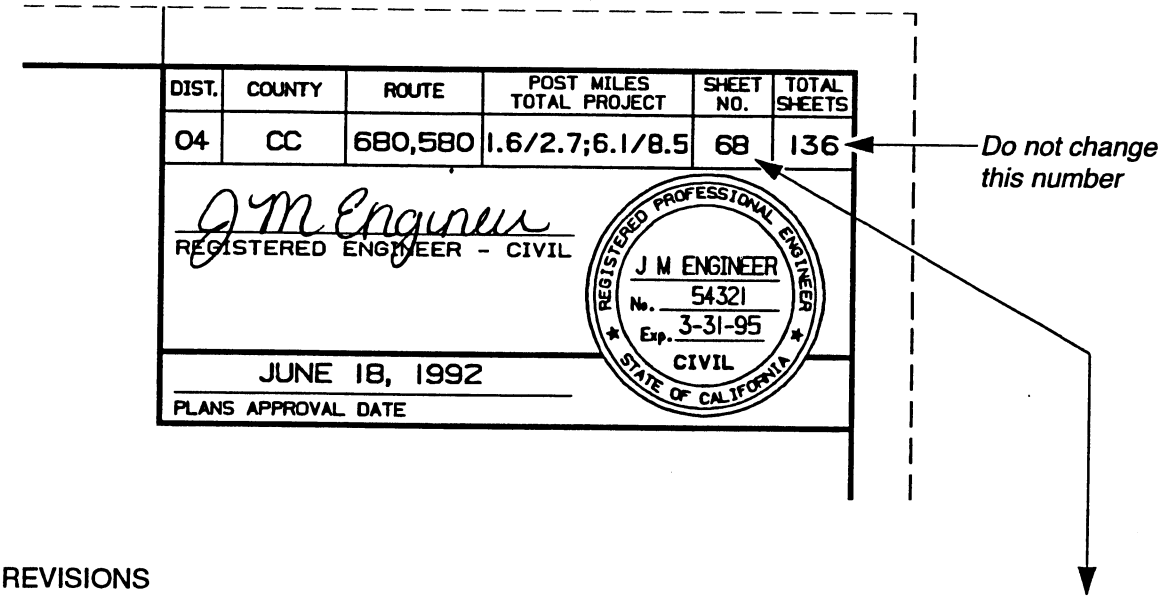


1. REVISIONS

   a) Revision to original contract plan sheets ..... 68 R1
      Subsequent revisions to contract plan sheets ..... 68 R2, etc.

   b) Total replacement of a contract plan sheet ..... 68 R1
      - Add this note at top of sheets:

        "This sheet replaces Sheet No. 68 of 136 of plans approved June 18, 1992"

2. SUPPLEMENTAL SHEETS

   Addition of supplemental sheet ..... 68 S
   - Add "Supplemental Sheet" above the lower right-hand title block.

   Revision of a supplemental sheet ..... 68 S R1

3. ADDITIONAL SHEETS

   Additional sheets ..... 68 A
   Revisions to additional sheets ..... 68 A R1

# As-Built Plan Corrections

## General

After a project has been completed in the field, Division of Construction is required to supply the Office of Structure Design (OSD) with an updated copy of the project plans. Usually, a blue-line print is sent to Design that reflects all on-the-job changes that were made during construction. These "As-Built" corrections must be made to the original set of plans as well.

## Instructions for Making As-Built Corrections to Original Contract Vellums

The Structures Document Unit will placed the stamp shown below on each sheet of plans sent to OSD by Construction. The plans will then be sent to the Section Supervisor of the Design Section that designed the projects.

AS BUILT

CORRECTIONS BY _____

CONTRACT NO. _____

DATE _____

- Enter the name of the field person making the corrections, the Contract No., and the date shown on the field corrections, in the spaces indicated on the above sample.
- The detailer who transfers the corrections to the original vellums will also place his or her initials, and the date he or she transfers the corrections, on the "As-Built" stamp opposite those of the field person's entry.
- The Design Section will copy the corrections onto the original set of plans, as soon as possible, since bridge plans have to be coordinated with road plans for photographing and integration into the Administrative Services' record system.
- Use an "F" or softer lead pencil.
- All As-Built corrections shall be done with pencil by hand.

*IMPORTANT:* Do not use CADD for As-Built corrections.

- Do not make any erasures on the original vellums. On data that is deleted, draw a line through the data in such a manner that it will not be obliterated.

  Example:

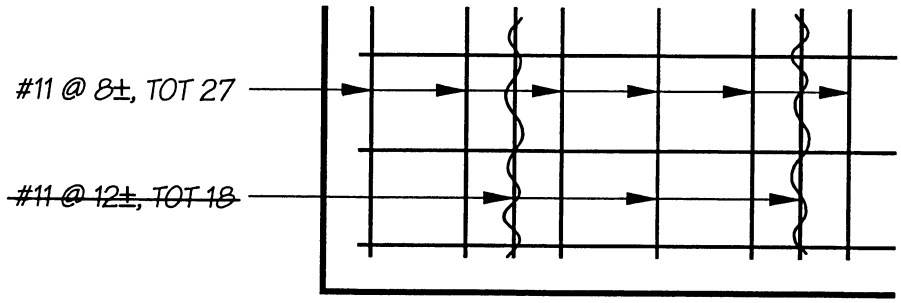


- No corrections shall be made to the Log of Test Borings vellum. When the maximum, minimum, and average pile tip elevations appear on the Log of Test Borings sheet, they shall be transferred to the General Plan vellum.
- If no corrections are shown on a sheet, a stamp or decal indicating "No As-Built Changes" shall be placed above the correction stamp (see example below).

**NO AS BUILT CHANGES**

- After As-Built corrections have been completed, return the original vellums, along with the "As-Builts" sent by Construction, to the Structures Document Unit. ❖