DIST	COUNTY	ROUTE	KILOMETER POST TOTAL PROJECT	SHEET NO.	TOTAL SHEETS
08	SBd	62			

T. B. Sample
REGISTERED CIVIL ENGINEER

PLANS APPROVAL DATE

REGISTERED PROFESSIONAL ENGINEER TO B. SAMPLE No. 999999 Exp. 3-31-00 CIVIL STATE OF CALIFORNIA

Fly-by-Night Engineering
123 Third Street
Willow Creek, CA 95567

The State of California or its officers or agents shall not be responsible for the accuracy or completeness of electronic copies of this plan sheet.

Caltrans Metric

Notes:

1. Paint "Bridge No 54-624"
2. Paint "Main Street OC"
3. Bearing S81° 56'13" E
4. Structure Approach Slab Type N(9S)
5. Structure Mounted Sign, see "Road Plans"

Point of min vert clearance

Denotes existing structure to be removed at stage 2

Denotes new construction

For General Notes, see "Foundation Plan" sheet. All dimensions are in meters unless otherwise shown.

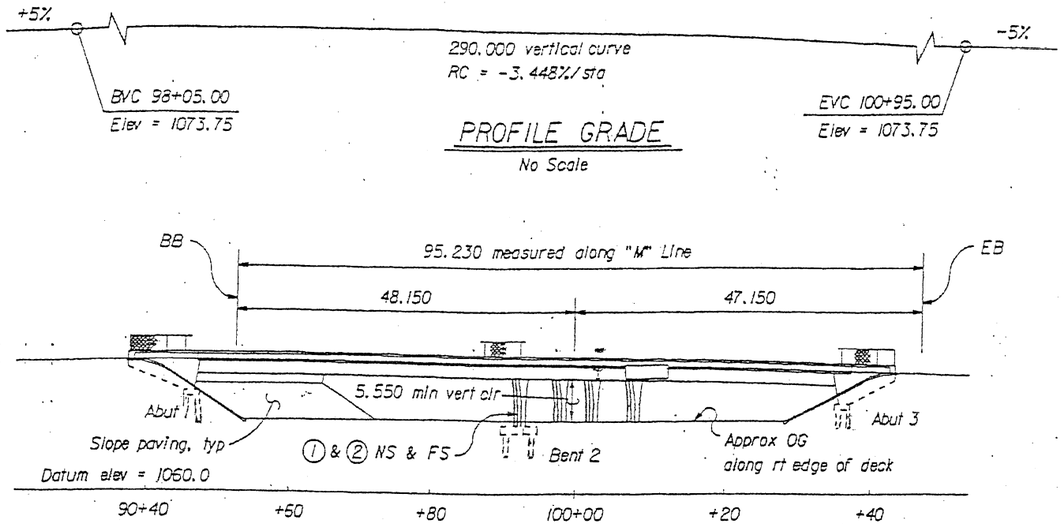

ELEVATION
1: 400

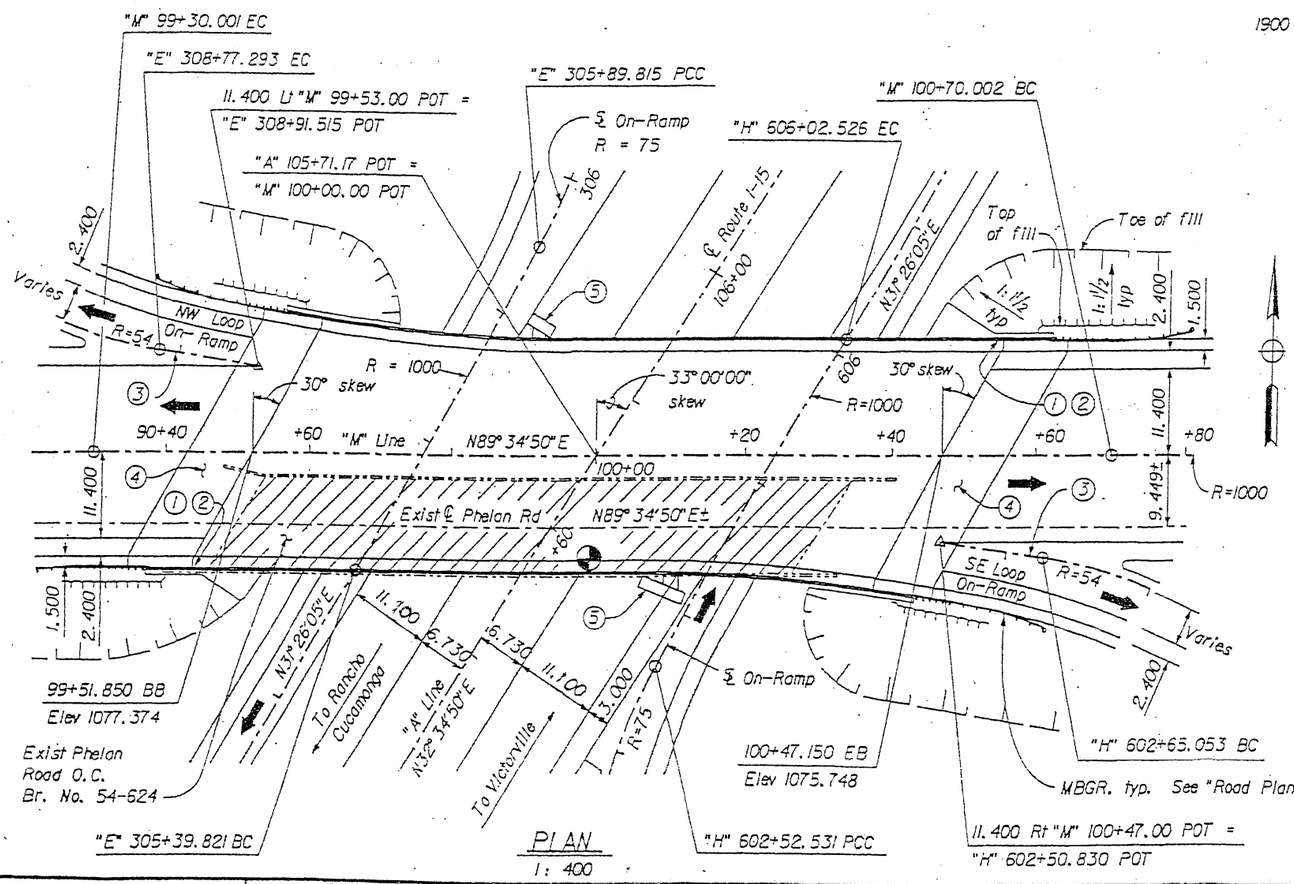

PLAN
1: 400

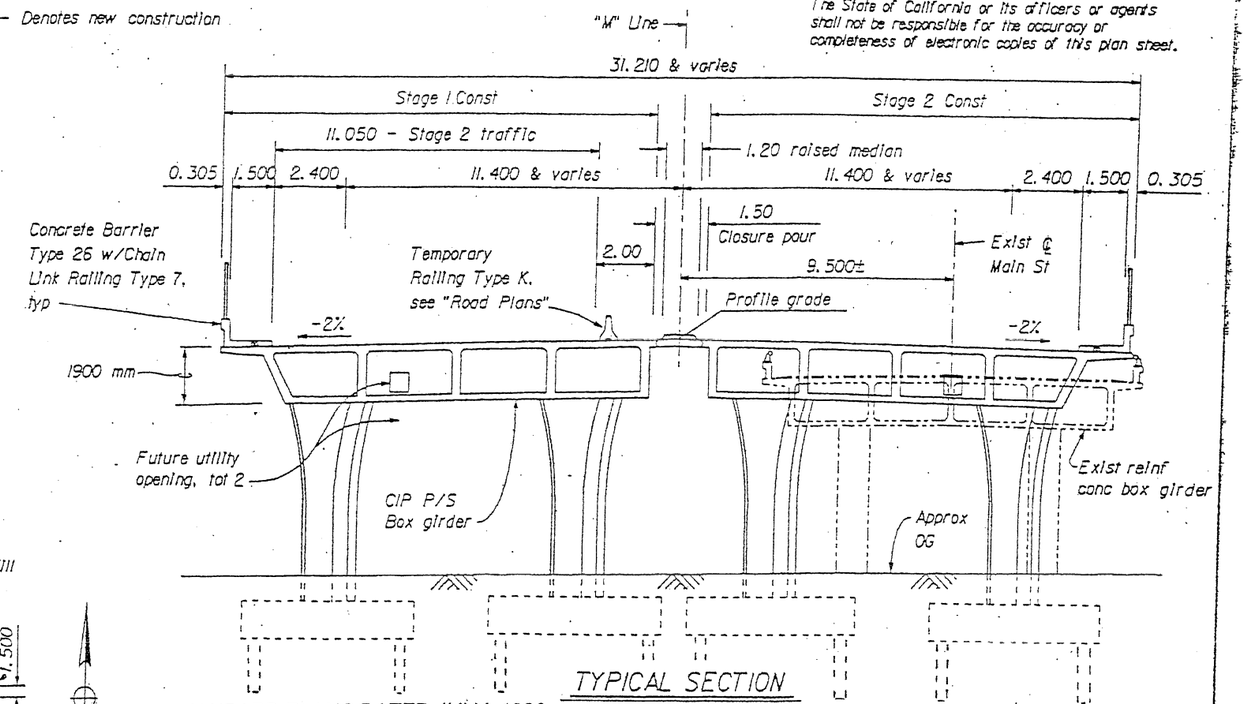

TYPICAL SECTION
1: 100

STANDARD PLANS DATED JULY, 1999 AND ERRATUM NO. 99-1

Sheet No.	Title
A10A	Abbreviations
A10B	Symbols
A62C	Limits of Payment For Excavation And Backfill Bridge
B0-1	Bridge Details
B0-3	Bridge Details
B0-5	Bridge Details
B0-13	Bridge Details
B7-1	Box Girder Details
B7-10	Utility Opening Box Girder
B8-5	Cast-In-Place Prestressed Girder Details
B11-52	Chain Link Railing Type 7
B11-54	Concrete Barrier Type 26
B2-5	Pile Details
B2-8	Pile Details
B14-5	Soffit Access Opening

Standard plan sheet no.

Detail no.

INDEX TO PLANS

Sheet No.	Title
1	General Plan
2	Deck Contours
3	Foundation Plan
4	Abutment Layout
5	Abutment Details No. 1
6	Abutment Details No. 2
7	Bent Layout
8	Bent Details
9	Typical Section
10	Girder Layout No. 1
11	Girder Layout No. 2
12	Miscellaneous Details
13	Joint Seal Assembly-Maximum Movement Rating=100
14	Structure Approach Type N(9S)
15	Structure Approach Drainage Details
16	Slope Paving - Full Slope
17	Log of Test Borings
18	As-Built Log of Test Borings

DESIGN OVERSIGHT	DESIGN	BY I. B. Engineer	CHECKED B. A. Checker	LOAD FACTOR DESIGN	LIVE LOADING: HS20-44 AND ALTERNATIVE AND PERMIT DESIGN LOAD		
	DETAILS	BY I. B. Engineer	CHECKED B. A. Checker	LAYOUT	BY I. B. Engineer	CHECKED B. A. Checker	
SIGNOFF DATE	QUANTITIES	BY H. P. Calc	CHECKED B. A. Checker	SPECIFICATIONS	BY I. Rightum	PLANS AND SPECS COMPARED I. Readum	

PREPARED FOR THE STATE OF CALIFORNIA DEPARTMENT OF TRANSPORTATION

TO B. SAMPLE
PROJECT ENGINEER

BRIDGE NO. 54-624
KILOMETER POST 46.7

MAIN STREET OVERCROSSING
GENERAL PLAN

Pile Data - 625C or Class 900C Piles (Alt X only)						
Location	Pile Type	Design Loading kN (Service Load)	Nominal Resistance Compression (kN)	Nominal Resistance Tension (kN)	Design Tip Elevations	Specified Tip Elevations
Abut 1	Class 625C (Alt X)	500	1000	0	601.98 (1) 611.23 (3)	601.98
Bent 2	Class 900C (Alt X)	500	1000	0	599.50 (1) 608.71 (3)	599.50
Abut 3	Class 625C (Alt X)	525	1050	0	601.98 (1) 610.62 (3)	601.98

Design Tip Elevation is controlled by the following demands:
(1) Compression; (2) Tension; (3) Lateral Capacity.

DIST	COUNTY	ROUTE	KILOMETER POST TOTAL PROJECT	SHEET NO.	TOTAL SHEETS
08	SBd	62			

T. B. Sample
REGISTERED CIVIL ENGINEER

PLANS APPROVAL DATE

REGISTERED PROFESSIONAL ENGINEER TO B. SAMPLE No. 999999 Exp. 3-31-00 CIVIL STATE OF CALIFORNIA

Fly-by-Night Engineering
123 Third Street
Willow Creek, CA 95567

The State of California or its officers or agents shall not be responsible for the accuracy or completeness of electronic copies of this plan sheet.

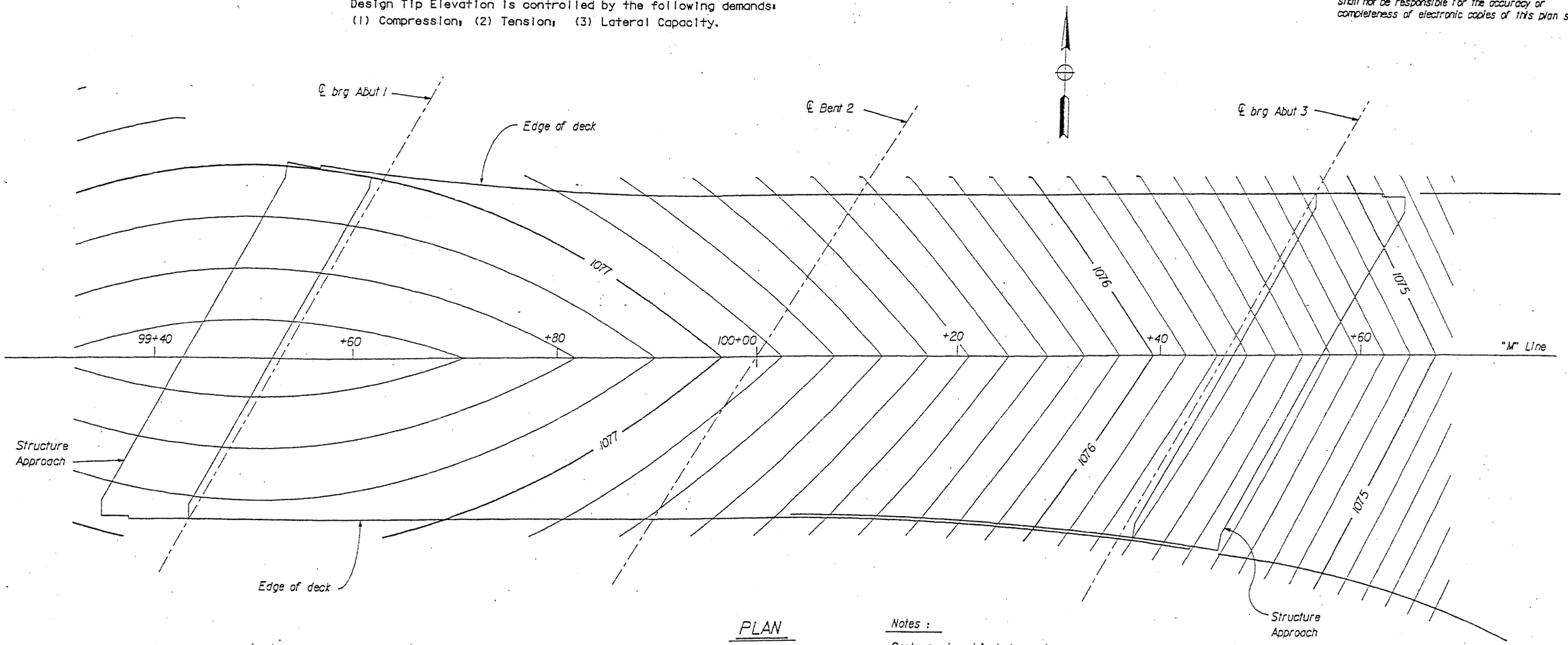

PLAN
1: 200

Notes :

Contours do not include camber.

Contour interval is 0.10

All dimensions are in meters unless otherwise shown

DESIGN OVERSIGHT		DESIGN	BY I. B. Engineer	CHECKED B. A. Checker	PREPARED FOR THE STATE OF CALIFORNIA DEPARTMENT OF TRANSPORTATION	TO B. SAMPLE PROJECT ENGINEER	BRIDGE NO. 54-624	MAIN STREET OVERCROSSING
SIGNOFF DATE		DETAILS	BY I. B. Engineer	CHECKED B. A. Checker			KILOMETER POST 46.7	DECK CONTOURS
		QUANTITIES	BY H. P. Calc	CHECKED B. A. Checker				

DIST	COUNTY	ROUTE	KILOMETER POST TOTAL PROJECT	SHEET NO.	TOTAL SHEETS
08	SBd	62			

T. B. Sample
REGISTERED CIVIL ENGINEER

PLANS APPROVAL DATE

REGISTERED PROFESSIONAL ENGINEER TO B. SAMPLE No. 999999 Exp. 3-31-00 CIVIL STATE OF CALIFORNIA

Caltrans Metric

Fly-by-Night Engineering
123 Third Street
Willow Creek, CA 95567

The State of California or its officers or agents shall not be responsible for the accuracy or completeness of electronic copies of this plan sheet.

BENCH MARK

DESIGNATION	ELEVATION	DESCRIPTION
F1047HESP BM	1069.349	32.535M left of Sta 104+86.121 N 602922.9749 E 2056885.1763
C.P. 5	1064.047	1" I.P. with plastic cap - "C.P.", 162.182m left of Sta 107+99.755 N 603237.3033 E 2058975.4002

Datum : USC & GS sea level of 1929

FALSEWORK RELEASE

ALTERNATIVE 1:

Falsework shall be released as soon as permitted by the specifications. Closure pour shall not be placed sooner than 60 days after the falsework has been released.

ALTERNATIVE 2:

Falsework shall not be released less than 28 days after the last concrete has been placed. Closure pour shall not be placed sooner than 14 days after the falsework has been released.

When Falsework Release Alternative 2 is used, camber values are 0.75 times those shown.

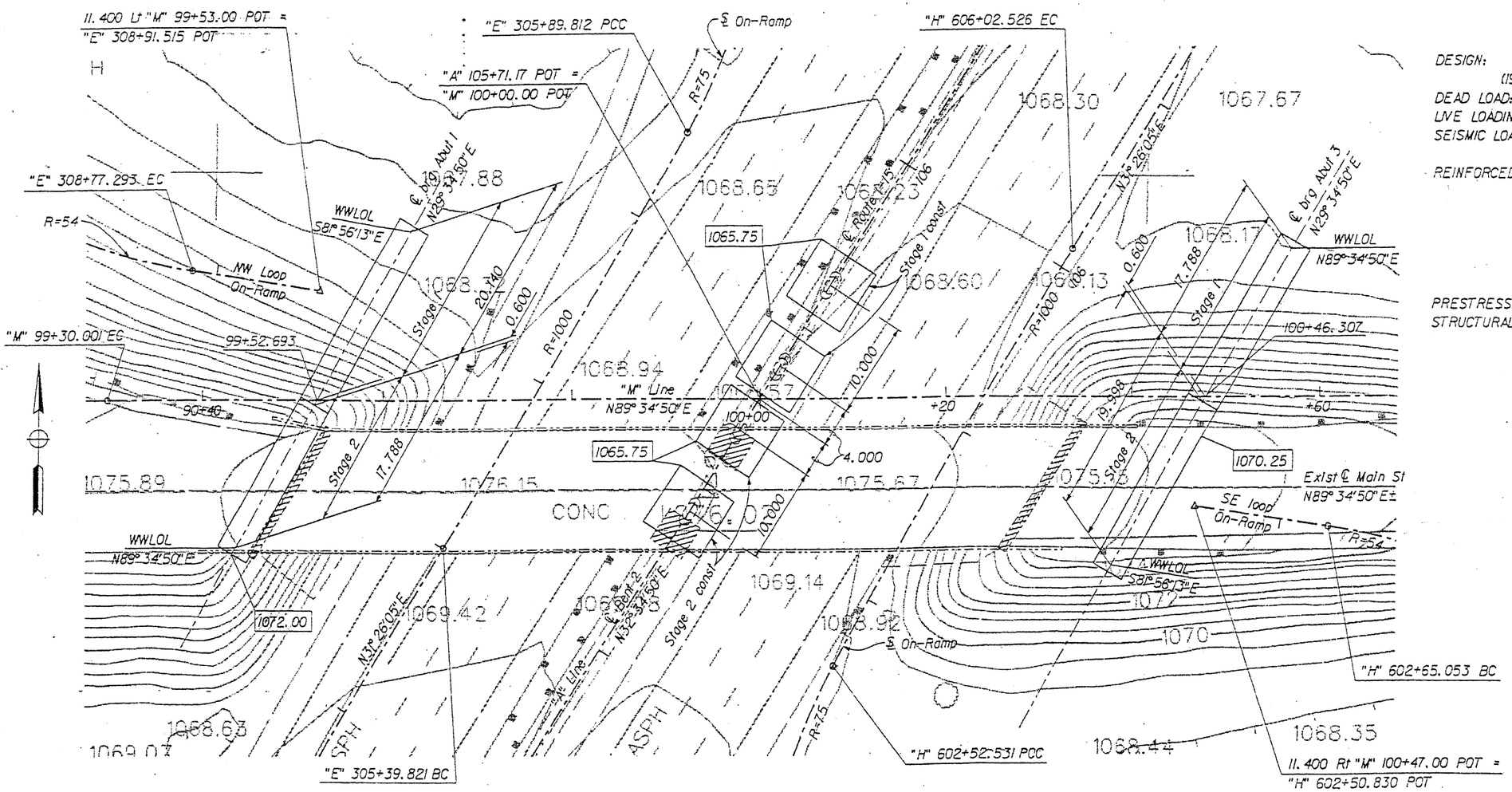

PLAN
1: 250

GENERAL NOTES
LOAD FACTOR DESIGN

DESIGN: BRIDGE DESIGN SPECIFICATIONS (1983 AASHTO with Interims and Revisions by CALTRANS)

DEAD LOAD: Includes 1700 Pa for future wearing surface.

LIVE LOADING: HS20-44 and alternative and permit design load.

SEISMIC LOADING: Peak Rock Acceleration = 0.5g
Depth of Alluvium = > 46M

REINFORCED CONCRETE: f_y = 420 MPa
f'_c = 25 MPa
n = 9
Transverse deck slabs (Working Stress Design)
f_s = 140 MPa
f_c = 8 MPa
n = 10

PRESTRESSED CONCRETE: See "Prestressing Notes"

STRUCTURAL STEEL: fy = 245 MPa

Notes :

Denotes bottom of footing elevation.

Denotes exist footings to be removed.

All dimensions are in meters unless otherwise shown.

DESIGN	BY I. B. Engineer	CHECKED B. A. Checker	
DETAILS	BY I. B. Engineer	CHECKED B. A. Checker	
QUANTITIES	BY H. P. Calc	CHECKED B. A. Checker	

PREPARED FOR THE STATE OF CALIFORNIA DEPARTMENT OF TRANSPORTATION

TO B. SAMPLE
PROJECT ENGINEER

BRIDGE NO. 54-624
KILOMETER POST 46.7

MAIN STREET OVERCROSSING
FOUNDATION PLAN

DESIGN OVERSIGHT
SIGNOFF DATE

ORIGINAL SCALE IN MILLIMETERS

DISREGARD PRINTS BEARING

REVISION DATES (PRELIMINARY STAGE ONLY)

SHEET OF

APPROVAL DATE
PROFESSIONAL
DEPT

DIST	COUNTY	ROUTE	KILOMETER POST TOTAL PROJECT	SHEET NO.	TOTAL SHEETS
08	SBd	62			

T. B. Sample
REGISTERED CIVIL ENGINEER

PLANS APPROVAL DATE

PROFESSIONAL ENGINEER REGISTERED TO B. SAMPLE No. 999999 Exp. 3-31-00 CIVIL STATE OF CALIFORNIA

Fly-by-Night Engineering
123 Third Street
Willow Creek, CA 95567

The State of California or its officers or agents shall not be responsible for the accuracy or completeness of electronic copies of this plan sheet.

Caltrans Metric

Notes:

For sections A-A & B-B, see "Abutment Details No. 1" sheet

All dimensions are in millimeters unless otherwise shown

LEGEND

[1] 450 x 600 x 87.5 fiber reinf elastomeric brg pad or
407 x 508 x 87.5 steel reinf elastomeric brg pad

[2] 500 x 800 x 87.5 fiber reinf elastomeric brg pad or
458 x 640 x 87.5 steel reinf elastomeric brg pad.

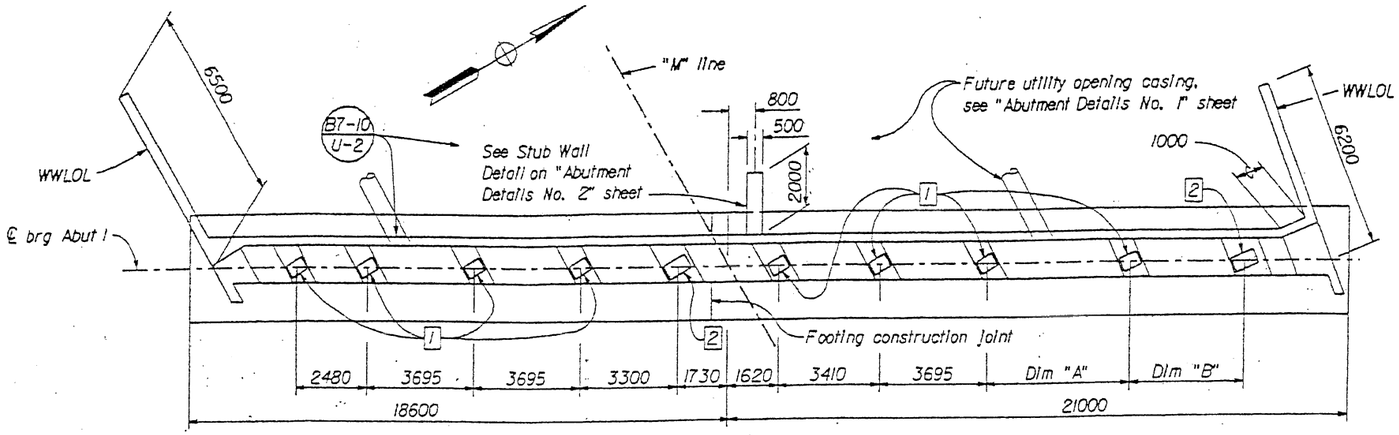

PLAN
1 : 100

Abutment 1 shown. Abutment 3 similar by 180° rotation except the stub wall which shall be located 800 mm left of "M" Line for both abuts.

Bearing Pad Layout

Location	Dim "A"	Dim "B"
Abut 1	4920	3770
Abut 3	4850	3700

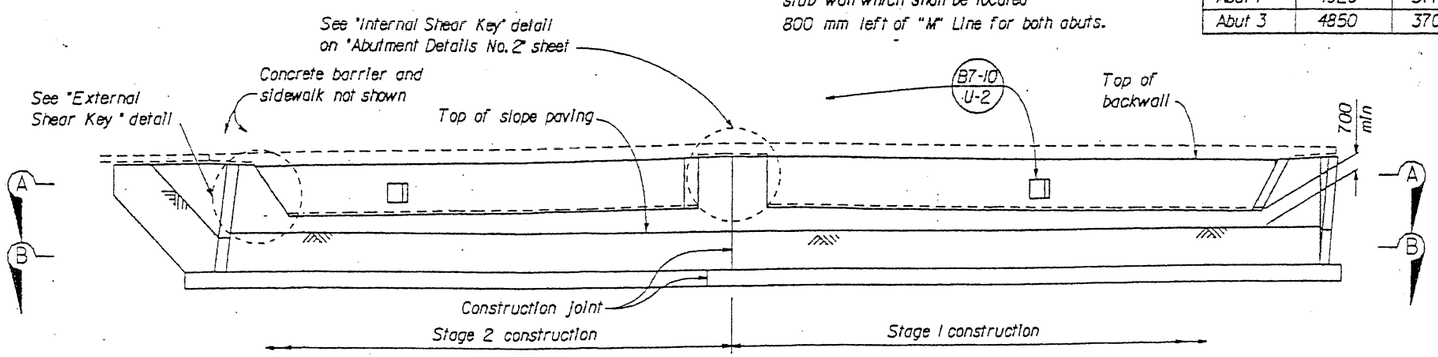

ELEVATION
1 : 100

B0-3
3-2

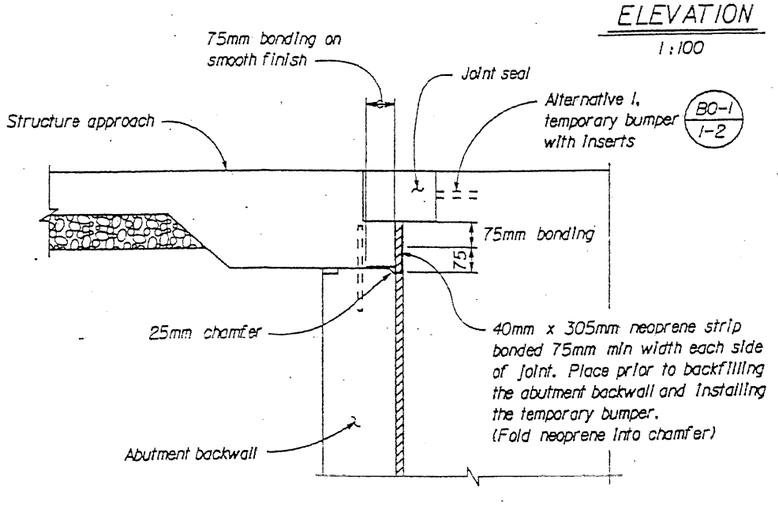

JOINT PROTECTION DETAIL
No Scale

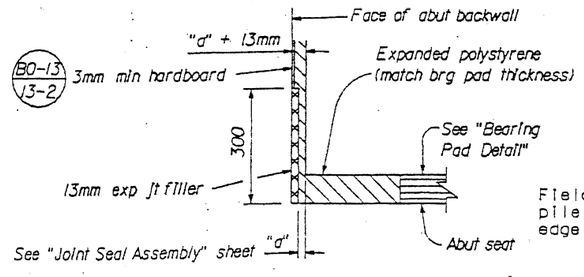

DETAIL C
No Scale

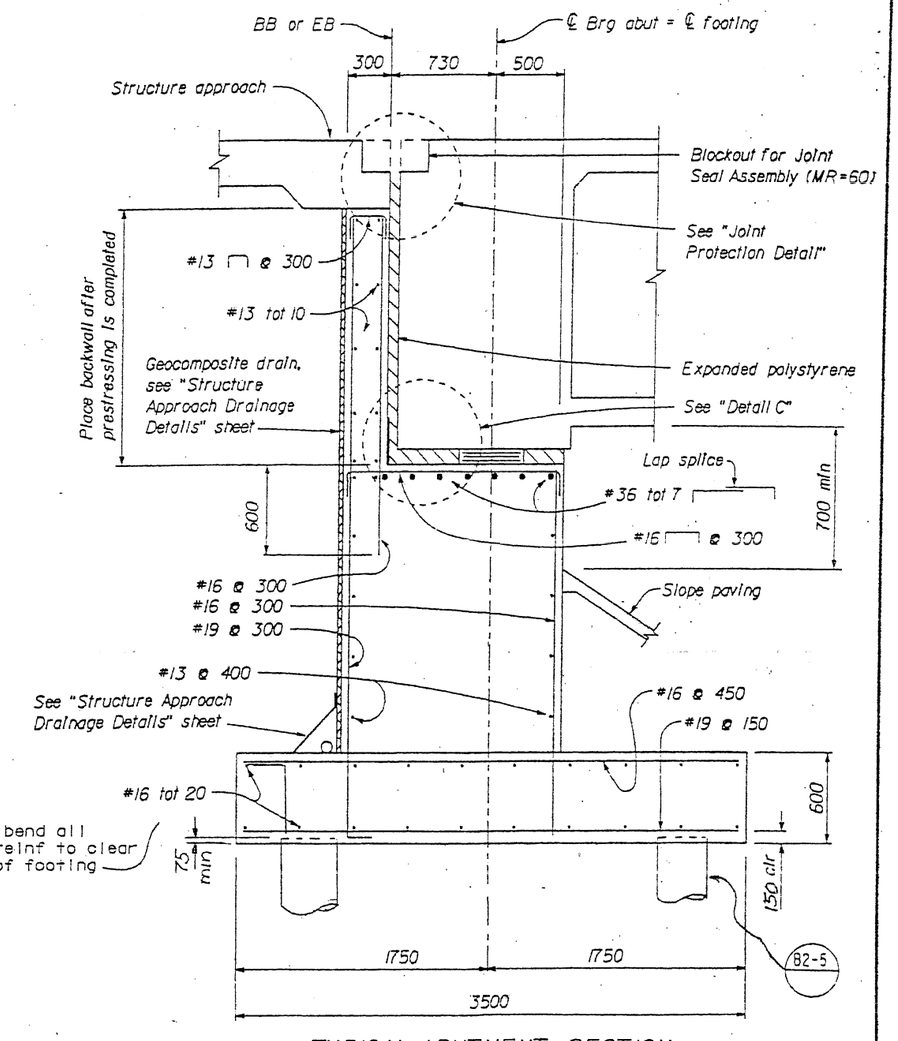

TYPICAL ABUTMENT SECTION
1 : 20

DESIGN OVERSIGHT		DESIGN	BY I. B. Engineer	CHECKED B. A. Checker	PREPARED FOR THE STATE OF CALIFORNIA DEPARTMENT OF TRANSPORTATION
SIGNOFF DATE		DETAILS	BY I. B. Engineer	CHECKED B. A. Checker	
		QUANTITIES	BY H. P. Calc	CHECKED B. A. Checker	

TO B. SAMPLE
PROJECT ENGINEER

BRIDGE NO. 54-624
KILOMETER POST 46.7

MAIN STREET OVERCROSSING
ABUTMENT LAYOUT

ORIGINAL SCALE IN MILLIMETERS

CU:

DISREGARD PRINTS BEARING EARLIER REVISION DATES

REVISION DATES (PRELIMINARY STAGE ONLY)

SHEET 4 OF 18

DIST	COUNTY	ROUTE	KILOMETER POST TOTAL PROJECT	SHEET NO.	TOTAL SHEETS
08	SBd	62			

I. B. Sample
REGISTERED CIVIL ENGINEER

PLANS APPROVAL DATE

REGISTERED PROFESSIONAL ENGINEER TO B. SAMPLE No. 999999 Exp. 3-31-00 CIVIL STATE OF CALIFORNIA

Fly-by-Night Engineering
123 Third Street
Willow Creek, CA 95567

The State of California or its officers or agents shall not be responsible for the accuracy or completeness of electronic copies of this plan sheet.

Caltrans Metric

Notes :

All dimensions are in millimeters unless otherwise shown

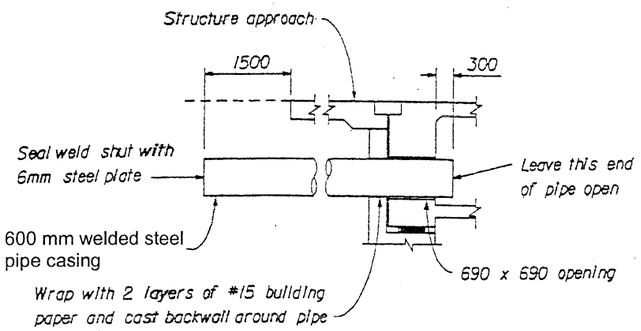

FUTURE UTILITY OPENING CASING

1:50

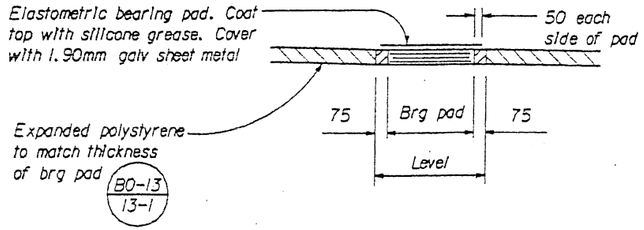

PART ELEVATION - BEARING PAD

1:20

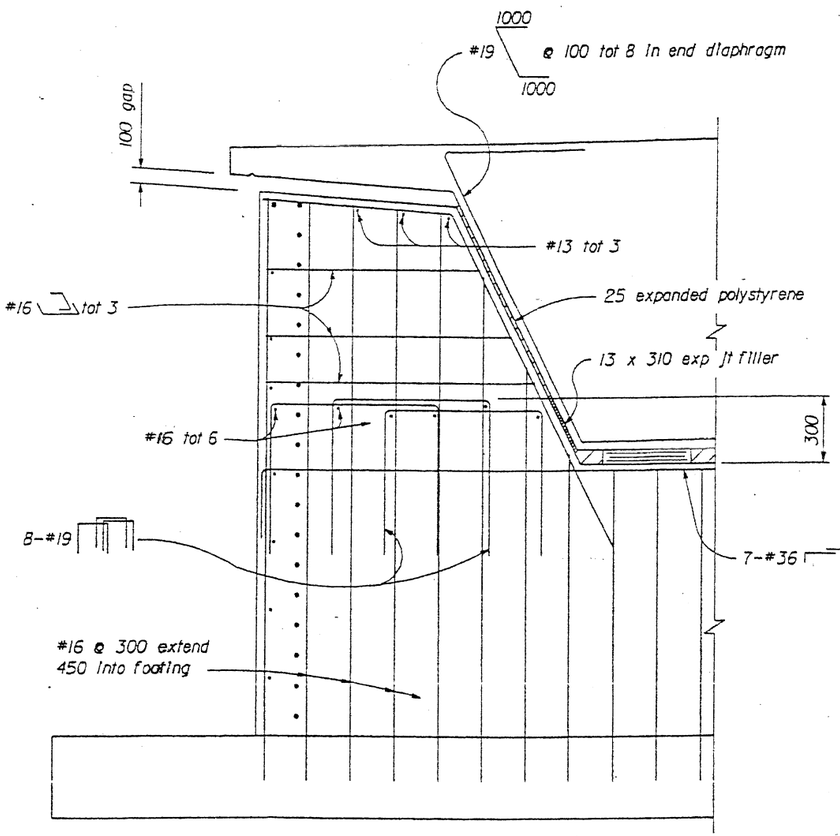

EXTERNAL SHEAR KEY

1:20

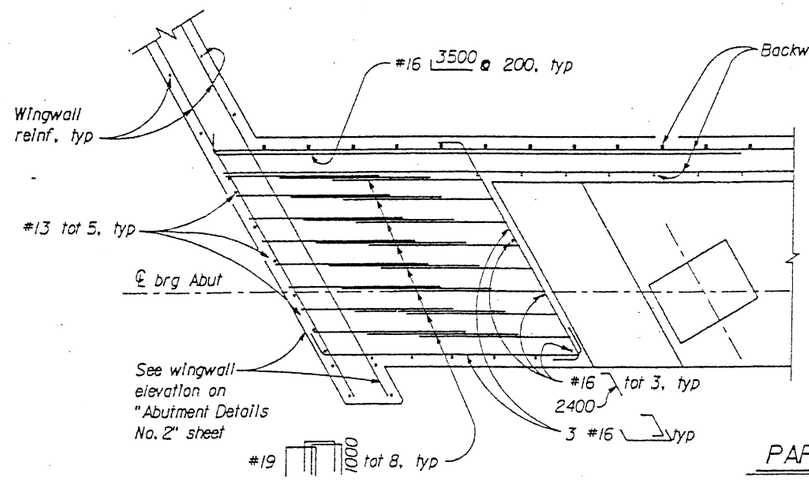

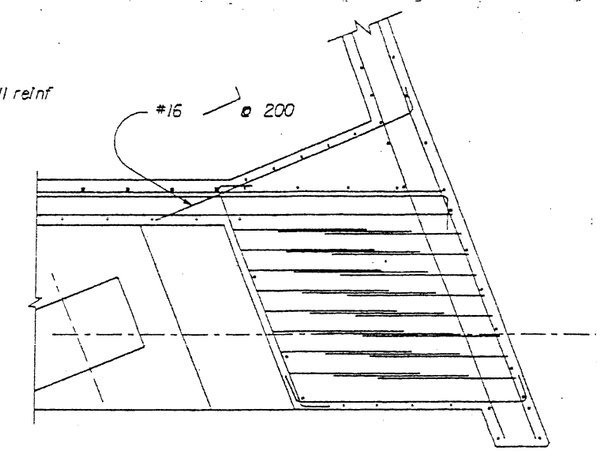

PART SECTION A-A

1:20

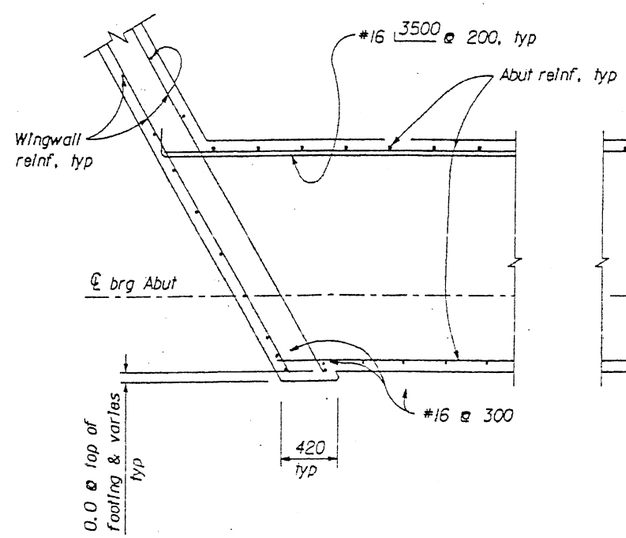

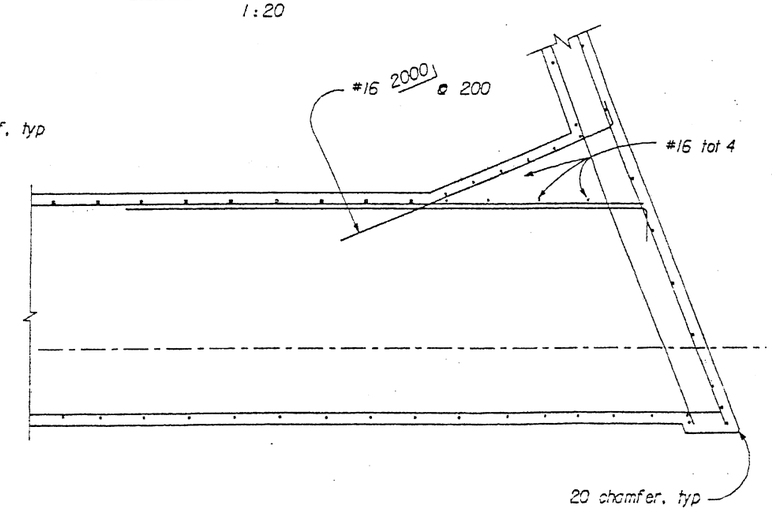

PART SECTION B-B

1:20

DESIGN OVERSIGHT	DESIGN	BY I. B. Engineer	CHECKED B. A. Checker	PREPARED FOR THE STATE OF CALIFORNIA DEPARTMENT OF TRANSPORTATION	TO B. SAMPLE (PROJECT ENGINEER)
SIGNOFF DATE	DETAILS	BY I. B. Engineer	CHECKED B. A. Checker		
	QUANTITIES	BY H. P. Calc	CHECKED B. A. Checker		

BRIDGE NO. 54-624 | KILOMETER POST 46.7

MAIN STREET OVERCROSSING

ABUTMENT DETAILS NO. 1

ORIGINAL SCALE IN MILLIMETERS | CU | DISREGARD PRINTS BEARING | REVISION DATES (PRELIMINARY STAGE ONLY) | SHEET | OF

DIST	COUNTY	ROUTE	KILOMETER POST TOTAL PROJECT	SHEET NO.	TOTAL SHEETS
08	SBd	62			

I. B. Sample
REGISTERED CIVIL ENGINEER

PLANS APPROVAL DATE

PROFESSIONAL ENGINEER REGISTERED TO B. SAMPLE 999999 Exp. 3-31-00 CIVIL STATE OF CALIFORNIA

Fly-by-Night Engineering
123 Third Street
Willow Creek, CA 95567

The State of California or its officers or agents shall not be responsible for the accuracy or completeness of electronic copies of this plan sheet.

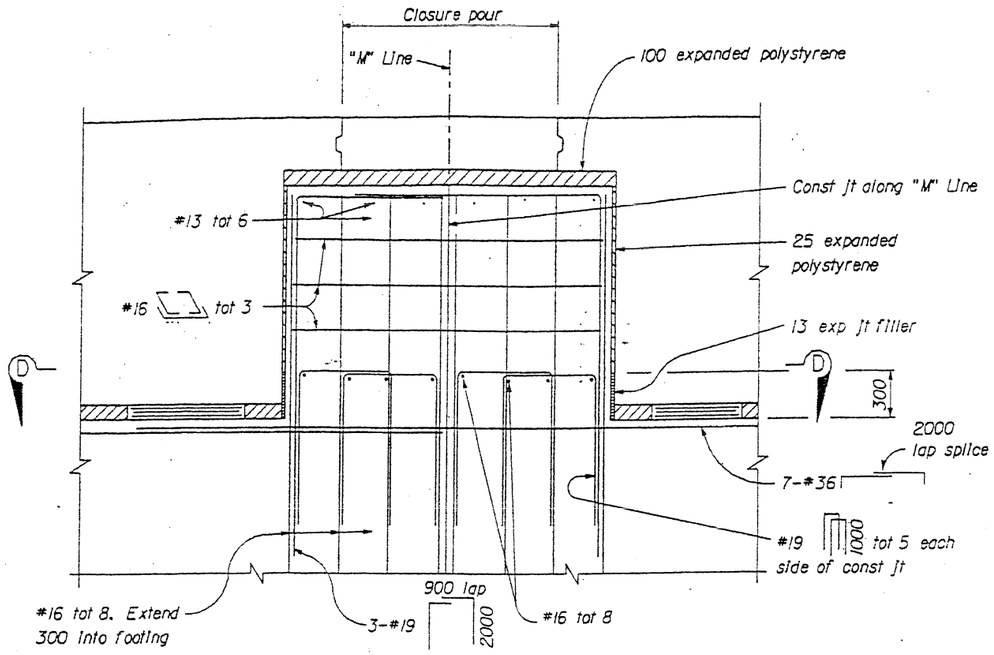

INTERNAL SHEAR KEY
1:20

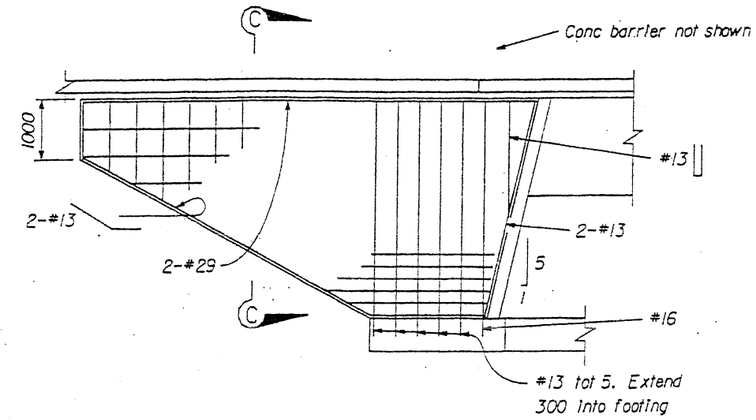

WINGWALL ELEVATION
1:50

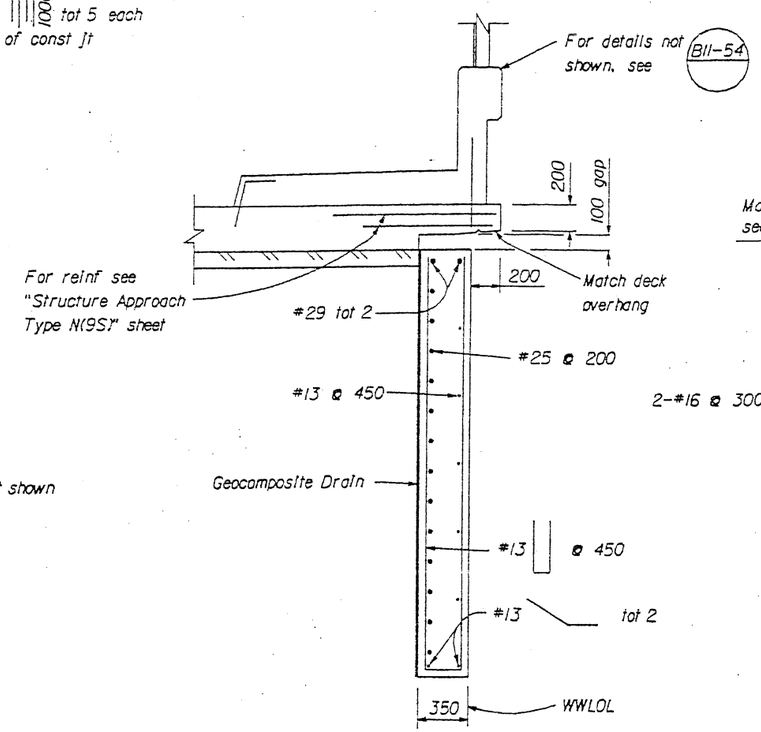

SECTION C-C
1:20

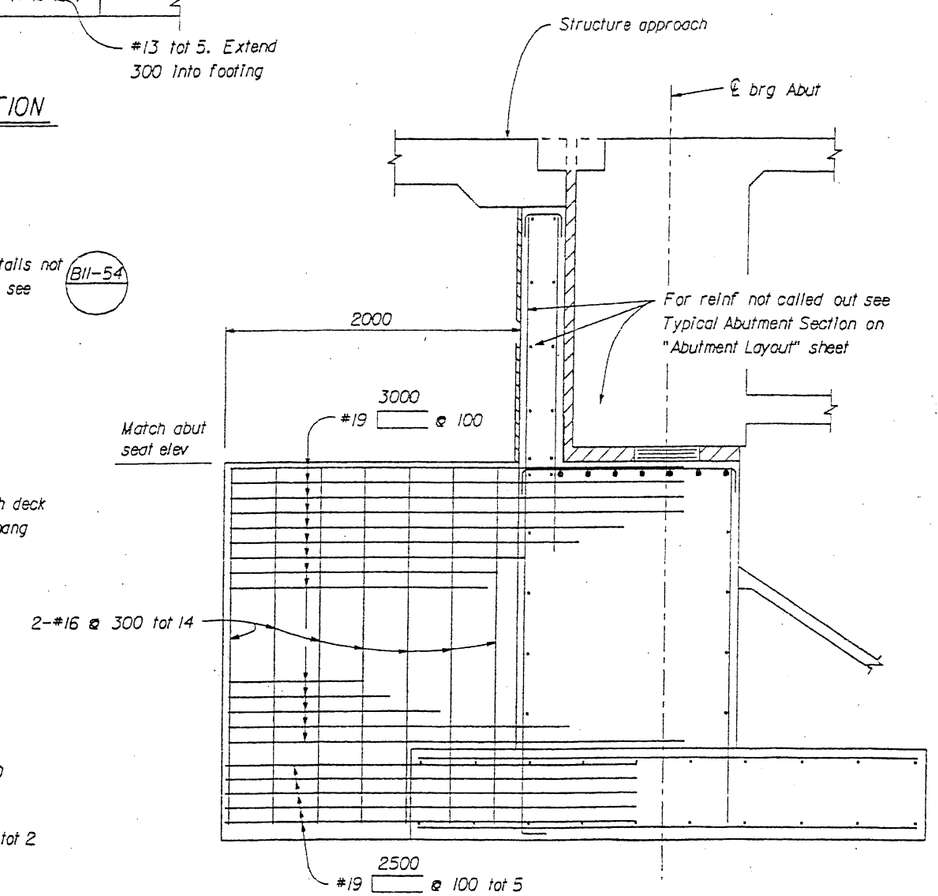

STUB WALL DETAIL
1:20

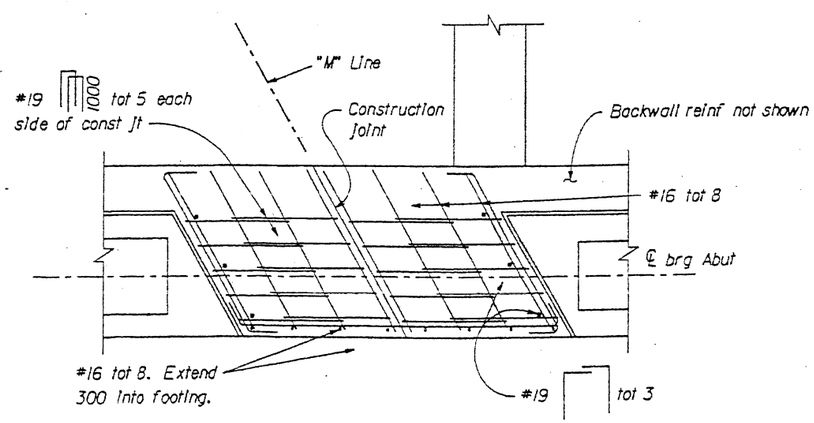

SECTION D-D
1:20

Note:
All dimensions are in millimeters unless otherwise shown

DESIGN OVERSIGHT		DESIGN	BY I. B. Engineer	CHECKED B. A. Checker	PREPARED FOR THE STATE OF CALIFORNIA DEPARTMENT OF TRANSPORTATION
SIGNOFF DATE		DETAILS	BY I. B. Engineer	CHECKED B. A. Checker	
		QUANTITIES	BY H. P. Calc	CHECKED B. A. Checker	

TO B. SAMPLE
PROJECT ENGINEER

BRIDGE NO. 54-624
KILOMETER POST 46.7

MAIN STREET OVERCROSSING
ABUTMENT DETAILS NO. 2

CU
EA

DISREGARD PRINTS BEARING EARLIER REVISION DATES → REVISION DATES (PRELIMINARY STAGE ONLY) 7-24-95 1-9-97 1-27-97 1-8-97 6-20-97 9-2-97

SHEET 6 OF 18

922AAD02.DGN REV.10 TD 8-29-97

ORIGINAL SCALE IN MILLIMETERS FOR REDUCED PLANS 0 10 20 30 40 50 60 70 80 90 100

DIST	COUNTY	ROUTE	KILOMETER POST TOTAL PROJECT	SHEET NO.	TOTAL SHEETS
08	SBd	62			

I. B. Sample
REGISTERED CIVIL ENGINEER

PLANS APPROVAL DATE

PROFESSIONAL ENGINEER — REGISTERED — TO B. SAMPLE — No. 999999 — Exp. 3-31-00 — CIVIL — STATE OF CALIFORNIA

Fly-by-Night Engineering
123 Third Street
Willow Creek, CA 95567

The State of California or its officers or agents shall not be responsible for the accuracy or completeness of electronic copies of this plan sheet.

Note:
All dimensions are in millimeters unless otherwise shown

Caltrans Metric

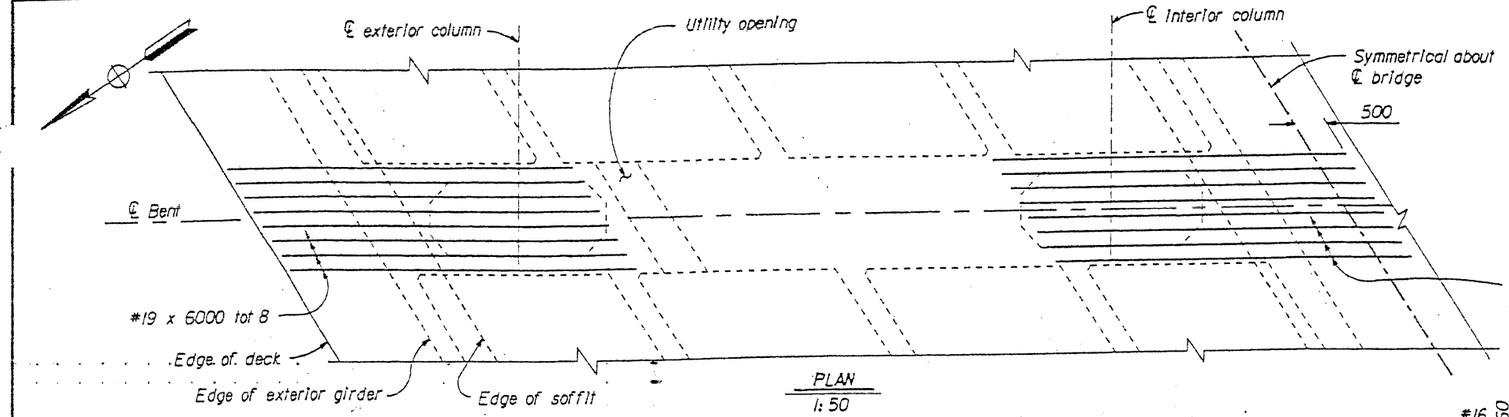

PLAN
1: 50

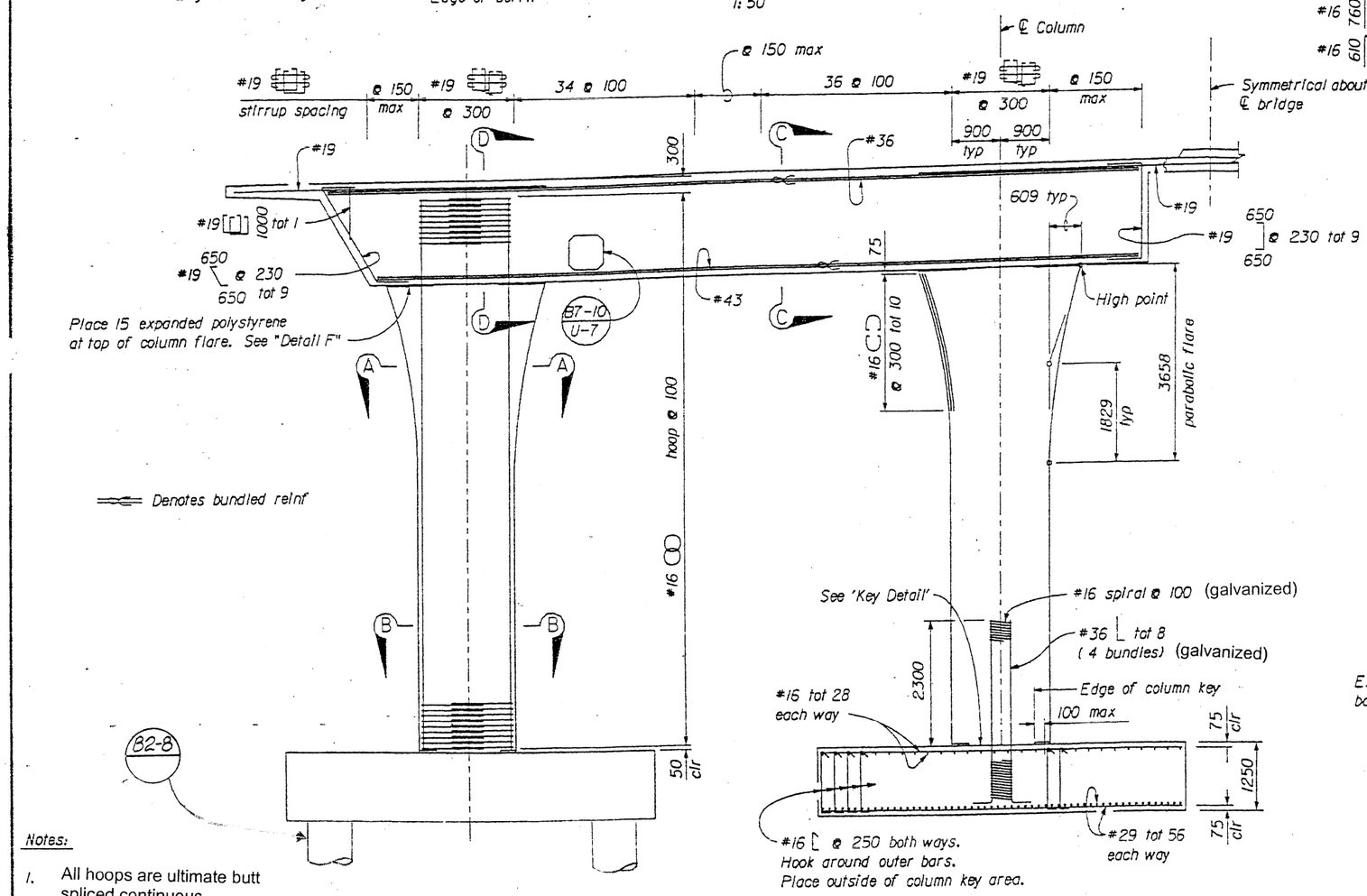

ELEVATION
1: 50

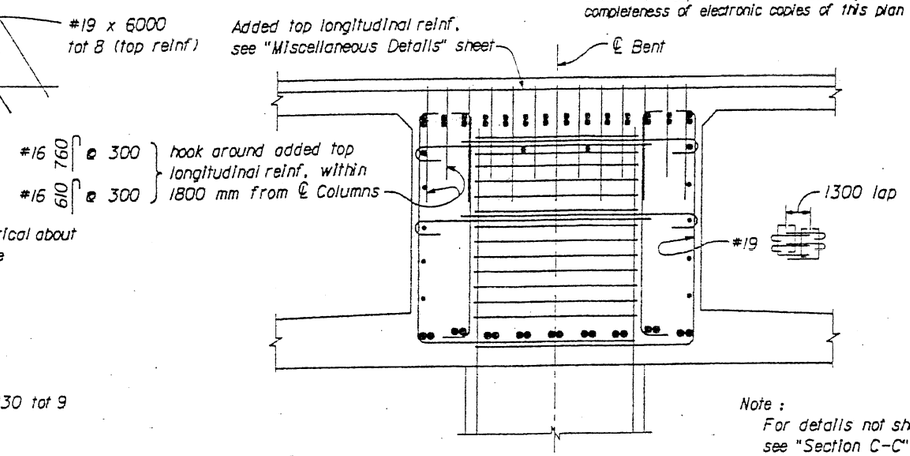

SECTION D-D
1: 20

Note:
For details not shown, see "Section C-C" below.

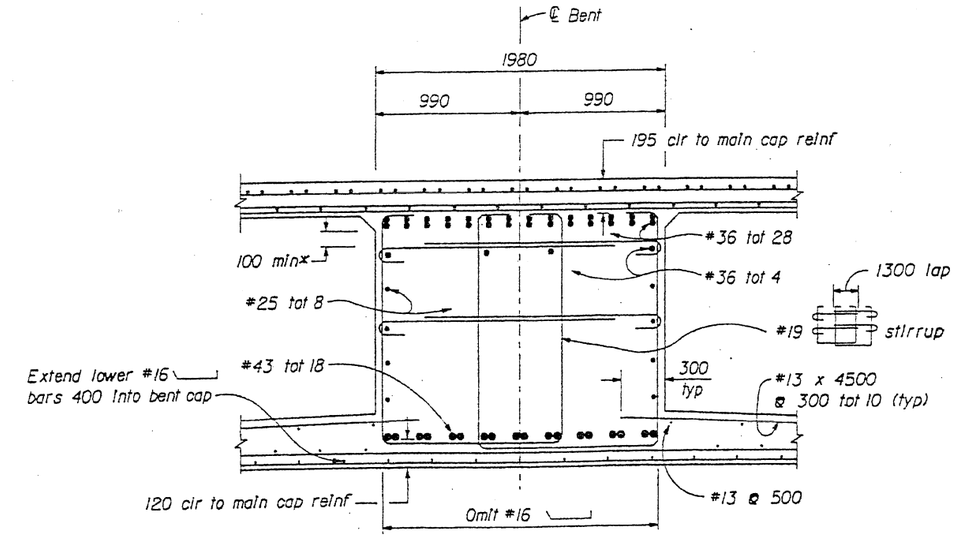

* Adjust reinf to clear prestress ducts

SECTION C-C
1: 20

Notes:

1. All hoops are ultimate butt spliced continuous.
2. No lap splices are allowed in the column vertical reinforcement.
3. Column and footing details are typical for all four columns.
4. For Sections A-A and B-B, Detail F, and Key Detail, see "Bent Details" sheet

DESIGN OVERSIGHT			
SIGNOFF DATE			
DESIGN	BY I. B. Engineer	CHECKED B. A. Checker	
DETAILS	BY I. B. Engineer	CHECKED B. A. Checker	
QUANTITIES	BY H. P. Calc	CHECKED B. A. Checker	

PREPARED FOR THE STATE OF CALIFORNIA DEPARTMENT OF TRANSPORTATION

TO B. SAMPLE
PROJECT ENGINEER

BRIDGE NO. 54-624
KILOMETER POST 46.7

MAIN STREET OVERCROSSING
BENT LAYOUT

REVISION DATES (PRELIMINARY STAGE ONLY) SHEET

DIST	COUNTY	ROUTE	KILOMETER POST TOTAL PROJECT	SHEET NO.	TOTAL SHEETS
08	SBd	62			

T. B. Sample
REGISTERED CIVIL ENGINEER

PLANS APPROVAL DATE

PROFESSIONAL ENGINEER — TO B. SAMPLE — No. 999999 — Exp. 3-31-00 — CIVIL — STATE OF CALIFORNIA

Fly-by-Night Engineering
123 Third Street
Willow Creek, CA 95567

The State of California or its officers or agents shall not be responsible for the accuracy or completeness of electronic copies of this plan sheet.

Caltrans Metric

Note:
All dimensions are in millimeters unless otherwise shown

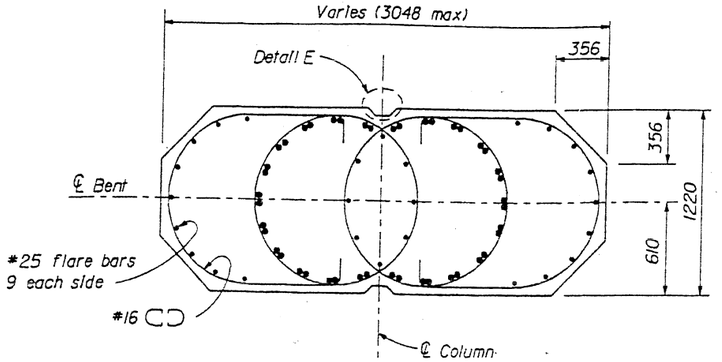

SECTION A-A
1:20

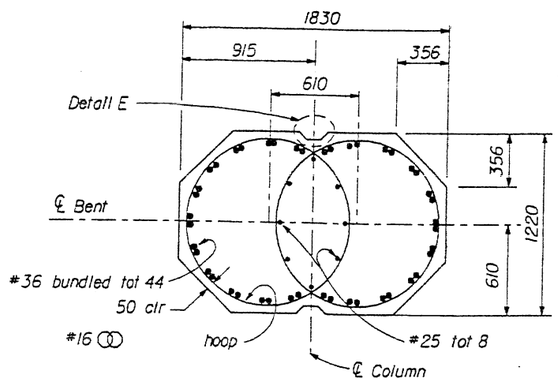

SECTION B-B
1:20

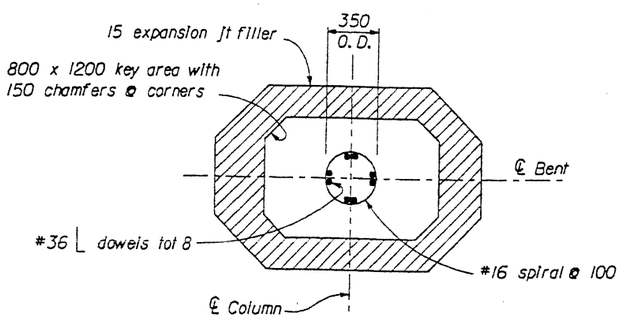

KEY DETAIL
1:20

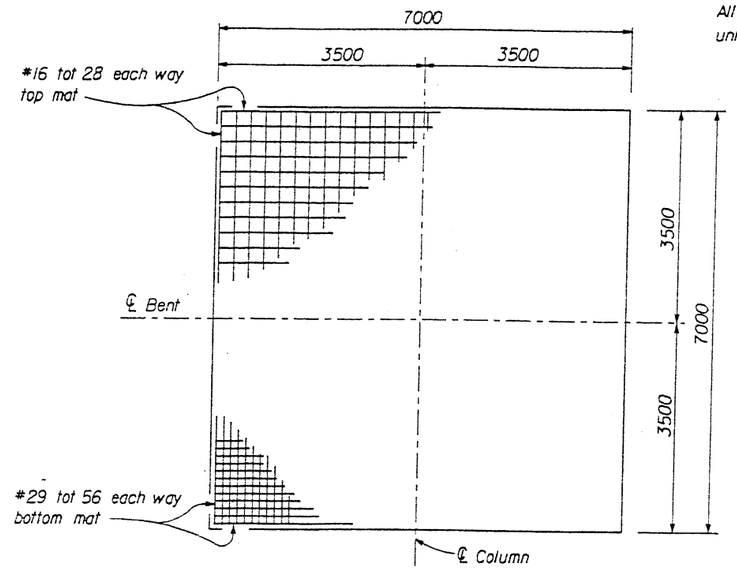

FOOTING PLAN
1:50

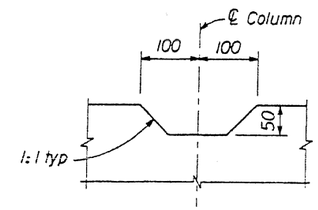

DETAIL E
No Scale

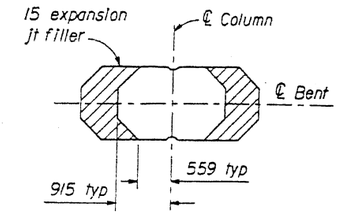

DETAIL F
1:50

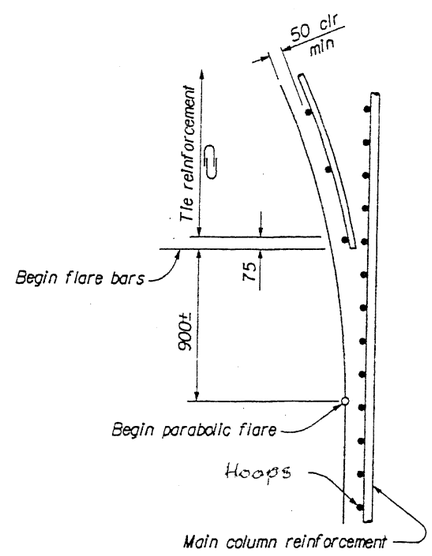

HOOPS AND TIE DETAIL
No Scale

DESIGN OVERSIGHT		DESIGN	BY I. B. Engineer	CHECKED B. A. Checker	PREPARED FOR THE STATE OF CALIFORNIA DEPARTMENT OF TRANSPORTATION
SIGNOFF DATE		DETAILS	BY I. B. Engineer	CHECKED B. A. Checker	
		QUANTITIES	BY H. P. Calc	CHECKED B. A. Checker	

TO B. SAMPLE
PROJECT ENGINEER

BRIDGE NO. 54-624
KILOMETER POST 46.7

MAIN STREET OVERCROSSING
BENT DETAILS

922ABL02.DGN REV. 10 TD 8/29/97

ORIGINAL SCALE IN MILLIMETERS FOR REDUCED PLANS 0 10 20 30 40 50 60 70 80 90 100

CU
CA

DISREGARD PRINTS BEARING EARLIER REVISION DATES

REVISION DATES (PRELIMINARY STAGE ONLY) 7-24-95 1-5-97 1-22-97 4-1-97 6-20-97 9-2-97

SHEET 8 OF 18

DIST	COUNTY	ROUTE	KILOMETER POST TOTAL PROJECT	SHEET NO.	TOTAL SHEETS
08	SBd	62			

T. B. Sample
REGISTERED CIVIL ENGINEER

PROFESSIONAL ENGINEER — TO B. SAMPLE — No. 999999 — Exp. 3-31-00 — CIVIL — STATE OF CALIFORNIA

PLANS APPROVAL DATE

Fly-by-Night Engineering
123 Third Street
Willow Creek, CA 95567

The State of California or its officers or agents shall not be responsible for the accuracy or completeness of electronic copies of this plan sheet.

Caltrans Metric

Note:
All dimensions are in millimeters unless otherwise shown

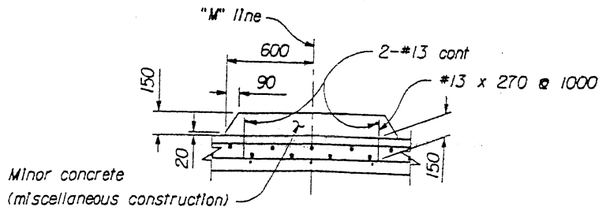

RAISED MEDIAN DETAIL
1: 20

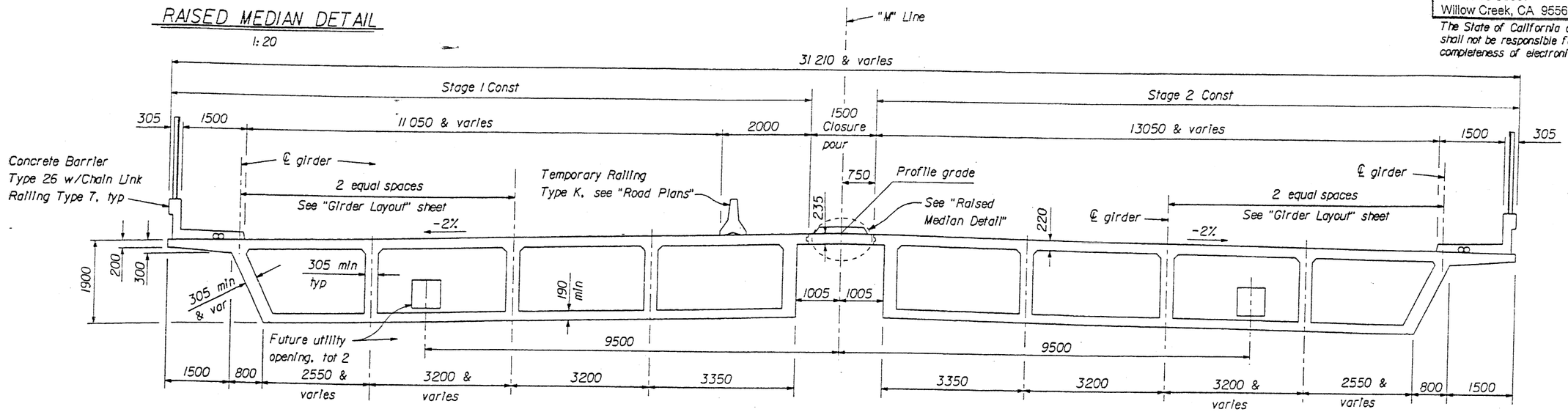

TYPICAL SECTION
1: 50

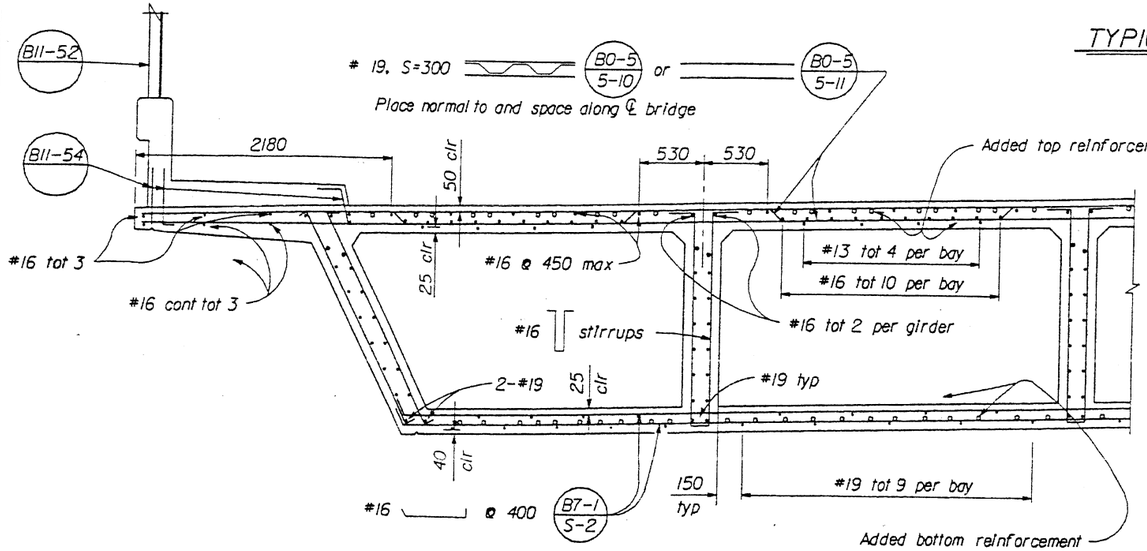

PART TYPICAL SECTION
1: 25

B0-5 B7-1 B8-5

For added top and bottom reinf, see "Miscellaneous Details" sheet

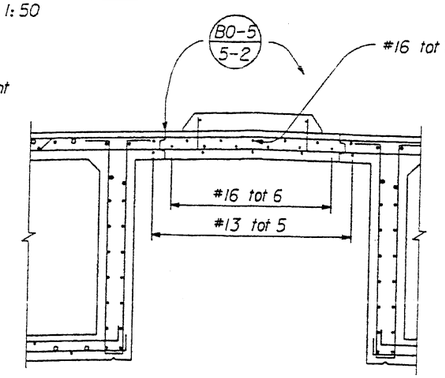

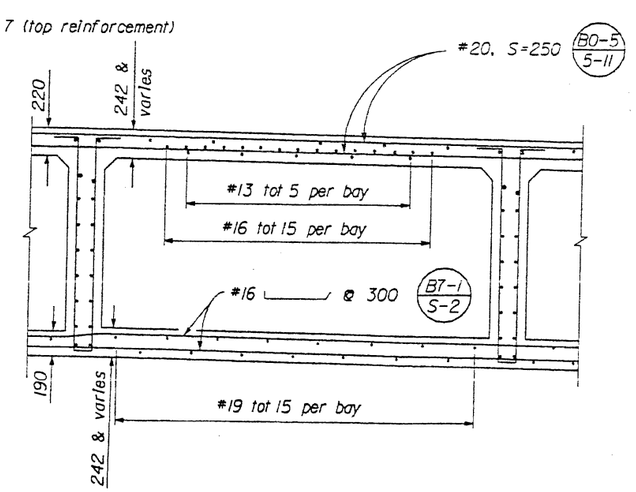

PART TYPICAL SECTION
Variable Width Bays
1: 25

Note:
For details not shown, see Part Typical Section

DESIGN OVERSIGHT		DESIGN	BY I. B. Engineer	CHECKED B. A. Checker	
SIGNOFF DATE		DETAILS	BY I. B. Engineer	CHECKED B. A. Checker	
		QUANTITIES	BY H. P. Calc	CHECKED B. A. Checker	

PREPARED FOR THE STATE OF CALIFORNIA DEPARTMENT OF TRANSPORTATION

TO B. SAMPLE
PROJECT ENGINEER

BRIDGE NO. ~~54-624~~
KILOMETER POST 46.7

MAIN STREET OVERCROSSING
TYPICAL SECTION

922ATS01.DGN REV.13 TD 9-2-97

ORIGINAL SCALE IN MILLIMETERS FOR REDUCED PLANS 0 10 20 30 40 50 60 70 80 90 100

CU
EA

DISREGARD PRINTS BEARING EARLIER REVISION DATES → 7-24-95 | 1-9-98 | 1-22-98 | 4-8-98 | 6-20-98 | 9-2-98

REVISION DATES (PRELIMINARY STAGE ONLY)

SHEET 9 OF 18

DIST	COUNTY	ROUTE	KILOMETER POST TOTAL PROJECT	SHEET NO.	TOTAL SHEETS
08	SBd	62			

I. B. Sample
REGISTERED CIVIL ENGINEER

PROFESSIONAL ENGINEER REGISTERED TO B. SAMPLE No. 999999 Exp. 3-31-00 CIVIL STATE OF CALIFORNIA

PLANS APPROVAL DATE

Fly-by-Night Engineering
123 Third Street
Willow Creek, CA 95567

The State of California or its officers or agents shall not be responsible for the accuracy or completeness of electronic copies of this plan sheet.

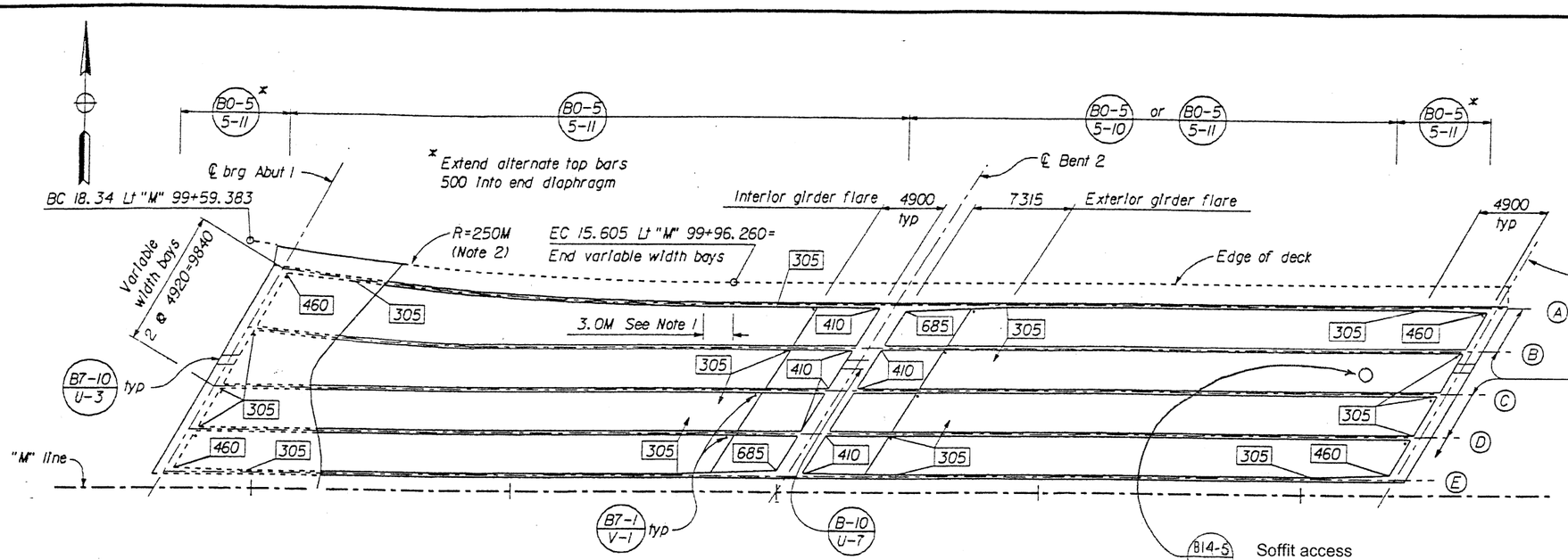

GIRDER LAYOUT

1: 200

PRESTRESSING NOTES

270 KSI low Relaxation Strand:

Left structure (Stage 1)

Pjack = 50.800 kN
Anchor Set = 10mm
Total No of girders = 5

Distribution of prestress force (Pjack) between girders shall not exceed the ratio of 3: 2. Maximum final force variation between girders shall not exceed 3200 kN.

Concrete: f'c = 28 MPa @ 28 days
f'ci = 24 MPa @ time of stressing

Contractor shall submit elongation calculations based on initial stress at:
☒ = .88 times jacking stress.

One end stressing shall be performed from the long-span end only.

Notes:

1. Vary top slab thickness from 220 to 242 and bottom slab thickness from 190 to 242. See "Typical Section" sheet.
2. Edge of deck curve data: R = 250M
   Δ = 8° 28' 57"
   T = 18.540M
   L = 37.012M

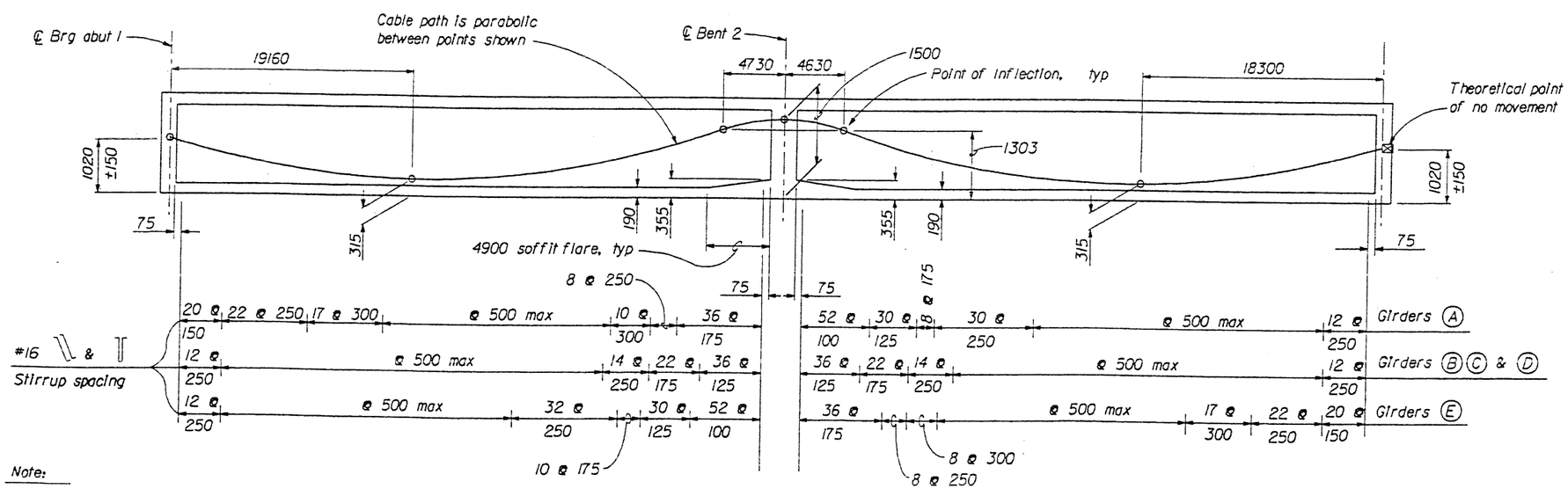

Note:

All dimensions are in millimeters unless otherwise shown

LONGITUDINAL SECTION

No Scale

B7-1 B8-5

DESIGN OVERSIGHT			
SIGNOFF DATE			
DESIGN	BY I. B. Engineer	CHECKED B. A. Checker	
DETAILS	BY I. B. Engineer	CHECKED B. A. Checker	
QUANTITIES	BY H. P. Calc	CHECKED B. A. Checker	

PREPARED FOR THE STATE OF CALIFORNIA DEPARTMENT OF TRANSPORTATION

TO B. SAMPLE
PROJECT ENGINEER

BRIDGE NO. 54-624
KILOMETER POST 46.7

MAIN STREET OVERCROSSING
GIRDER LAYOUT NO. 1

922AGL01.DGN REV12 TD 9/3/97

ORIGINAL SCALE IN MILLIMETERS FOR REDUCED PLANS 0 10 20 30 40 50 60 70 80 90 100

CU
EA

DISREGARD PRINTS BEARING EARLIER REVISION DATES

REVISION DATES (PRELIMINARY STAGE ONLY) 7-24-95 1-9-97 1-22-97 4-8-97 6-20-97 9-2-97

SHEET 10 OF 18

DIST	COUNTY	ROUTE	KILOMETER POST TOTAL PROJECT	SHEET NO.	TOTAL SHEETS
08	SBd	62			

T. B. Sample
REGISTERED CIVIL ENGINEER

PLANS APPROVAL DATE

REGISTERED PROFESSIONAL ENGINEER TO B. SAMPLE No. 999999 Exp. 3-31-00 CIVIL STATE OF CALIFORNIA

Fly-by-Night Engineering
123 Third Street
Willow Creek, CA 95567

The State of California or its officers or agents shall not be responsible for the accuracy or completeness of electronic copies of this plan sheet.

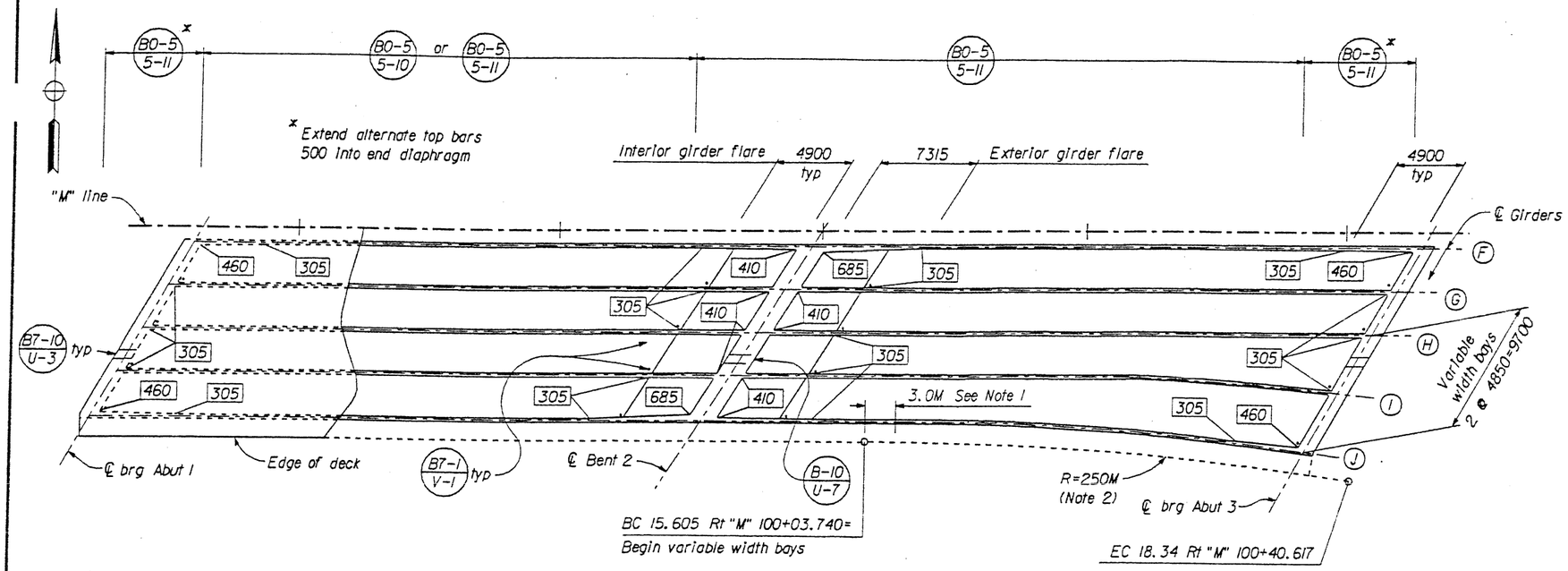

GIRDER LAYOUT

1: 200

Notes:

1. Vary top slab thickness from 220 to 242 and bottom slab thickness from 190 to 242. See "Typical Section" sheet.
2. Edge of deck curve data: R = 250M
   Δ = 8° 28' 57"
   T = 18.540M
   L = 37.012M

PRESTRESSING NOTES

270 KSI low Relaxation Strand:

Right structure (Stage 2)

Pjack = 49,800 kN
Anchor Set = 10mm
Total No of girders = 5

Distribution of prestress force (Pjack) between girders shall not exceed the ratio of 3:2. Maximum final force variation between girders shall not exceed 3200 kN.

Concrete: f'c = 28 MPa @ 28 days
f'ci = 24 MPa @ time of stressing

Contractor shall submit elongation calculations based on initial stress at:
☒ = .88 times jacking stress.

One end stressing shall be performed from the long-span end only.

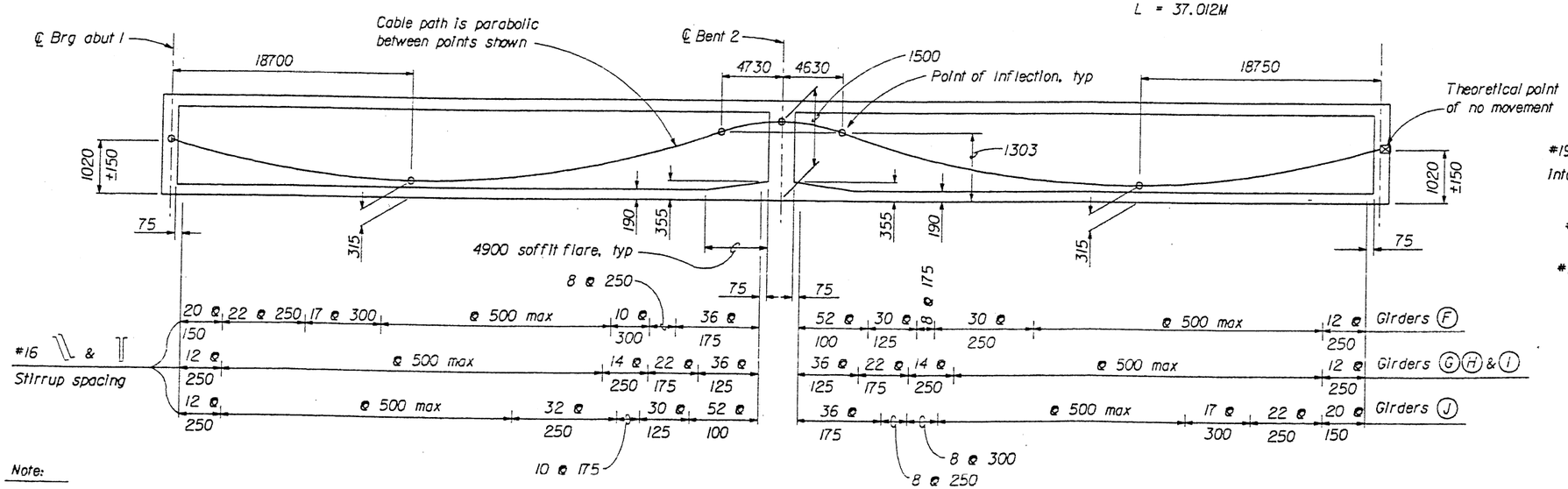

Note:

All dimensions are in millimeters unless otherwise shown

LONGITUDINAL SECTION

No Scale

B7-1 B8-5

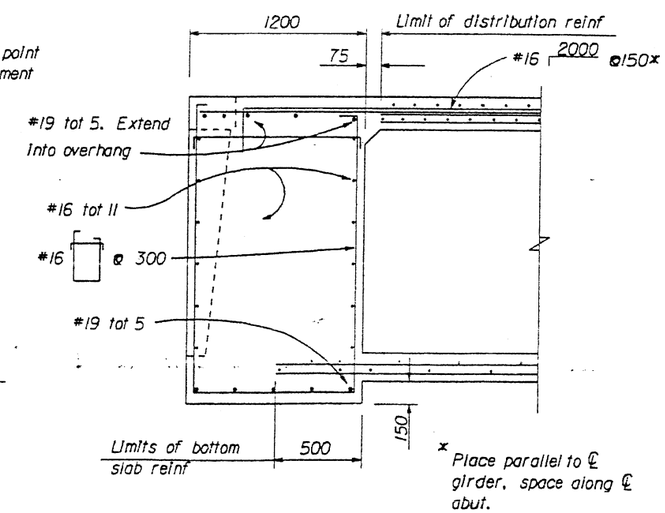

END DIAPHRAGM

1: 20

B8-5

DESIGN OVERSIGHT		DESIGN	BY I. B. Engineer	CHECKED B. A. Checker	PREPARED FOR THE STATE OF CALIFORNIA DEPARTMENT OF TRANSPORTATION
SIGNOFF DATE		DETAILS	BY I. B. Engineer	CHECKED B. A. Checker	
		QUANTITIES	BY H. P. Calc	CHECKED B. A. Checker	

TO B. SAMPLE
PROJECT ENGINEER

BRIDGE NO. 54-524
KILOMETER POST 46.7

MAIN STREET OVERCROSSING
GIRDER LAYOUT NO. 2

922AGL02.DGN REV.04 TD 9/3/97

ORIGINAL SCALE IN MILLIMETERS FOR REDUCED PLANS 0 10 20 30 40 50 60 70 80 90 100

CU
EA

DISREGARD PRINTS BEARING EARLIER REVISION DATES

REVISION DATES (PRELIMINARY STAGE ONLY) 1-24-95 1-9-97 1-22-97 4-8-97 6-20-97 9-2-97

SHEET 11 OF 18

DIST	COUNTY	ROUTE	KILOMETER POST TOTAL PROJECT	SHEET NO.	TOTAL SHEETS
08	SBd	62			

I. B. Sample
REGISTERED CIVIL ENGINEER

PLANS APPROVAL DATE

REGISTERED PROFESSIONAL ENGINEER TO B. SAMPLE No. 999999 Exp. 3-31-00 CIVIL STATE OF CALIFORNIA

Fly-by-Night Engineering
123 Third Street
Willow Creek, CA 95567

Caltrans Metric

The State of California or its officers or agents shall not be responsible for the accuracy or completeness of electronic copies of this plan sheet.

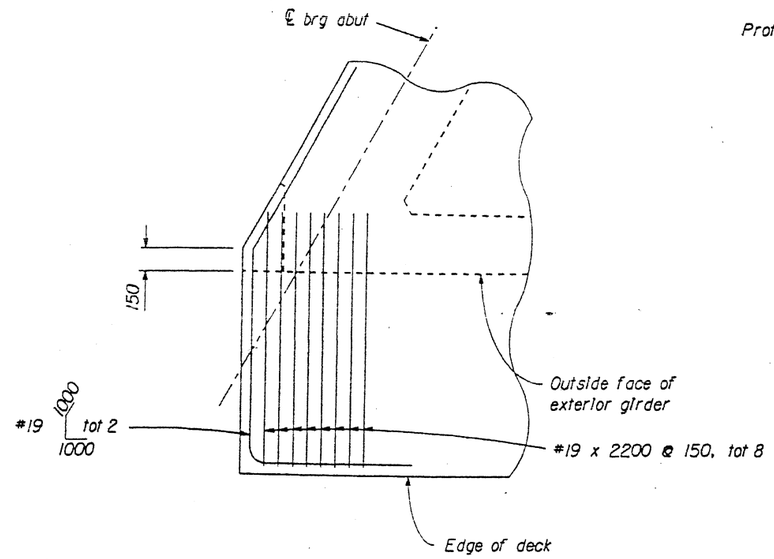

*@ P/S anchorage for girders (A), (E), (F) & (J)

PARTIAL PLAN EXTERIOR GIRDER P/S ANCHORAGE

No Scale

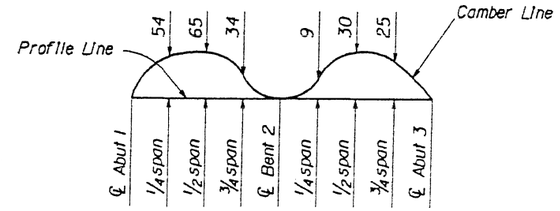

LEFT BRIDGE

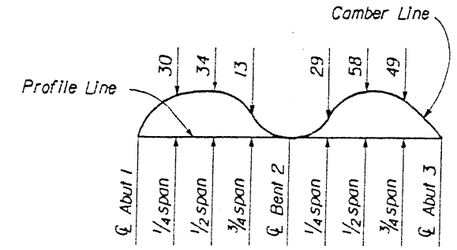

RIGHT BRIDGE

CAMBER DIAGRAM

No Scale

Does not include allowance for falsework settlement

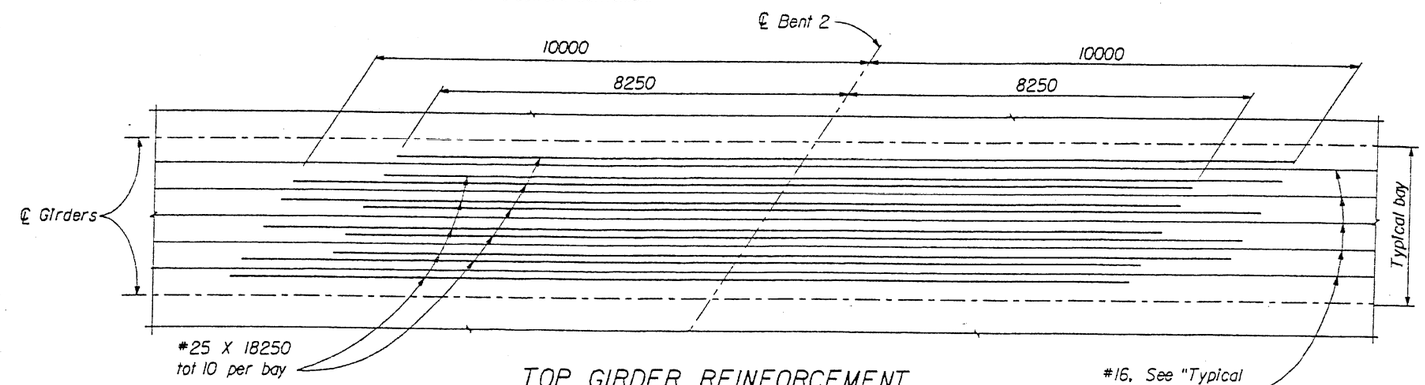

TOP GIRDER REINFORCEMENT

No Scale

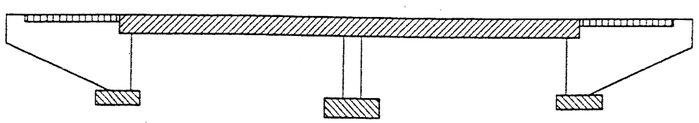

Structural Concrete, Bridge

Structural Concrete, Approach Slab

Structural Concrete, Bridge Footing

Structural Concrete, Bridge (See prestressing notes)

CONCRETE STRENGTH AND TYPE LIMITS

No Scale

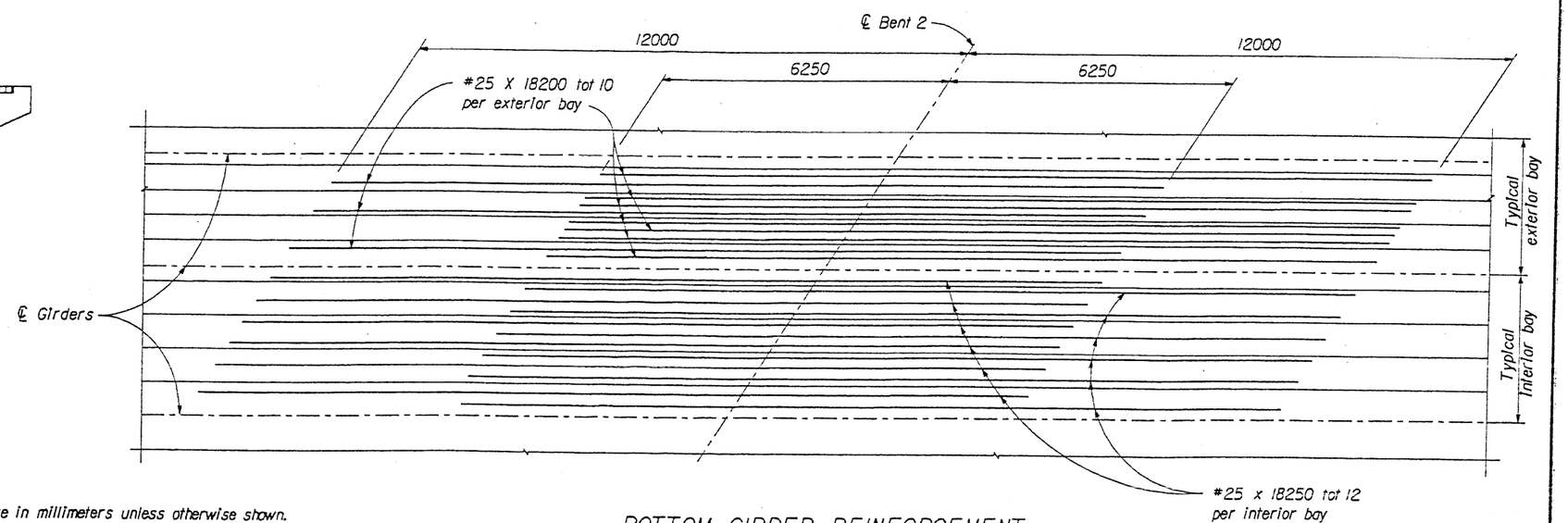

BOTTOM GIRDER REINFORCEMENT

No Scale

Notes :

1. All dimensions are in millimeters unless otherwise shown.
2. No splices allowed for added top and bottom girder reinforcement.

DESIGN	BY I. B. Engineer	CHECKED B. A. Checker	
DETAILS	BY I. B. Engineer	CHECKED B. A. Checker	
QUANTITIES	BY H. P. Calc	CHECKED B. A. Checker	

DESIGN OVERSIGHT

SIGNOFF DATE

PREPARED FOR THE STATE OF CALIFORNIA DEPARTMENT OF TRANSPORTATION

TO B. SAMPLE
PROJECT ENGINEER

BRIDGE NO. 54-624

KILOMETER POST 46.7

MAIN STREET OVERCROSSING
MISCELLANEOUS DETAILS

922AMD05.DGN REV.9 CH 9-2-97

ORIGINAL SCALE IN MILLIMETERS FOR REDUCED PLANS 0 10 20 30 40 50 60 70 80 90 100

CU
EA

DISREGARD PRINTS BEARING EARLIER REVISION DATES =

REVISION DATES (PRELIMINARY STAGE ONLY) 7-24-95 1-3-97 1-22-97 4-1-97 6-20-97 9-2-97

SHEET 12 OF 18

RELEASED 4-21-94

DIST.	COUNTY	ROUTE	KILOMETER POST TOTAL PROJECT	SHEET NO.	TOTAL SHEETS
08	SBd	62			

T. B. Sample
REGISTERED CIVIL ENGINEER

REGISTERED PROFESSIONAL ENGINEER TO B. SAMPLE No. 999999 Exp. 3-31-00 CIVIL STATE OF CALIFORNIA

PLANS APPROVAL DATE

Caltrans Metric

The State of California or its officers or agents shall not be responsible for the accuracy or completeness of electronic copies of this plan sheet.

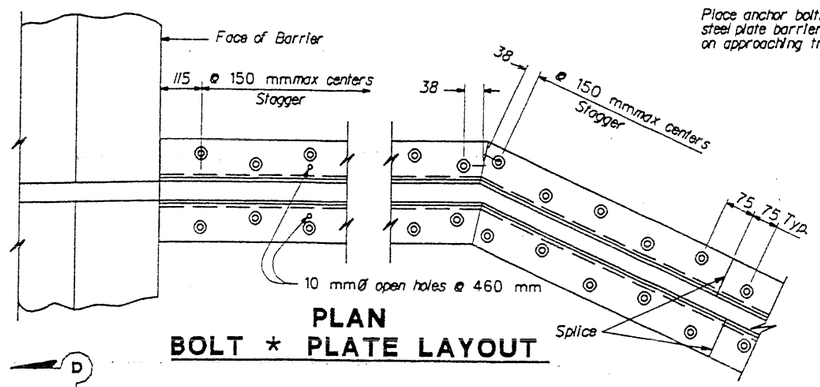

PLAN
BOLT * PLATE LAYOUT

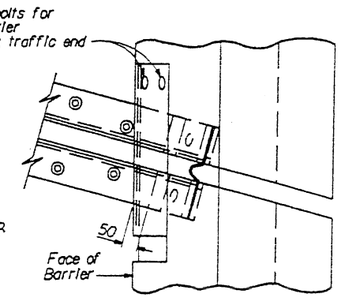

SKEW * 20°

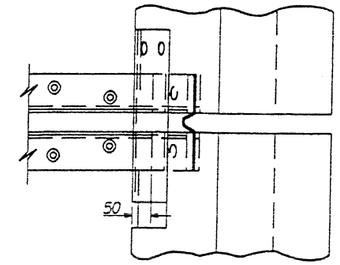

SKEW * 20°

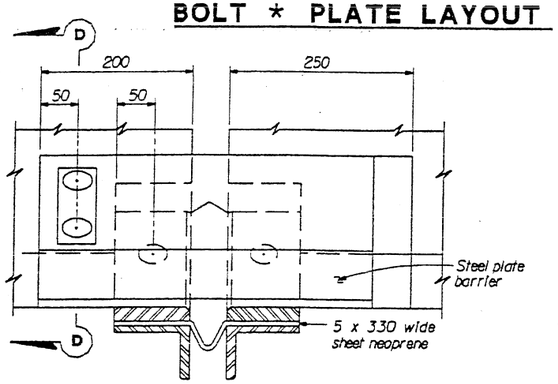

VIEW B-B

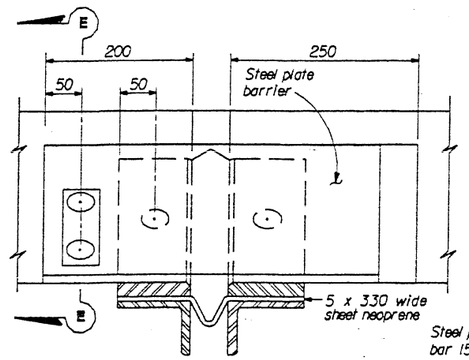

VIEW C-C

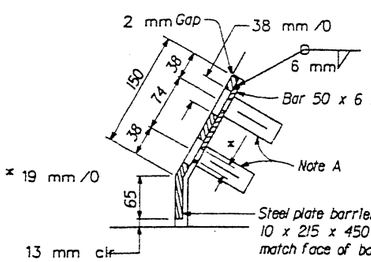

SECTION D-D

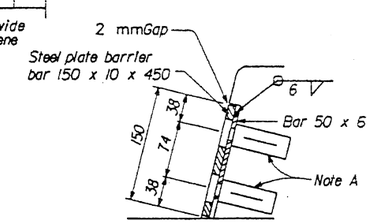

SECTION E-E

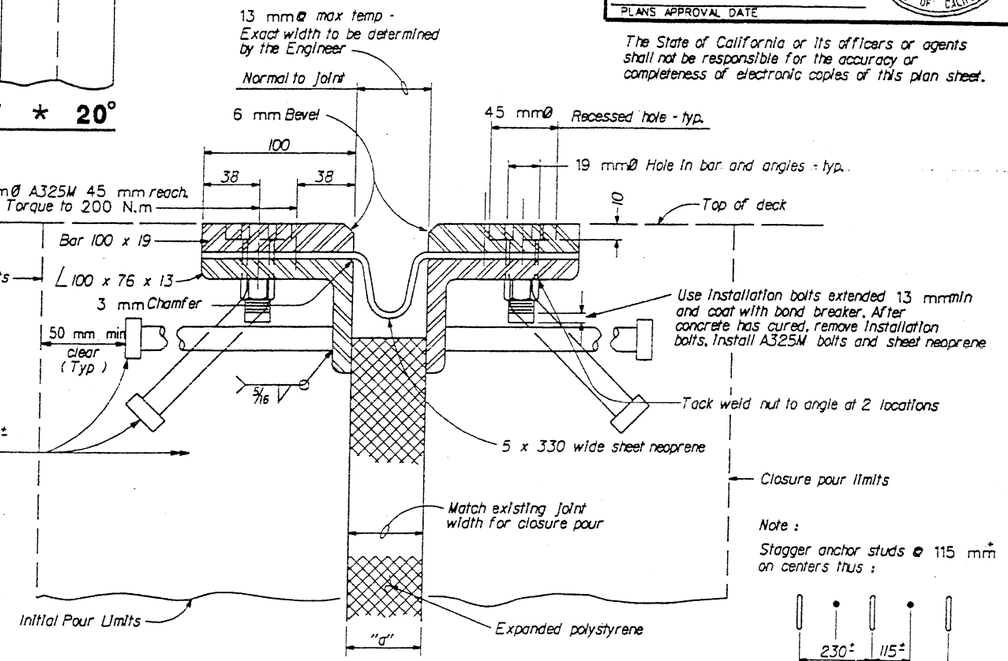

SECTION A-A

Joint Information			"d" Dimensions		
Location	Movement Rating (MR)	Skew	Winter	Spring & Fall	Summer
Abut 1 & 3	60	30°	36	27	18

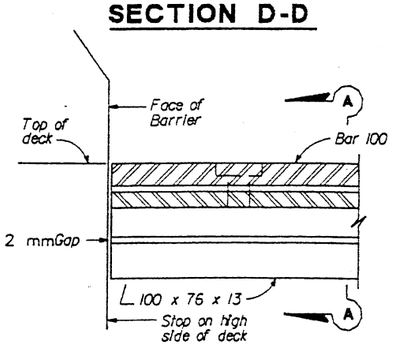

HIGH SIDE BARRIER DETAIL

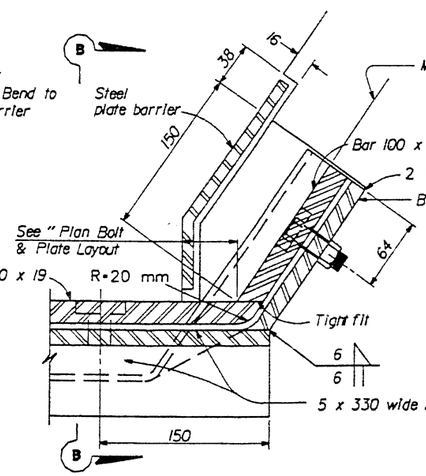

LOW SIDE BARRIER DETAIL
(See Note B)

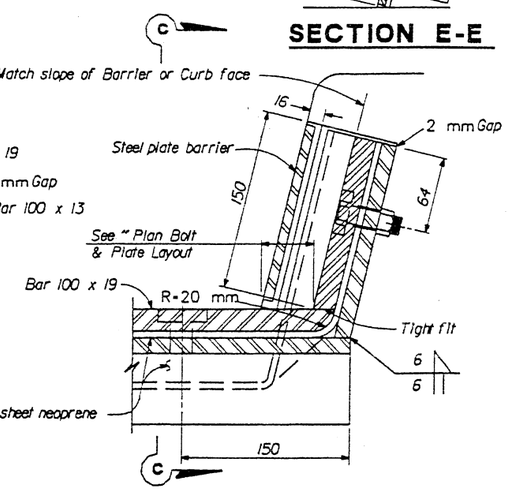

SIDEWALK DETAIL
(See Note B)

NOTES:

Full penetration butt welds may be substituted for fillet welds on all anchor studs.

Alternate types of anchor studs may be permitted subject to the approval by the Engineer.

Joint seal assembly to be used in conjunction with closure pour. (See other sheets for limits). Closure pour shall not be placed until final deck surface is within the tolerance specified.

Use joint at crown of roadway, at any change in transverse slope in deck and at changes in horizontal direction. Place other joints at or near lanes. All metal parts to be painted or galvanized after fabrication.

Sheet neoprene shall be fabricated in one continuous piece or joints shall be vulcanized. Neoprene shall be fabricated to bend around corners. 25 mmholes in neoprene sheets shall be drilled or punched so that the neoprene is not distorted at the time of installation.

NOTE A

Insert assembly or expansion anchorage for 16 x 45 A325M bolt.

NOTE B

Use the Sidewalk Detail at all sidewalk joints. Use the Barrier Detail at both sides if the roadway is crowned or if the difference in elevation between the ends of the seal is 150 mm or less.

NO SCALE

ALL DIMENSIONS ARE IN MILLIMETERS UNLESS OTHERWISE SHOWN

STANDARD DRAWING				
FILE NO. X8 12-59	DESIGN	BY H. HERR	CHECKED R. LACALLE	APPROVAL RECOMMENDED BY
DESIGN DATE 9/93	DETAILS	BY R. YEE	CHECKED R. LACALLE	DESIGN SUPERVISOR
	SUBMITTED BY C.W. PURKISS			

STATE OF CALIFORNIA
DEPARTMENT OF TRANSPORTATION

DIVISION OF STRUCTURES
STRUCTURE DESIGN

BRIDGE NO. 54-624
KILOMETER POST 46.7

MAIN STREET OVERCROSSING
JOINT SEAL ASSEMBLY
(MAXIMUM MOVEMENT RATING = 100 mm)

922AMD06.DGN REV.04 KD 06/17/97

ORIGINAL SCALE IN MILLIMETERS FOR REDUCED PLANS 0 10 20 30 40 50 60 70 80 90 100

CU
EA

DISREGARD PRINTS BEARING EARLIER REVISION DATES → 7-21-95 10-97 1-22-97 4-11-97 6-20-97

REVISION DATES (PRELIMINARY STAGE ONLY)

SHEET 13 OF 18

RELEASED 11-2-92

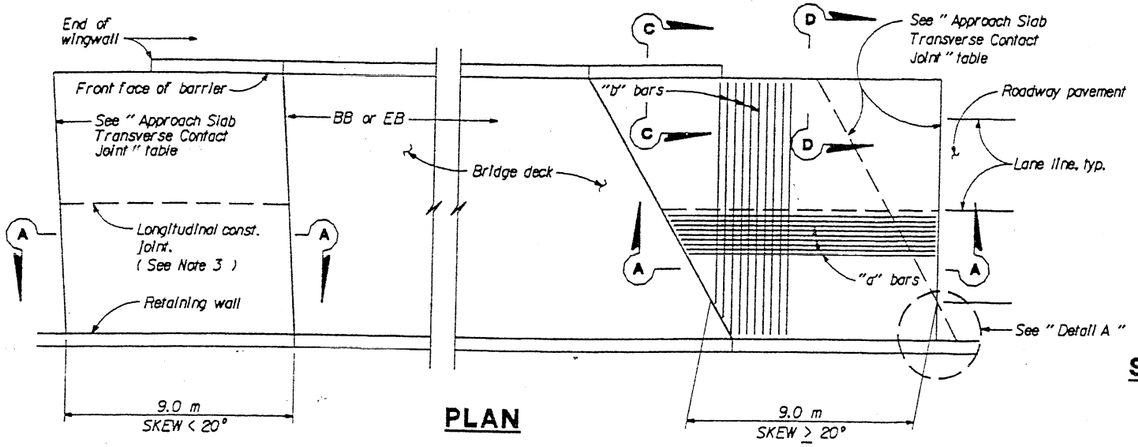

PLAN

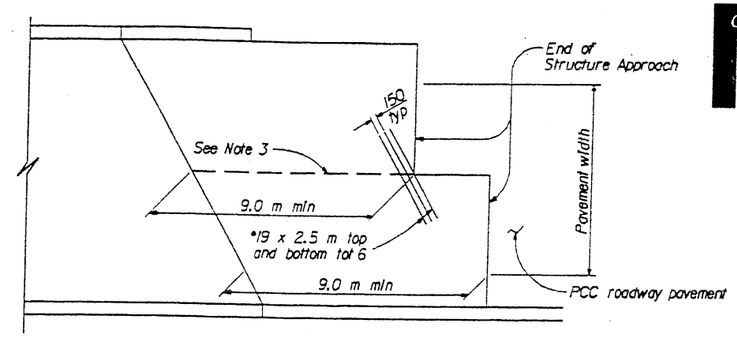

STRUCTURE APPROACH - END STAGGER DETAIL

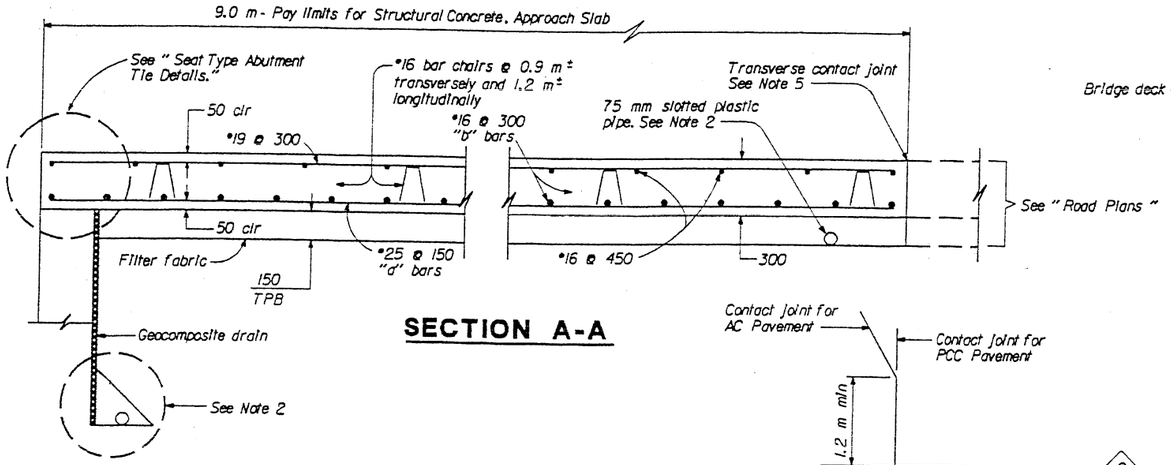

SECTION A-A

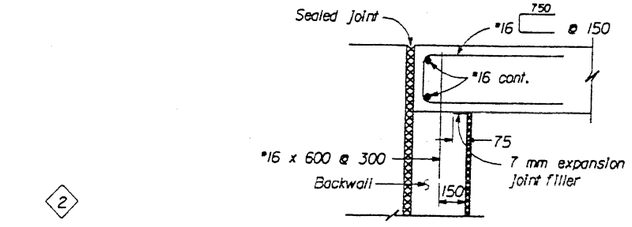

DETAIL A

2

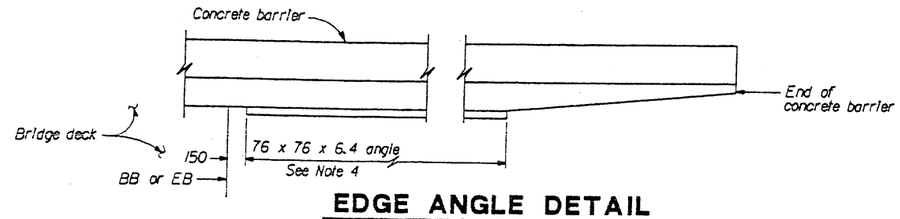

EDGE ANGLE DETAIL

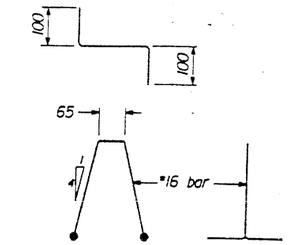

BAR CHAIR DETAIL

MR ≤ 50 MM

APPROACH SLAB TRANSVERSE CONTACT JOINT		
APPROACH SKEW	WITH AC ROADWAY PAVEMENT	WITH PCC ROADWAY PAVEMENT
< 20°	Parallel to face of paving notch	Parallel to face of paving notch
20° - 45°	Parallel to face of P N use (Detail A)	Stagger lines 7.2 m to 10.8 m apart.
> 45°	Parallel to face of P N use (Detail A)	Stagger at each lane line.

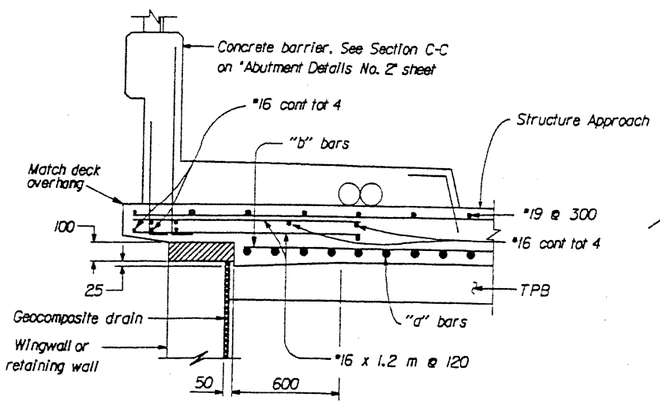

SECTION C-C

1

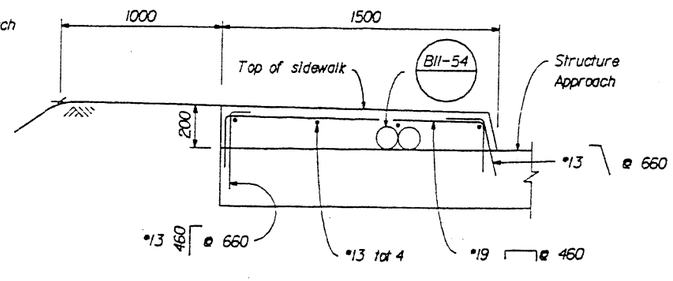

SECTION D-D

3

2

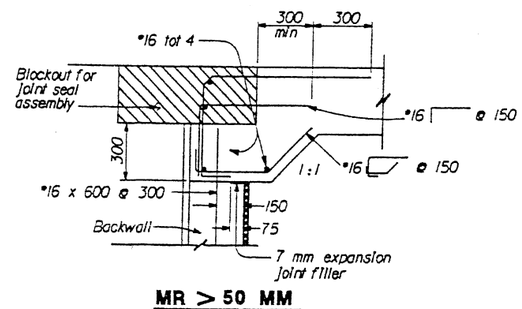

MR > 50 MM

SEAT TYPE ABUTMENT TIE DETAILS (SEE NOTE 1)

NOTES:

1. For details not shown, see Structure Plans. For MR ≤ 50 mm, adjust bar reinforcement to clear a sawcut for sealed joint, when required.
2. For drainage details, see " Structure Approach Drainage Details " sheet.
3. Longitudinal construction joints, when permitted by the Engineer, shall be located on lane lines.
4. End angle at beginning of barrier transition, end of wingwall or end of structure approach, as applicable.
5. For transverse contact joint with new PCC paving, refer to Standard Plan A35-A.
6. At the contractor's option, approach slab transverse reinforcement may be placed parallel to paving notch. Spacing of transverse reinforcement is measured along ℄ roadway.

Remove all polystyrene.

NO SCALE

ALL DIMENSIONS ARE IN MILLIMETERS UNLESS OTHERWISE SHOWN

Caltrans Metric

DIST.	COUNTY	ROUTE	KILOMETER POST TOTAL PROJECT	SHEET NO.	TOTAL SHEETS
08	SBd	62			

REGISTERED CIVIL ENGINEER — PROFESSIONAL ENGINEER TO B. SAMPLE No. 999999 Exp. 3-31-00 CIVIL STATE OF CALIFORNIA

PLANS APPROVAL DATE

The State of California or its officers or agents shall not be responsible for the accuracy or completeness of electronic copies of this plan sheet.

STANDARD DRAWING

FILE NO. XS 22-18	DESIGN	BY M. TRAFFALIS	CHECKED E. THORKILDSEN	APPROVAL RECOMMENDED BY
DESIGN DATE 8/92	DETAILS	BY R. YEE	CHECKED E. THORKILDSEN	DESIGN SUPERVISOR
	SUBMITTED BY M. HA			

1 Revised detail 3 Added new detail
2 Deleted detail

STATE OF CALIFORNIA DEPARTMENT OF TRANSPORTATION

DIVISION OF STRUCTURES STRUCTURE DESIGN

BRIDGE NO. 54-624
KILOMETER POST 46.7

MAIN STREET OVERCROSSING
STRUCTURE APPROACH TYPE N(9S)

922AMD02.DGN REV.4 CH 9-3-97

ORIGINAL SCALE IN MILLIMETERS FOR REDUCED PLANS 0 10 20 30 40 50 60 70 80 90 100

DISREGARD PRINTS BEARING EARLIER REVISION DATES → REVISION DATES (PRELIMINARY STAGE ONLY) 7-24-95 1-9-97 1-22-97 4-11-97 5-20-97

SHEET 14 OF 18

RELEASED 11-2-92

DIST.	COUNTY	ROUTE	KILOMETER POST TOTAL PROJECT	SHEET NO.	TOTAL SHEETS
08	SBd	62			

Caltrans Metric

T. B. Sample
REGISTERED CIVIL ENGINEER

REGISTERED PROFESSIONAL ENGINEER TO B. SAMPLE No. 999999 Exp. 3-31-00 CIVIL STATE OF CALIFORNIA

PLANS APPROVAL DATE

The State of California or its officers or agents shall not be responsible for the accuracy or completeness of electronic copies of this plan sheet.

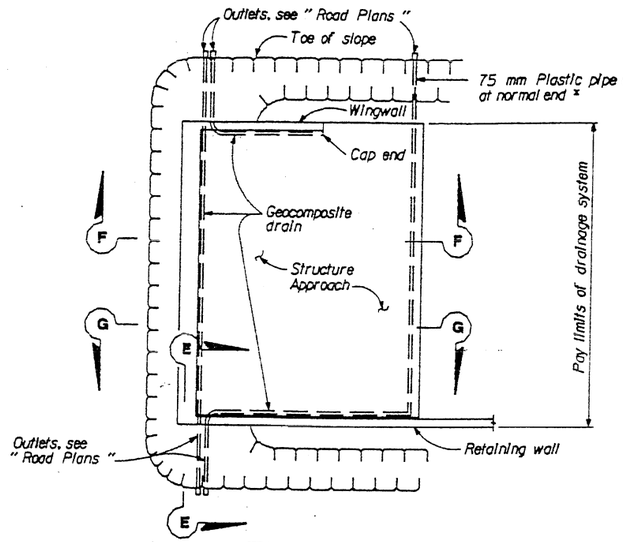

TYPICAL PLAN

* For pipe layout at staggered end, see " Detail B."

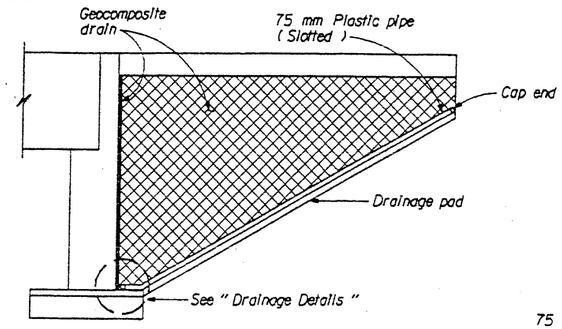

CANTILEVER WINGWALL SECTION F-F

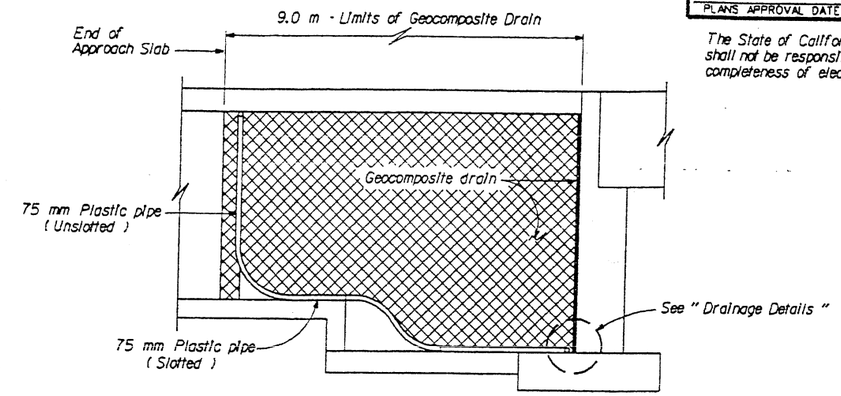

RETAINING WALL WINGWALL SECTION G-G

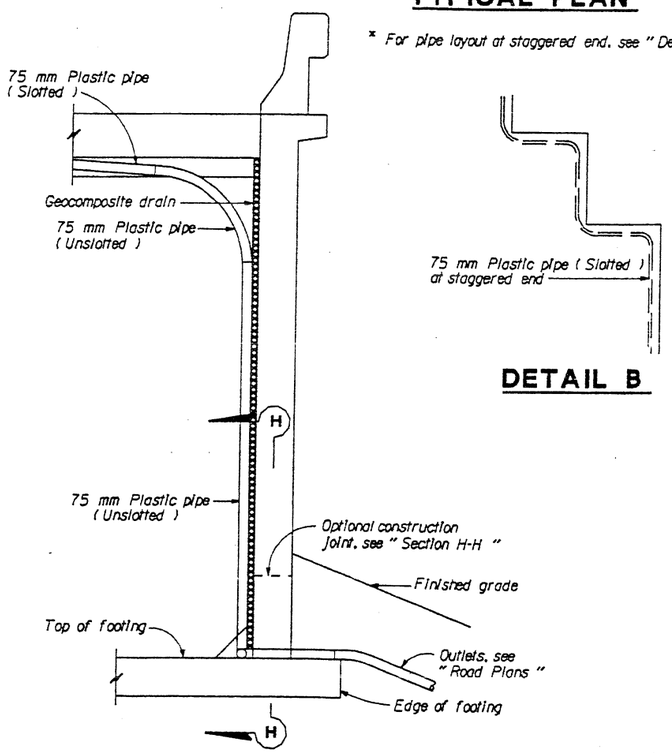

DETAIL B

SECTION E-E

NOTE: Bends and junctions in 75 mm plastic pipe are 750 mm radius min.

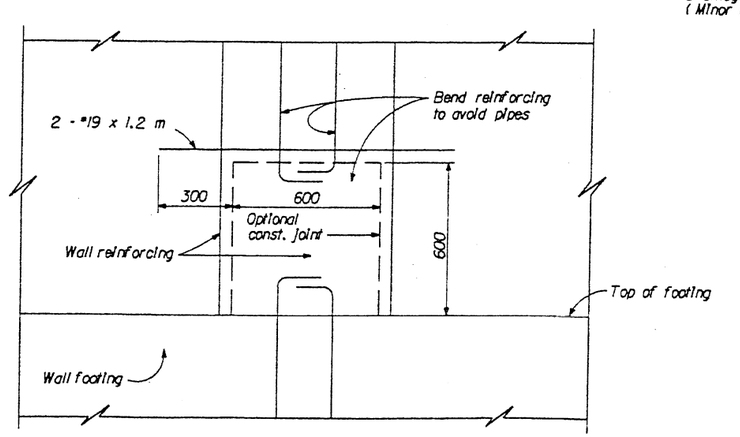

SECTION H-H

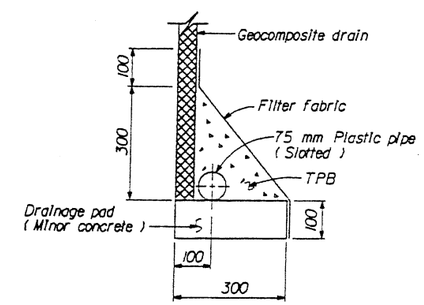

WITHOUT FOOTING

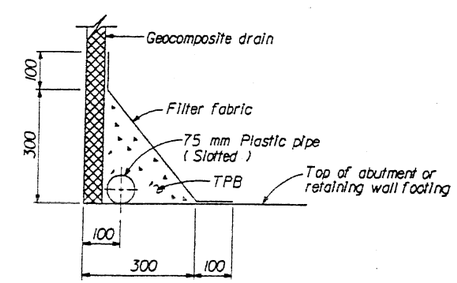

WITH FOOTING

DRAINAGE DETAILS

NO SCALE
ALL DIMENSIONS ARE IN MILLIMETERS UNLESS OTHERWISE SHOWN

STANDARD DRAWING			
FILE NO. XS 22-17	DESIGN BY M. TRAFFALIS	CHECKED E. THORKILDSEN	APPROVAL RECOMMENDED BY
DESIGN DATE 8/92	DETAILS BY R. YEE	CHECKED E. THORKILDSEN	DESIGN SUPERVISOR
	SUBMITTED BY M. HA		

STATE OF CALIFORNIA DEPARTMENT OF TRANSPORTATION

DIVISION OF STRUCTURES STRUCTURE DESIGN

BRIDGE NO. 54-624

KILOMETER POST 46.7

MAIN STREET OVERCROSSING

STRUCTURE APPROACH DRAINAGE DETAILS

922AMD03.DGN REV.4 CH 9-2-97

ORIGINAL SCALE IN MILLIMETERS FOR REDUCED PLANS 0 10 20 30 40 50 60 70 80 90 100

CU
EA

DISREGARD PRINTS BEARING EARLIER REVISION DATES

REVISION DATES (PRELIMINARY STAGE ONLY) 7-24-95 1-9-97 1-22-97 4-11-97 6-20-97

SHEET 15 OF 19

RELEASED 11-8-92

DIST.	COUNTY	ROUTE	KILOMETER POST TOTAL PROJECT	SHEET NO.	TOTAL SHEETS
08	SBd	62			

REGISTERED CIVIL ENGINEER — REGISTERED PROFESSIONAL ENGINEER TO B. SAMPLE No. 999999 Exp. 3-31-00 CIVIL STATE OF CALIFORNIA

PLANS APPROVAL DATE

Caltrans Metric

The State of California or its officers or agents shall not be responsible for the accuracy or completeness of electronic copies of this plan sheet.

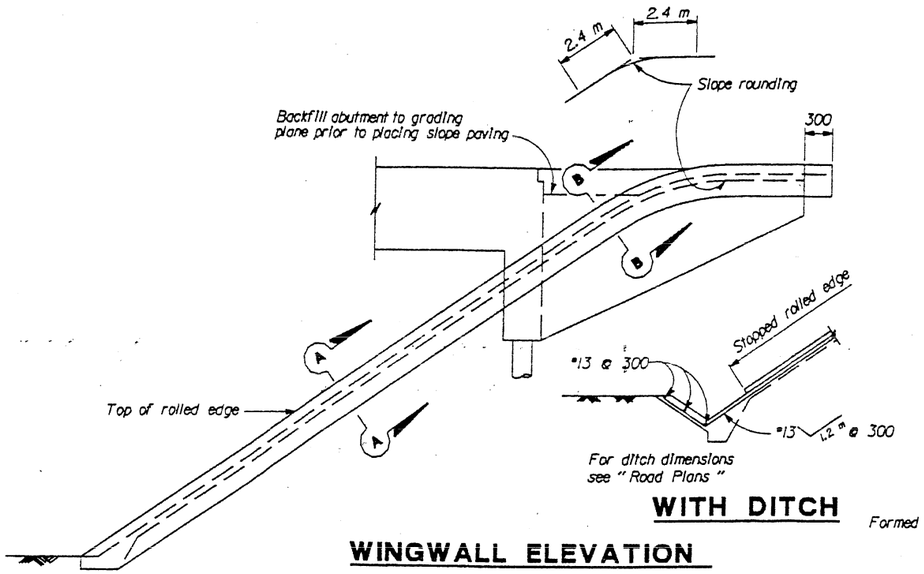

WITH DITCH

WINGWALL ELEVATION

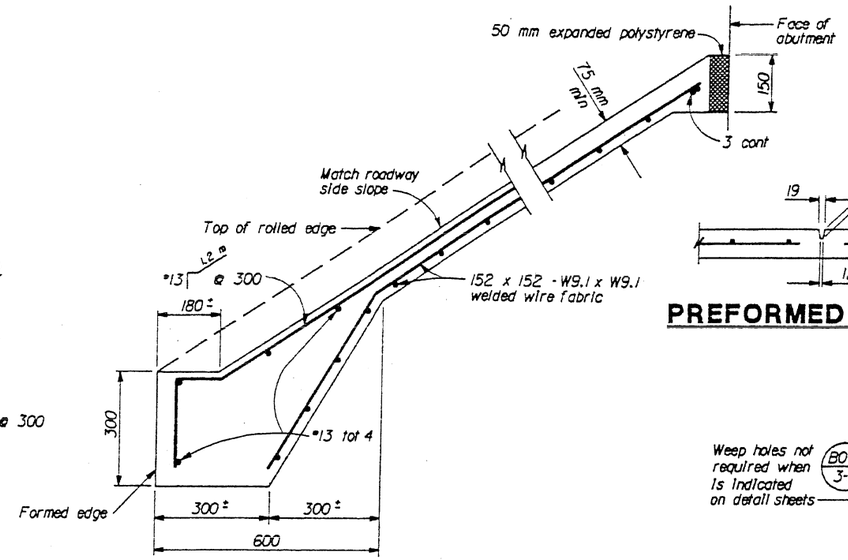

TYPICAL SECTION - CONCRETE PAVING

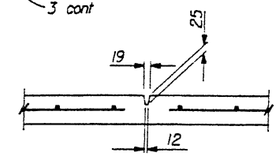

PREFORMED GROOVE

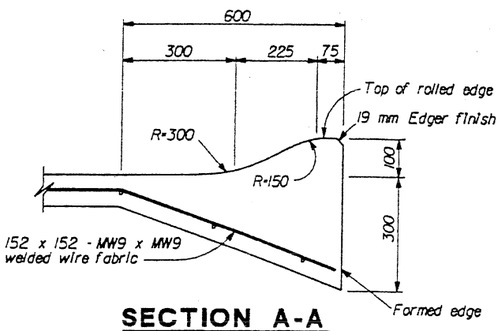

SECTION A-A

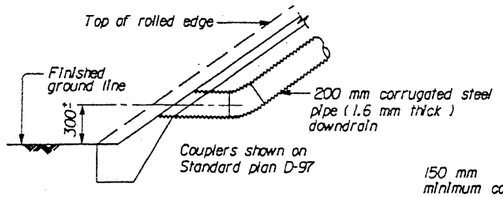

TYPICAL - NO CURB

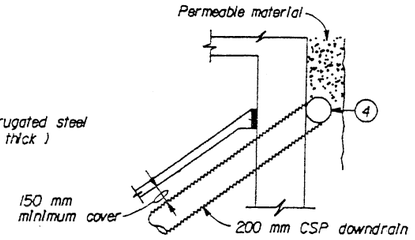

TYPICAL - DRAIN CONNECTION

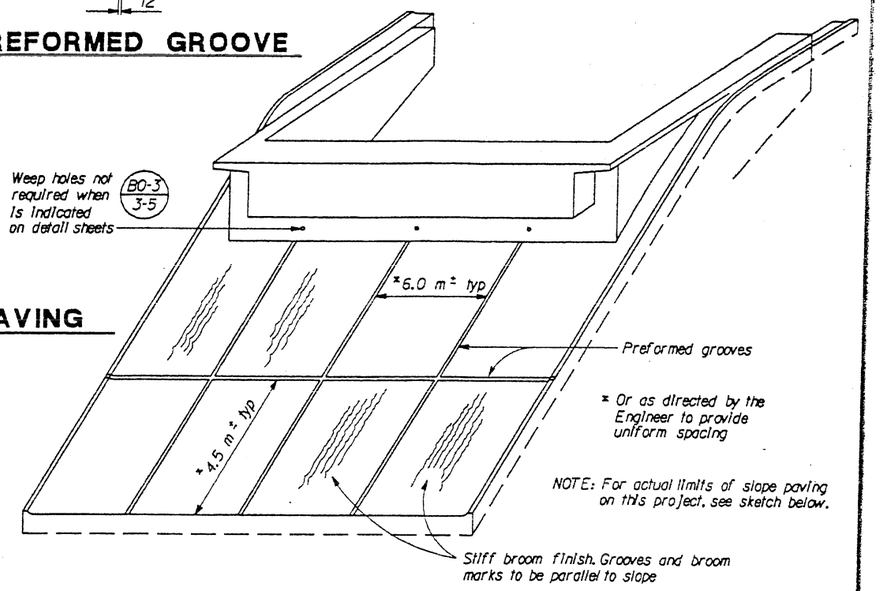

PICTORIAL VIEW OF TYPICAL INSTALLATION

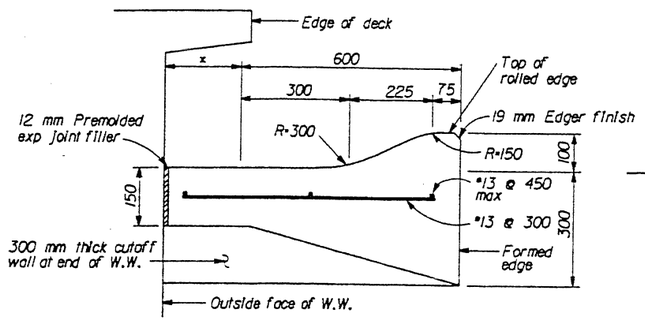

SECTION B-B

* This dimension becomes zero when edge of deck is at outside face of W.W.

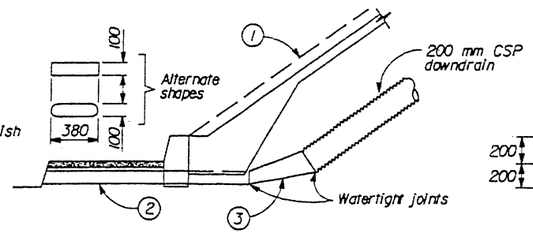

TYPICAL - WITH SIDEWALK

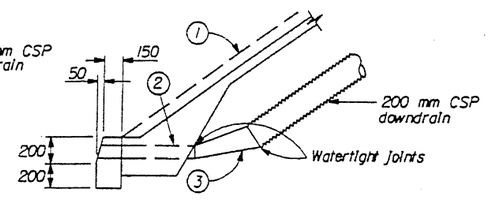

TYPICAL - WITH CURB

DRAINAGE DETAILS

Note: Drainage details are only applicable when B0-3 3-5 is indicated on detail sheets.

(1) Top of rolled edge

(2) Conduit: 1.6 mm galv corrugated steel or 2.8 mm smooth galv steel

(3) Taper: 1.6 mm galv corrugated steel or 2.8 mm smooth galv steel

(4) 200 mm perforated steel pipe (1.6 mm thick) underdrain behind abutment. Connect to downdrain as shown on limits of Slope Paving & Drainage layout.

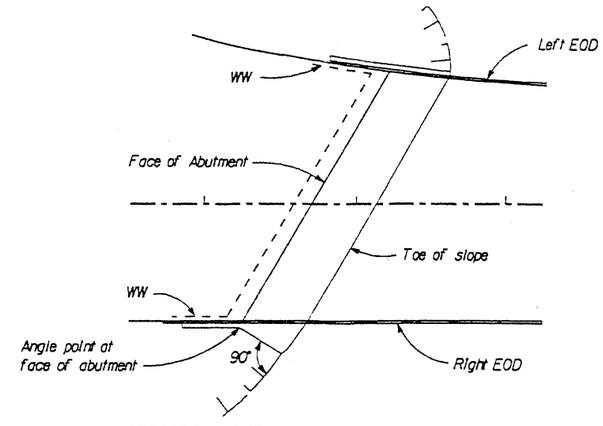

LIMITS OF SLOPE PAVING

NO SCALE

Abutment 1 shown. Abutment 3 similar.

ALL DIMENSIONS ARE IN MILLIMETERS UNLESS OTHERWISE SHOWN

STANDARD DRAWING				
FILE NO. XS 22-11	DESIGN	BY	CHECKED	APPROVAL RECOMMENDED BY
DESIGN DATE 3/89	DETAILS	BY R. YEE	CHECKED	
	SUBMITTED BY C.W. PURKISS			DESIGN SUPERVISOR

STATE OF CALIFORNIA DEPARTMENT OF TRANSPORTATION

DIVISION OF STRUCTURES STRUCTURE DESIGN

BRIDGE NO. 54-624

KILOMETER POS 46.7

MAIN STREET OVERCROSSING

SLOPE PAVING - FULL SLOPE

922AWD04.DGN REV.3 CH 9-2-97

ORIGINAL SCALE IN MILLIMETERS FOR REDUCED PLANS 0 10 20 30 40 50 60 70 80 90 100

CU 08325
EA 37020K

DISREGARD PRINTS BEARING EARLIER REVISION DATES → REVISION DATES (PRELIMINARY STAGE ONLY) 7-24-95 1-9-97 1-22-97 4-11-97 6-20-97

SHEET 16 OF 18

DIST.	COUNTY	ROUTE	KILOMETER POSTS TOTAL PROJECT	SHEET NO.	TOTAL SHEETS
08	SBd				

REGISTERED ENGINEERING GEOLOGIST 6/3/97

REGISTERED GEOLOGIST I. DYE DIRT No. 9944 CERTIFIED ENGINEERING GEOLOGIST STATE OF CALIFORNIA

PLANS APPROVAL DATE

Caltrans Metric

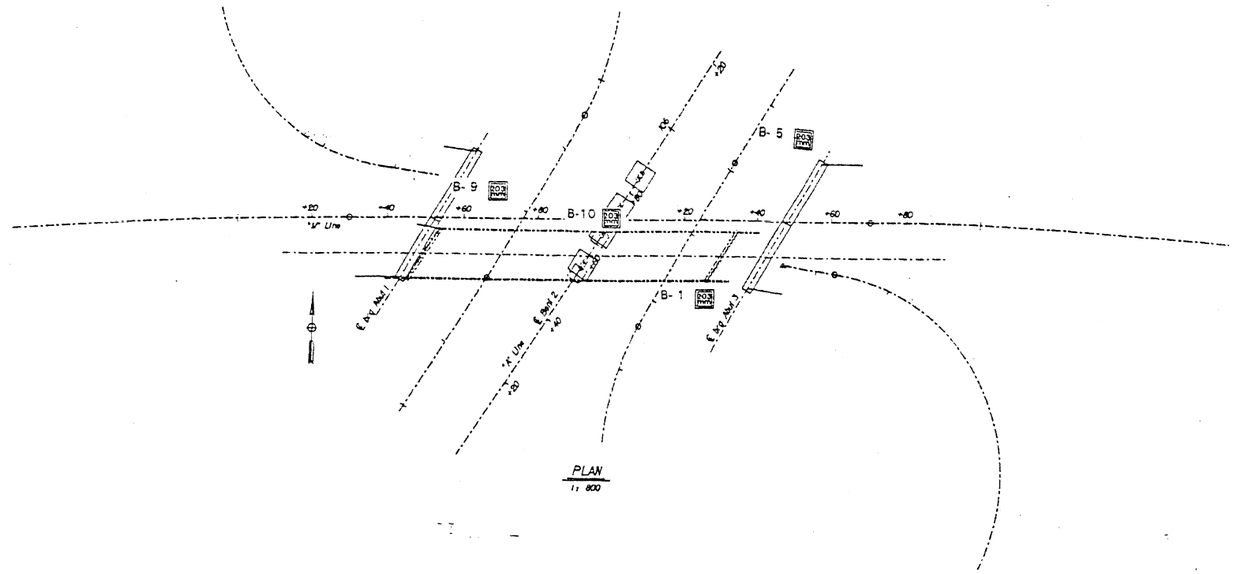

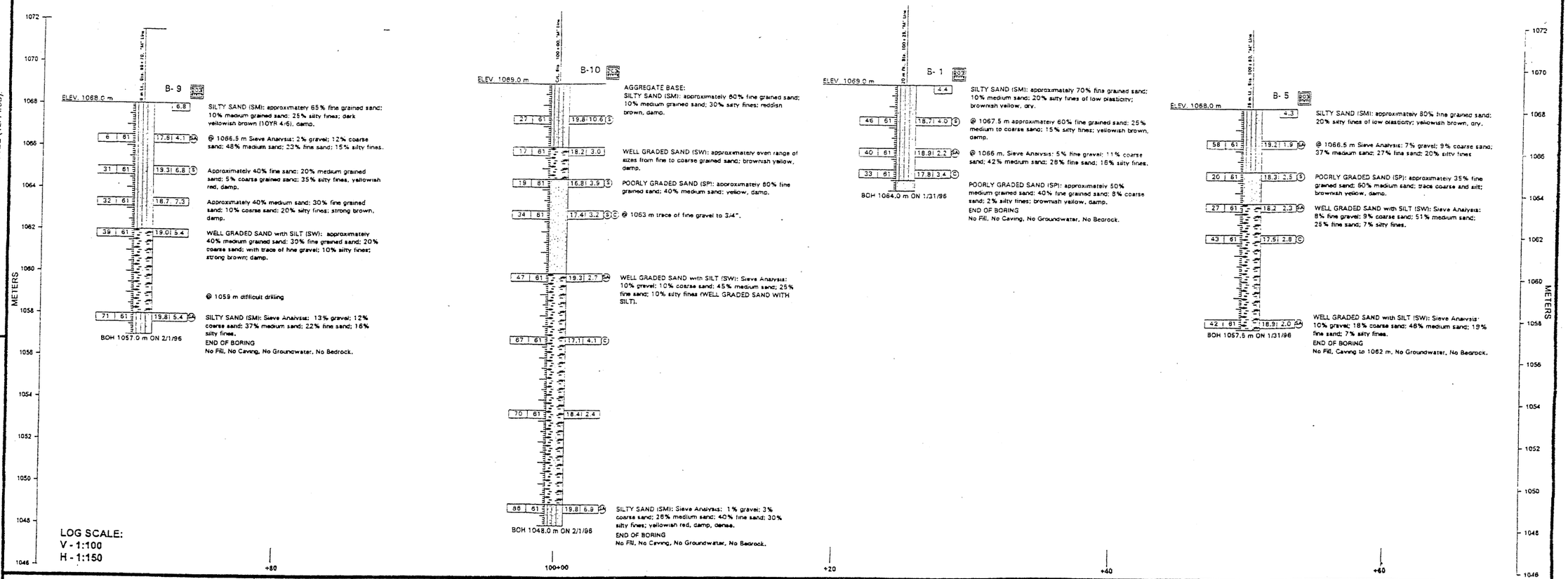

LOG SCALE:
V - 1:100
H - 1:150

LEGEND OF BORING OPERATIONS

B- 5 — Boring No. (Diameter of auger) — Test Pit No.
Description of Material
Dry unit weight (kN/m³) — % Moisture — Shear strength test — Sieve analysis test — Consolidation test
Date
Penetration index (Blows x 63.5 kg hammer x 760 mm drop) — Size of sampler (mm)
Top of Hole Elevation — Datum
Bottom of hole elevation

NOTES:
-BLOWS ARE CONVERTED TO STANDARD PENETRATION TEST DATA
-BORING ELEVATIONS ARE BASED ON TOPOGRAPHY FROM CONCEPTUAL GEOMETRIC DRAWING, MAIN STREET/ RTE 15 INTERCHANGE (12/14/95).

FE WET CORE (Diameter of auger) — SAMPLE BORING (DWT) — ROTARY SAMPLE BORING (RWT) — ROTARY BORING (DRY) — TEST PIT — DIAMOND CORE BORING — JET BORING — ELECTRONIC CONE PENETROMETER

LEGEND OF EARTH MATERIALS

GRAVEL — CLAYEY SILT — SAND — PEAT and/or ORGANIC SATTER — SILT — FILL MATERIAL — CLAY — IGNEOUS ROCK — SANDY CLAY or CLAYEY SAND — SEDIMENTARY ROCK — SANDY SILT or SILTY SAND — METAMORPHIC — SILTY CLAY

CONSISTENCY CLASSIFICATION FOR SOIL

According to the Standard Penetration Test

Penetration Index (Blows / 0.3 m)	Granular	Cohesive
0-4	Very Loose	Very Soft
5-9	Loose	Soft
10-19	Slightly compact	Stiff
20-34	Compact	Very Stiff
35-69	Dense	Hard
>70	Very Dense	Very Hard

NOTE: Classification of earth material as shown on this sheet is based upon field inspection and is not to be construed to imply mechanical analysis.

ENGINEERING SERVICE CENTER	STRUCTURE FOUNDATIONS
DRAWN BY	
CHECKED BY	

FIELD INVESTIGATION BY:
J. JOHNSTON
LOR Geotechnical Group, Inc.
6121 Quail Valley Court
Riverside, California 92507

State of CALIFORNIA
DEPARTMENT OF TRANSPORTATION

DIVISION OF STRUCTURES
STRUCTURE DESIGN

BRIDGE NO.
54-624
KILOMETER POST

MAIN STREET OVERCROSSING
LOG OF TEST BORINGS

DIST	COUNTY	ROUTE	POST MILES TOTAL PROJECT	SHEET NO.	TOTAL SHEETS
08	SBd				

TO ACCOMPANY PLANS DATED

The State of California or its officers or agents shall not be responsible for the accuracy or completeness of electronic copies of this plan sheet.

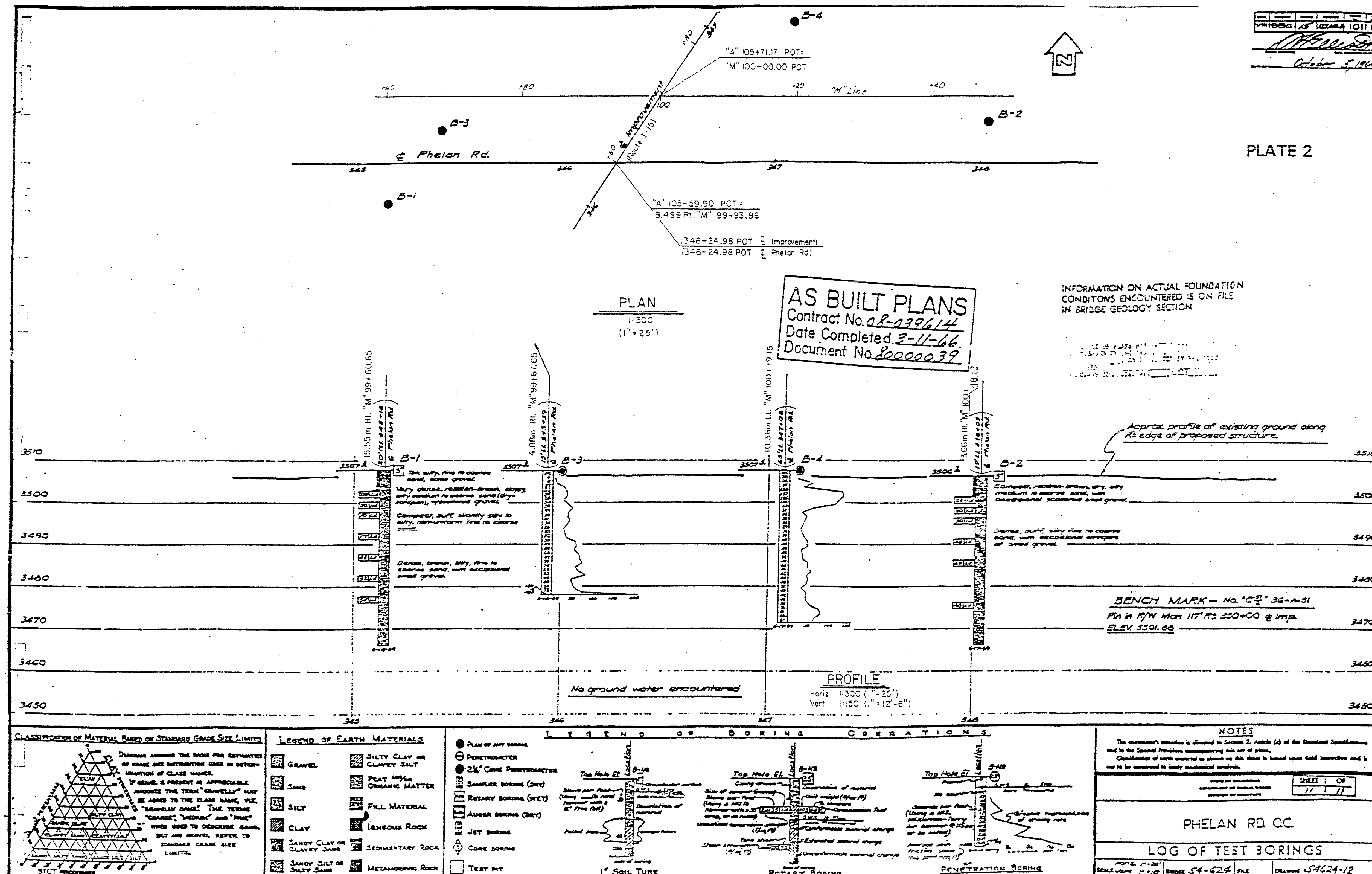

DESIGN OVERSIGHT	NOTE: ADDITIONAL AS-BUILT FOUNDATION DATA MAY BE AVAILABLE AT THE DIVISION OF NEW TECHNOLOGY, MATERIALS AND RESEARCH 5900 FOLSOM BOULEVARD, SACRAMENTO, CALIFORNIA 95819
SIGNOFF DATE	

	BY	CHECKED
DESIGN	I. B. Engineer	B. A. Checker
DETAILS	I. B. Engineer	B. A. Checker
QUANTITIES	H. P. Calc	B. A. Checker

PREPARED FOR THE STATE OF CALIFORNIA DEPARTMENT OF TRANSPORTATION

TO B. SAMPLE
PROJECT ENGINEER

BRIDGE NO. 54-624
KILOMETER POST 46.7

MAIN STREET OVERCROSSING
AS-BUILT LOG OF TEST BORINGS

ORIGINAL SCALE IN INCHES FOR REDUCED PLANS 0 1 2 3

CU
EA

DISREGARD PRINTS BEARING EARLIER REVISION DATES

REVISION DATES (PRELIMINARY STAGE ONLY)