RELEASED 8-26-03

DIST.	COUNTY	ROUTE	KILOMETER POST TOTAL PROJECT	SHEET NO.	TOTAL SHEETS

Caltrans Metric

REGISTERED ENGINEER - CIVIL

PLANS APPROVAL DATE

REGISTERED PROFESSIONAL ENGINEER No. Exp. CIVIL STATE OF CALIFORNIA

The State of California or its officers or agents shall not be responsible for the accuracy or completeness of electronic copies of this plan sheet.

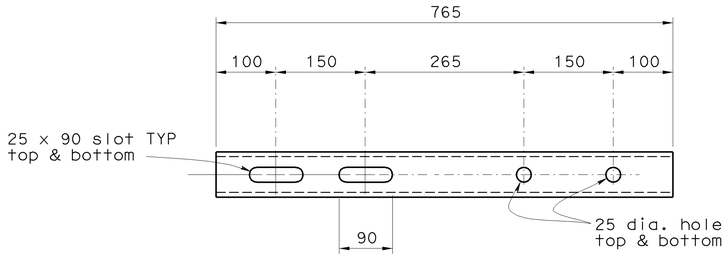

EXPANSION SLEEVE DETAIL

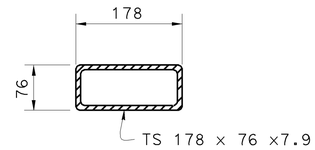

SECTION SLEEVE

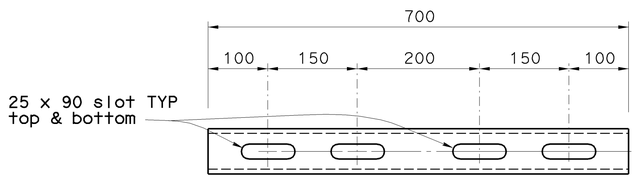

STANDARD SLEEVE DETAIL

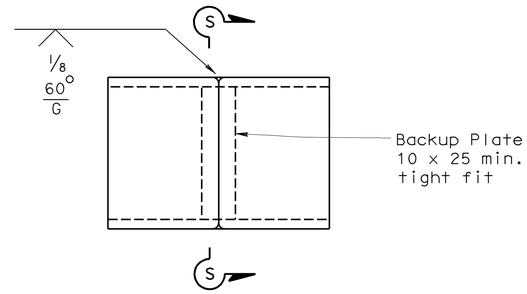

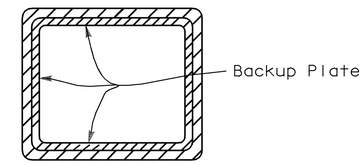

SECTION S-S

ALTERNATE TUBE WELDED SPLICE

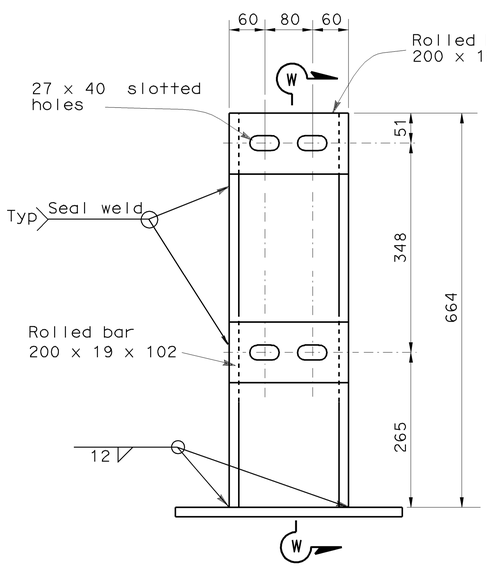

ELEVATION

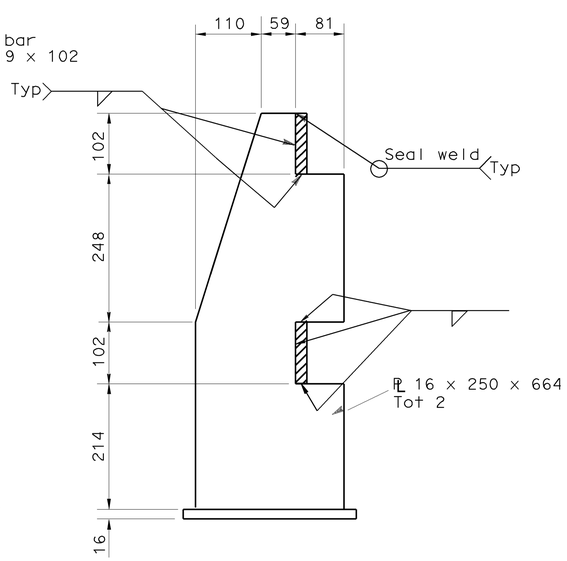

SECTION W-W

POST DETAIL

Scale 1:5

MATERIAL

A) All structural steel shall be A36, Structural tubing shall be A500 grade B except as noted

B) All stud bolts shall be high strength conforming to ASTM A325 Galvanized and wrench tight

C) Stud bolts shall be ASTM A108 and torque to 136 N-m.

GENERAL NOTES

1) All structural steel shall be galvanized after fabrication
2) Proposed railing layout shown is approximate. Final layout shall be reviewed by engineer before fabrication
3) Venting and pick-up holes in rails and sleeves shall be shown on fabricator's shop plans
4) Anchor bolts may be tack welded (shop or field) to anchorage.
5) All rough edges on posts and rails shall be ground smooth
6) Tubing shall be bent or fabricated to fit horizontal curve when curve is less than 273 meters
7) After installation of rail, the exposed rail bolt threads shall be painted with two coats of zinc rich paint conforming to the requirement of section 75-1.05 galvanizing of The Standard Specifications.
8) The alternative welded splice may be used in lieu of The Standard Splice.
9) Each rail length shall be continuous over a minimum of two posts.
10) The fabricator shall check that the tubular sleeves splices conform to the dimensions indicated to assure proper clearance.
11) Except for expansion splices, not more than one splice shall be permitted per same side of post
12) See contract plans for approach guardrail details

STANDARD DRAWING

FILE NO. xs16-200-2	DESIGN BY N ABDIN	CHECKED VINDY KWOK	APPROVAL RECOMMENDED BY
DRAWING DATE 10/02	DETAILS BY P C WELLS	CHECKED VINDY KWOK	DESIGN SUPERVISOR
	SUBMITTED BY N ABDIN		

STATE OF CALIFORNIA DEPARTMENT OF TRANSPORTATION

DIVISION OF STRUCTURES STRUCTURE DESIGN

BRIDGE NO.

KILOMETER POST

RAILING - STEEL TYPE ST-10 RAIL

DETAILS NO. 2

DS OSD 2147A (METRIC) (REV. X/XX/XX)

ORIGINAL SCALE IN MILLIMETERS FOR REDUCED PLANS 0 10 20 30 40 50 60 70 80 90 100

CU EA

DISREGARD PRINTS BEARING EARLIER REVISION DATES

REVISION DATES (PRELIMINARY STAGE ONLY)

SHEET 2 OF 3

USERNAME => jsanchez

xs16-200-2.dgn

DATE PLOTTED => 01-OCT-2003 TIME PLOTTED => 14:58