RELEASED 6-4-98

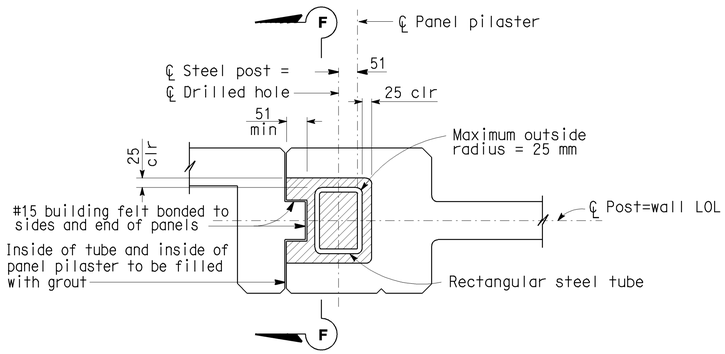

PLAN

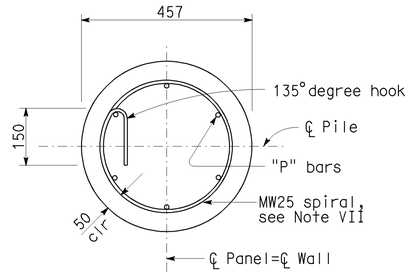

SECTION D-D

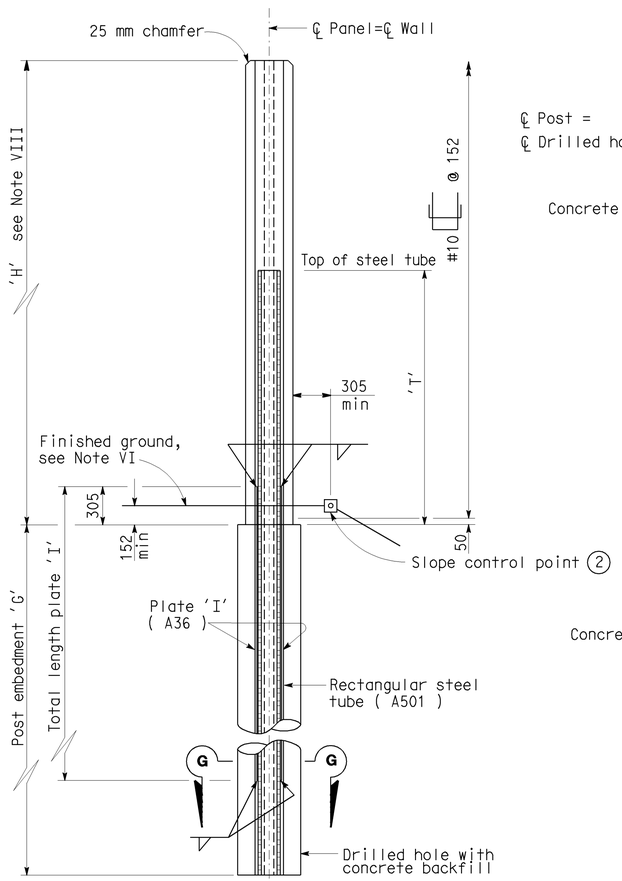

SECTION F-F

STRUCTURAL STEEL TUBE POST

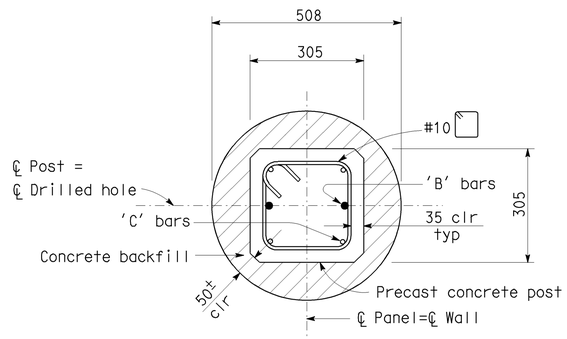

SECTION E-E

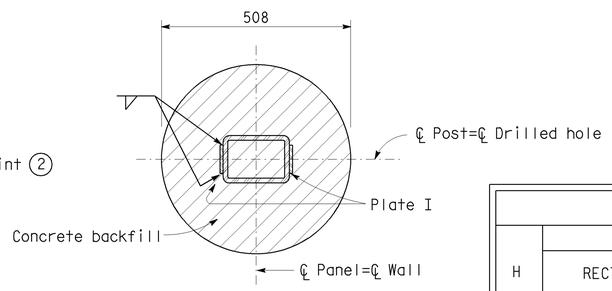

SECTION G-G

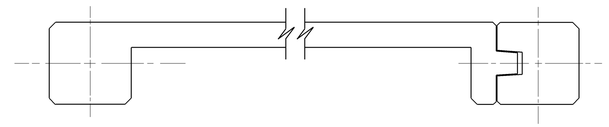

CONCRETE PILASTER POST

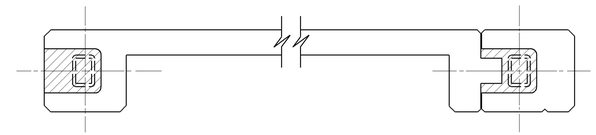

STRUCTURAL STEEL TUBE POST

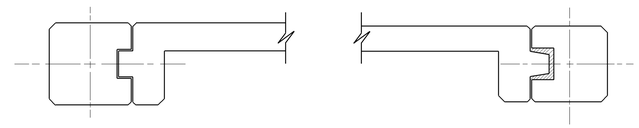

CAST-IN-PLACE CONCRETE POST

PRECAST CONCRETE POST

END POST SECTIONS

NOTES:

I: For details not shown, see "SOUNDWALL-OFFSET P/C CONCRETE PANEL -- PANEL DETAILS NO.1, PANEL DETAILS NO.2, PANEL DETAILS NO.3 and POST DETAILS NO.1" sheets.

VII: Where splices are required, spiral reinforcement shall be lapped 80 diameters minimum. A 135 degree hook that is hooked around a longitudinal bar shall be used to terminate the ends of the spiral reinforcement at lapped splices and at the top and bottom of the pile.

VIII: For those posts with panels of different heights on each side of the post or with panels that vary in height, use the tabular values of the largest 'H'.

STRUCTURAL STEEL TUBE POST

H	GROUND LINE 1						GROUND LINE 2			LENGTH "T"	H
	RECTANGULAR STEEL TUBE		EMBEDMENT "G"		PLATE "I" (mm)		RECTANGULAR STEEL TUBE	EMBED. "G"	PLATE "I" (mm)		
	14364 Pa	21546 Pa	14364 Pa	21546 Pa	14364 Pa	21546 Pa					
1829	TS 178x127x4.8	TS 178x127x4.8	2210	1600			TS 178x127x4.8	3200		991	1829
2438	178x127x4.8	178x127x4.8	2591	1829			178x127x7.9	3810		1376	2438
3048	178x127x7.9	178x127x7.9	2895	2134			178x127x12.7	4267		1676	3048
3658	178x127x12.7	178x127x12.7	3200	2286			178x127x12.7	4724	PL 6.4x76x3962	2057	3658
4267	178x127x12.7	178x127x12.7	3200	2286			178x127x12.7	4724	PL 6.4x76x3658	2438	4267
4877	178x127x12.7	178x127x12.7	3429	2667	PL 6.4x76x2438	PL 6.4x76x1829	178x127x12.7	5105	PL 9.5x76x4267	3048	4877

1 Ground line level on both sides of wall.

2 Ground line level on one side of wall and sloped on the opposite side.

NO SCALE

ALL DIMENSIONS ARE IN MILLIMETERS UNLESS OTHERWISE SHOWN

Caltrans Metric

DIST.	COUNTY	ROUTE	KILOMETER POST TOTAL PROJECT	SHEET NO.	TOTAL SHEETS

REGISTERED ENGINEER - CIVIL

PLANS APPROVAL DATE

REGISTERED PROFESSIONAL ENGINEER No. Exp. CIVIL STATE OF CALIFORNIA

The State of California or its officers or agents shall not be responsible for the accuracy or completeness of electronic copies of this plan sheet.

STANDARD DRAWING

FILE NO. xs15-340-2	DESIGN BY S. STAKE	CHECKED R.W. BISHOP	APPROVAL RECOMMENDED BY
DRAWING DATE 5/98	DETAILS BY R. YEE	CHECKED R.W. BISHOP	DESIGN SUPERVISOR
	SUBMITTED BY R.W. BISHOP		

STATE OF CALIFORNIA DEPARTMENT OF TRANSPORTATION

DIVISION OF STRUCTURES STRUCTURE DESIGN

BRIDGE NO.

KILOMETER POST

SOUNDWALL - OFFSET P/C CONCRETE PANEL

POST DETAILS NO. 2

DS OSD 2147A (METRIC) (REV. 2/25/97)

ORIGINAL SCALE IN MILLIMETERS FOR REDUCED PLANS 0 10 20 30 40 50 60 70 80 90 100

CU EA

DISREGARD PRINTS BEARING EARLIER REVISION DATES

REVISION DATES (PRELIMINARY STAGE ONLY) SHEET OF

USERNAME => jsanchez

xs15-340-2.dgn

DATE PLOTTED => 07-NOV-2003 TIME PLOTTED => 14:53