RELEASED 6-2-98

DIST.	COUNTY	ROUTE	KILOMETER POST TOTAL PROJECT	SHEET NO.	TOTAL SHEETS

Caltrans Metric

REGISTERED ENGINEER - CIVIL

PLANS APPROVAL DATE

REGISTERED PROFESSIONAL ENGINEER No. Exp. CIVIL STATE OF CALIFORNIA

The State of California or its officers or agents shall not be responsible for the accuracy or completeness of electronic copies of this plan sheet.

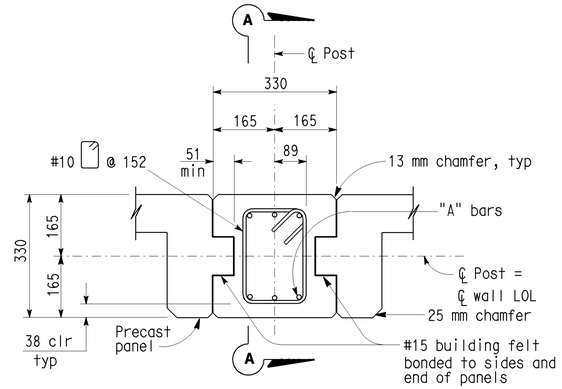

PLAN

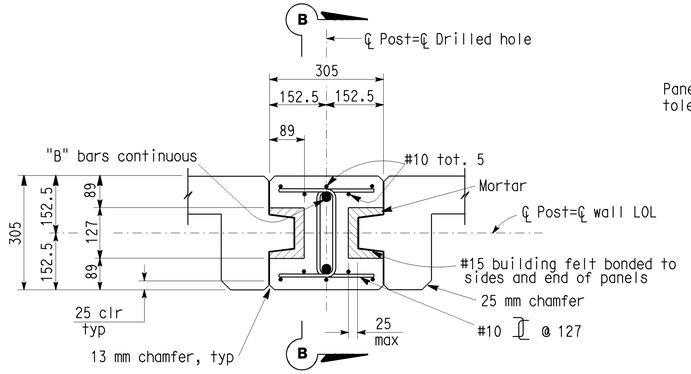

PLAN

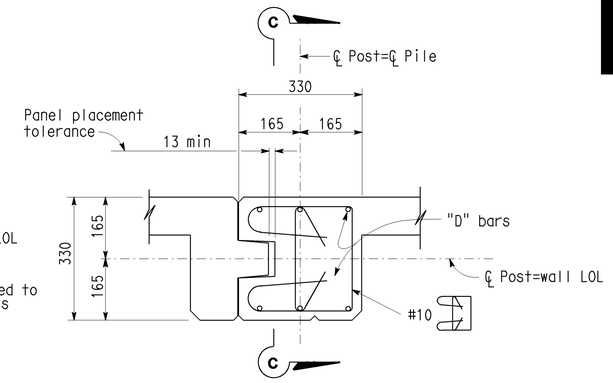

PLAN

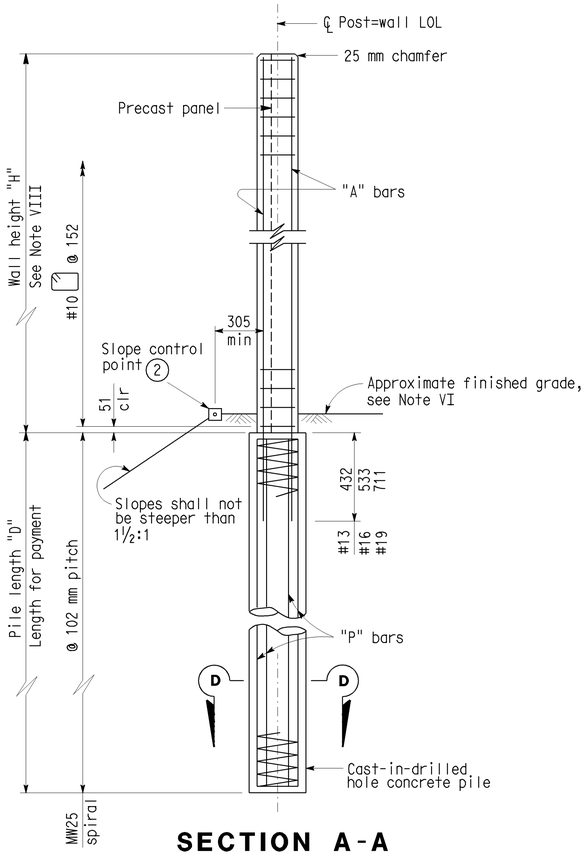

SECTION A-A
CAST-IN-PLACE CONCRETE POST

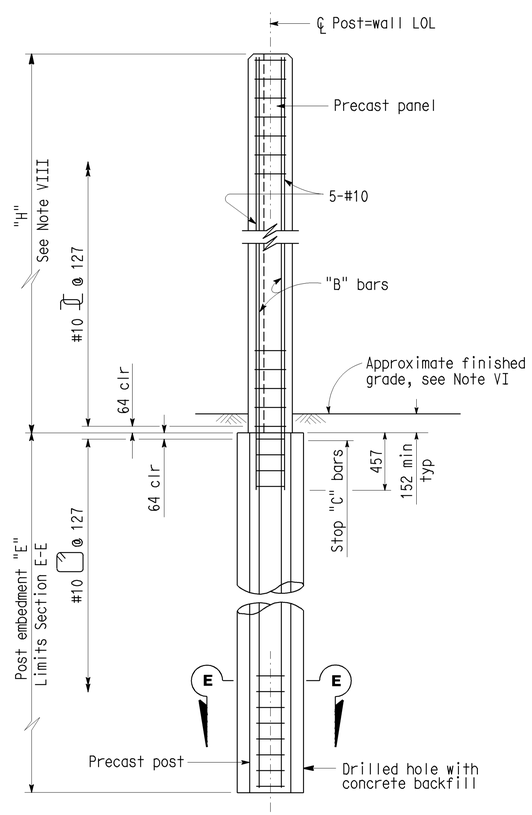

SECTION B-B
PRECAST CONCRETE POST

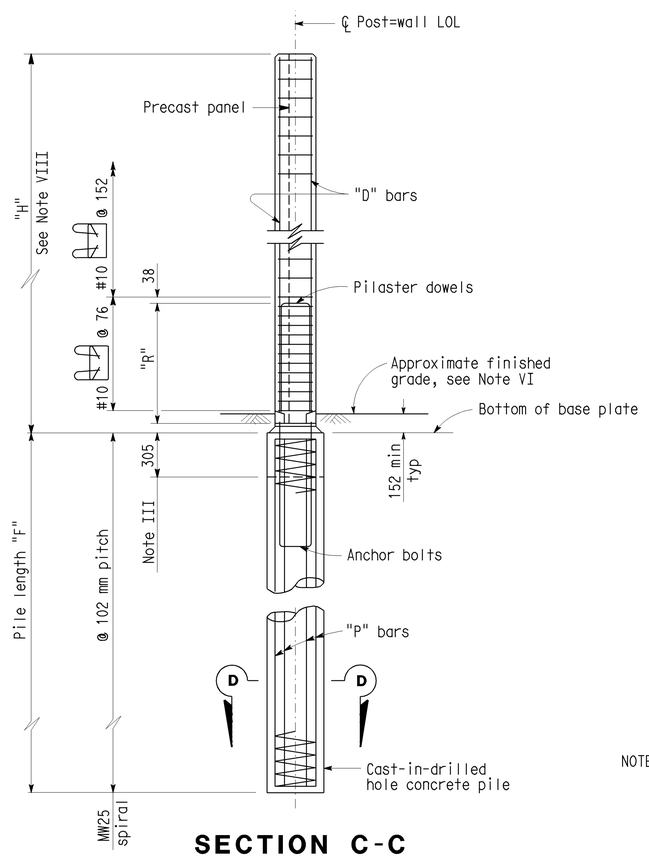

SECTION C-C
CONCRETE PILASTER POST

CAST-IN-PLACE CONCRETE POST

H	A BARS	P BARS	LENGTH D: GROUND LINE (1) 14364 Pa	LENGTH D: GROUND LINE (1) 21546 Pa	LENGTH D: GROUND LINE (2)	H
1829	4-#13	6-#13	2286	1676	3429	1829
2438	4-#13	6-#13 (3)	2743	1981	3962	2438
3048	6-#13	6-#16	3048	2210	4496	3048
3658	6-#16	6-#19	3353	2438	4953	3658
4267	6-#19	6-#19	3353	2438	4953	4267
4877	6-#19	6-#19	3581	2667	5182	4877

PRECAST CONCRETE POST

H	B BARS	C BARS	EMBEDMENT E: GROUND LINE (1) 14364 Pa	EMBEDMENT E: GROUND LINE (1) 21546 Pa	EMBEDMENT E: GROUND LINE (2)	H
1829	2-#13	4-#13	2210	1600	3200	1829
2438	2-#16	4-#16	2591	1829	3810	2438
3048	2-#19	4-#19	2896	2134	4267	3048
3658	2-#22	4-#22	3200	2286	4724	3658
4267	2-#22	4-#22	3200	2286	4724	4267
4877	2-#25	4-#25	3429	2591	5105	4877

CONCRETE PILASTER POST

H	D BARS	P BARS	LENGTH F: GROUND LINE (1) 14364 Pa	LENGTH F: GROUND LINE (1) 21546 Pa	LENGTH F: GROUND LINE (2)	H
1829	6-#13	6-#13	2286	1676	3429	1829
2438	6-#13	6-#13 (3)	2743	1981	3962	2438
3048	6-#16	6-#16	3048	2210	4496	3048
3658	6-#16	6-#19	3353	2438	4953	3658
4267	6-#19	6-#19	3353	2438	4953	4267
4877	6-#19	6-#19	3581	2667	5182	4877

(1) Ground line level on both sides of wall.

(2) Ground line level on one side of wall and sloped on the opposite side.

(3) 6-#16 for piles in sloping ground.

NOTES:

I: For details not shown, see "SOUNDWALL-OFFSET P/C CONCRETE PANEL -- PANEL DETAILS NO.1, PANEL DETAILS NO.2, PANEL DETAILS NO.3 and POST DETAILS NO.2" sheets.

VI: Ground line to be at the same elevation on both sides of the wall. Wall shall not be used to retain earth.

NO SCALE

ALL DIMENSIONS ARE IN MILLIMETERS UNLESS OTHERWISE SHOWN

STANDARD DRAWING

FILE NO. xs15-340-1	DESIGN BY S. STAKE	CHECKED R. BISHOP	APPROVAL RECOMMENDED BY
DRAWING DATE 10/84	DETAILS BY R. YEE	CHECKED R. BISHOP	DESIGN SUPERVISOR
	SUBMITTED BY R. BISHOP		

STATE OF CALIFORNIA DEPARTMENT OF TRANSPORTATION

DIVISION OF STRUCTURES STRUCTURE DESIGN

BRIDGE NO.

KILOMETER POST

SOUNDWALL - OFFSET P/C CONCRETE PANEL

POST DETAILS NO. 1

DS OSD 2147A (METRIC) (REV. 2/25/97)

ORIGINAL SCALE IN MILLIMETERS FOR REDUCED PLANS 0 10 20 30 40 50 60 70 80 90 100

CU EA

DISREGARD PRINTS BEARING EARLIER REVISION DATES

REVISION DATES (PRELIMINARY STAGE ONLY) SHEET OF

USERNAME => jsanchez

xs15-340-1.dgn

DATE PLOTTED => 07-NOV-2003 TIME PLOTTED => 14:53