RELEASED 6-4-98

DIST.	COUNTY	ROUTE	KILOMETER POST TOTAL PROJECT	SHEET NO.	TOTAL SHEETS

Caltrans Metric

REGISTERED ENGINEER - CIVIL

PLANS APPROVAL DATE

REGISTERED PROFESSIONAL ENGINEER No. Exp. CIVIL STATE OF CALIFORNIA

The State of California or its officers or agents shall not be responsible for the accuracy or completeness of electronic copies of this plan sheet.

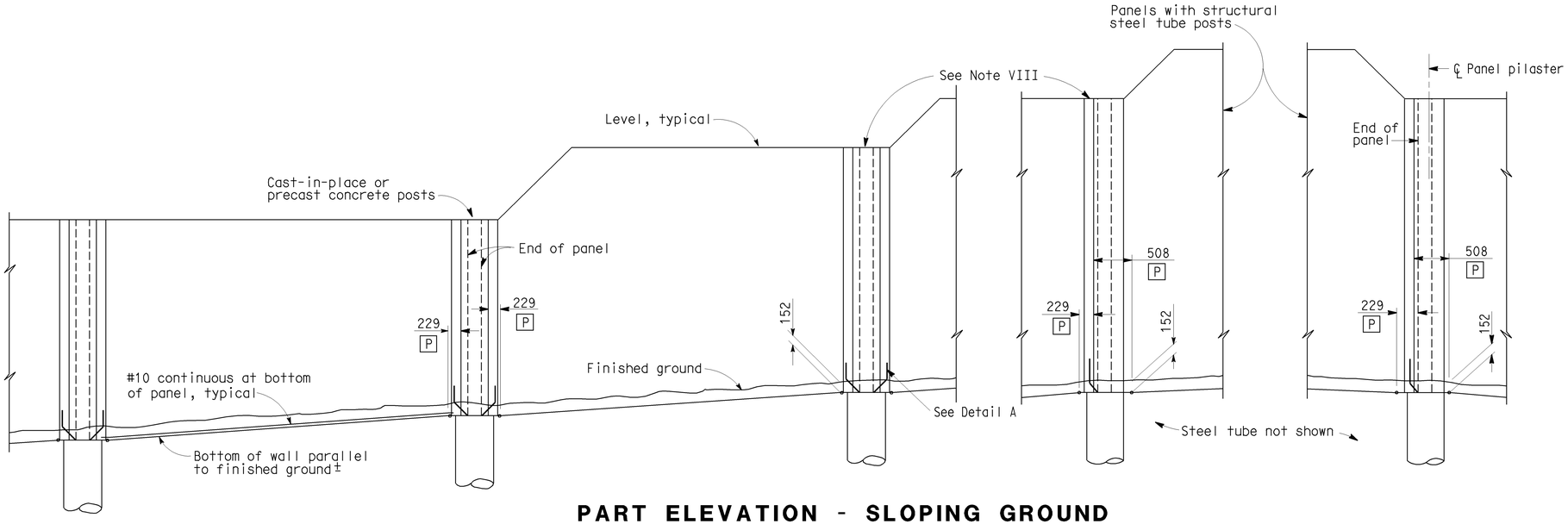

PART ELEVATION - SLOPING GROUND

P End of panels to be level

Note I: For details not shown, see "SOUNDWALL - OFFSET P/C CONCRETE PANEL -- PANEL DETAILS NO.1, PANEL DETAILS NO.2, POST DETAILS NO.1 and POST DETAILS NO. 2" sheets.

Note V: End post data for panel with sloping top to be the same as for the adjacent post.

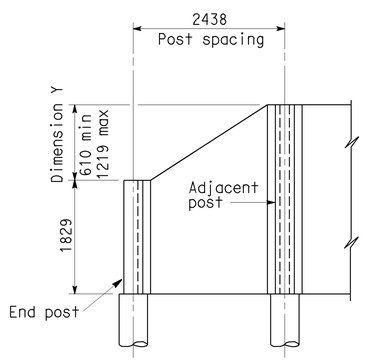

Slope top of end panel when dimension Y exceeds 610 mm only. If dimension Y is less than 610 mm use level panel top.

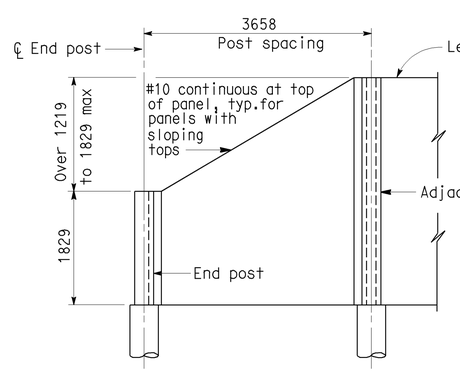

SLOPING PANEL TOP

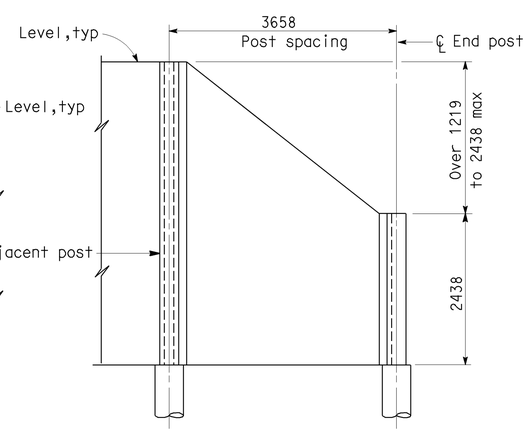

END PANEL DETAILS

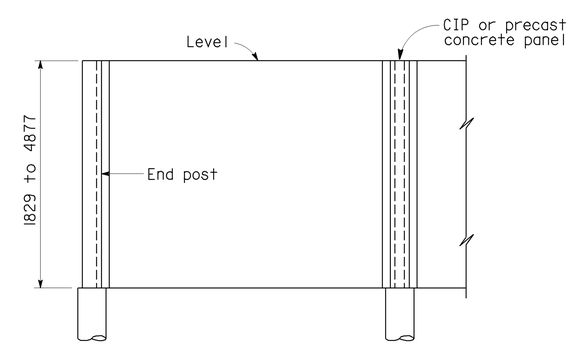

LEVEL PANEL TOP

NO SCALE

ALL DIMENSIONS ARE IN MILLIMETERS UNLESS OTHERWISE SHOWN

STANDARD DRAWING				
FILE NO. xs15-330-5	DESIGN BY S.S. STAKE	CHECKED R.W. BISHOP	APPROVAL RECOMMENDED BY	
DRAWING DATE 10/84	DETAILS BY R. YEE	CHECKED R.W. BISHOP	DESIGN SUPERVISOR	
	SUBMITTED BY PHIL HALE			

STATE OF CALIFORNIA DEPARTMENT OF TRANSPORTATION

DIVISION OF STRUCTURES STRUCTURE DESIGN

BRIDGE NO.

KILOMETER POST

SOUNDWALL - OFFSET P/C CONCRETE PANEL

PANEL DETAILS NO. 3

DS OSD 2147A (METRIC) (REV. 2/25/97)

ORIGINAL SCALE IN MILLIMETERS FOR REDUCED PLANS 0 10 20 30 40 50 60 70 80 90 100

CU EA

DISREGARD PRINTS BEARING EARLIER REVISION DATES

REVISION DATES (PRELIMINARY STAGE ONLY) SHEET OF

USERNAME => jsanchez

xs15-330-5.dgn

DATE PLOTTED => 07-NOV-2003 TIME PLOTTED => 14:52