RELEASED 6-9-98

DIST.	COUNTY	ROUTE	KILOMETER POST TOTAL PROJECT	SHEET NO.	TOTAL SHEETS

Caltrans Metric

REGISTERED ENGINEER - CIVIL

PLANS APPROVAL DATE

REGISTERED PROFESSIONAL ENGINEER No. Exp. CIVIL STATE OF CALIFORNIA

The State of California or its officers or agents shall not be responsible for the accuracy or completeness of electronic copies of this plan sheet.

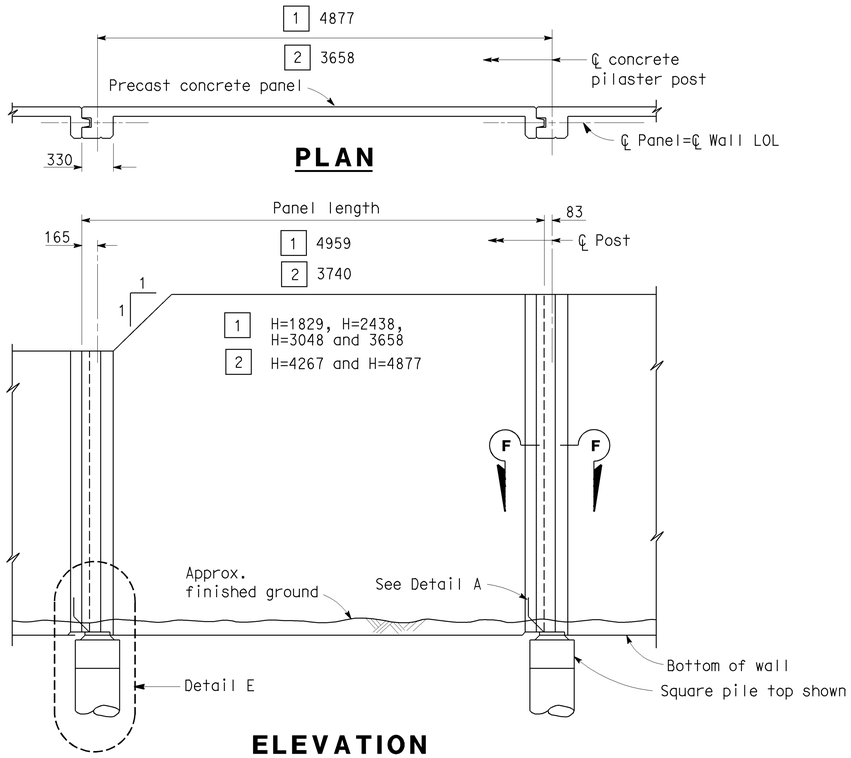

PLAN

ELEVATION
PANELS WITH CONCRETE PILASTER POSTS

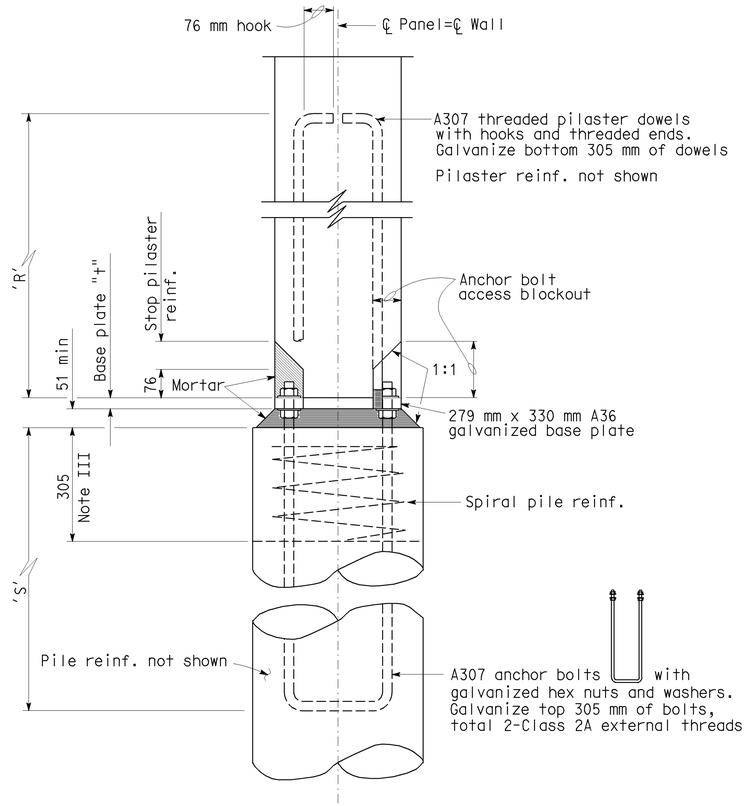

SECTION G-G

Note I: For details not shown, see "SOUNDWALL-OFFSET P/C CONCRETE PANEL -- PANEL DETAILS NO. 1, PANEL DETAILS NO.3 and POST DETAILS NO.1 and POST DETAILS NO. 2" sheet.

Note III: Top 305 mm of pile to be formed. Unless indicated otherwise, the contractor may form the top of pile to any shape. The selected shape must be of sufficient area to fully support the mortar under the base plate. Anchor bolts to be positioned and held to line and grade by a template during placement of pile concrete.

Note IV: Anchor bolt access blockouts to be dry packed with mortar after panels have been positioned and anchor bolt nuts tightened.

TABLE

H	BASE PLATE "t"	ANCHOR BOLT DIAMETER	PILASTER DOWEL DIAMETER	PILASTER REINF.	R	S
1829 & 2438	22.2	19	25	6-#13	914	813
3048	25.4	25	25	6-#16	1016	914
3658	31.8	29	29	6-#16	1016	914
4267	31.8	29	29	6-#19	1118	1016
4877	31.8	29	29	6-#19	1118	1016

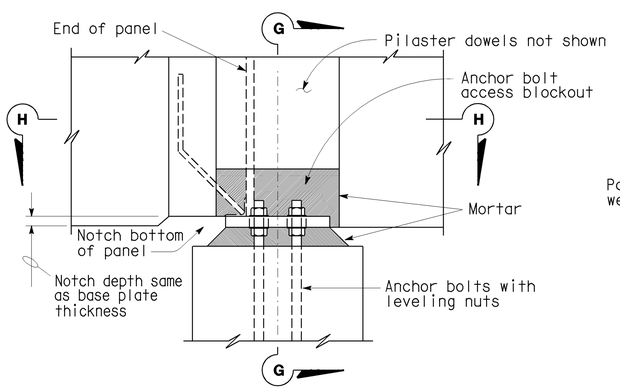

DETAIL E

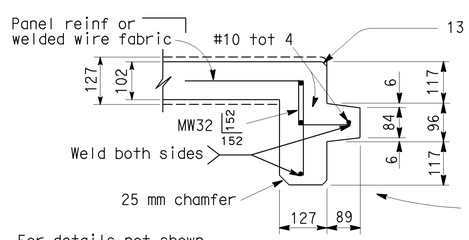

For details not shown, see "Part Panel Section B-B".

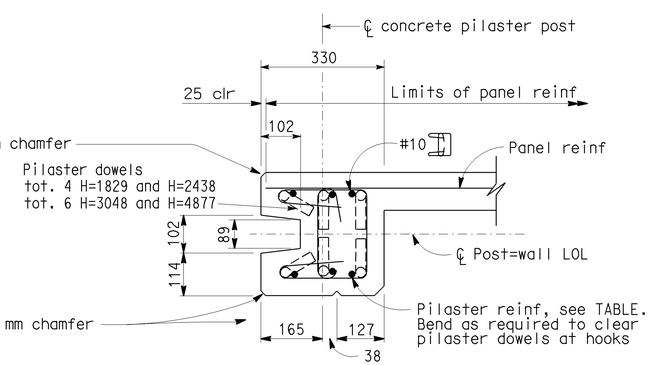

SECTION F-F

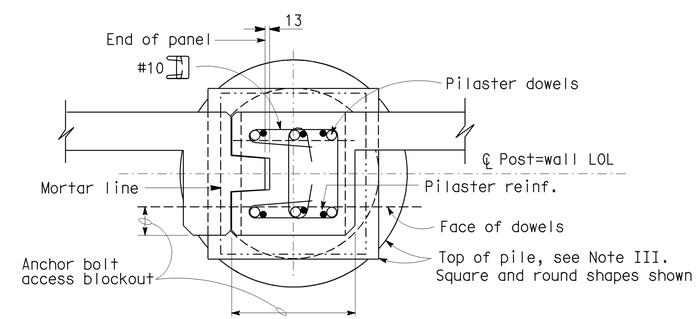

SECTION H-H

NO SCALE

ALL DIMENSIONS ARE IN MILLIMETERS UNLESS OTHERWISE SHOWN

STANDARD DRAWING				
FILE NO. xs15-330-3	DESIGN BY S. STAKE	CHECKED R.W. BISHOP	APPROVAL RECOMMENDED BY	
DRAWING DATE 10/84	DETAILS BY R. YEE	CHECKED R.W. BISHOP	DESIGN SUPERVISOR	
	SUBMITTED BY R.W. BISHOP			

STATE OF CALIFORNIA DEPARTMENT OF TRANSPORTATION

DIVISION OF STRUCTURES STRUCTURE DESIGN

BRIDGE NO.

KILOMETER POST

SOUNDWALL - OFFSET P/C CONCRETE PANEL

PANEL DETAILS NO. 2 SHEET 1 OF 2

DS OSD 2147A (METRIC) (REV. 2/25/97)

ORIGINAL SCALE IN MILLIMETERS FOR REDUCED PLANS 0 10 20 30 40 50 60 70 80 90 100

CU EA

DISREGARD PRINTS BEARING EARLIER REVISION DATES

REVISION DATES (PRELIMINARY STAGE ONLY) SHEET OF

USERNAME => jsanchez

xs15-330-3.dgn

DATE PLOTTED => 07-NOV-2003 TIME PLOTTED => 14:52