RELEASED 7-3-03

DIST.	COUNTY	ROUTE	KILOMETER POST TOTAL PROJECT	SHEET NO.	TOTAL SHEETS

REGISTERED ENGINEER - CIVIL

PLANS APPROVAL DATE

REGISTERED PROFESSIONAL ENGINEER No. Exp. CIVIL STATE OF CALIFORNIA

The State of California or its officers or agents shall not be responsible for the accuracy or completeness of electronic copies of this plan sheet.

Caltrans Metric

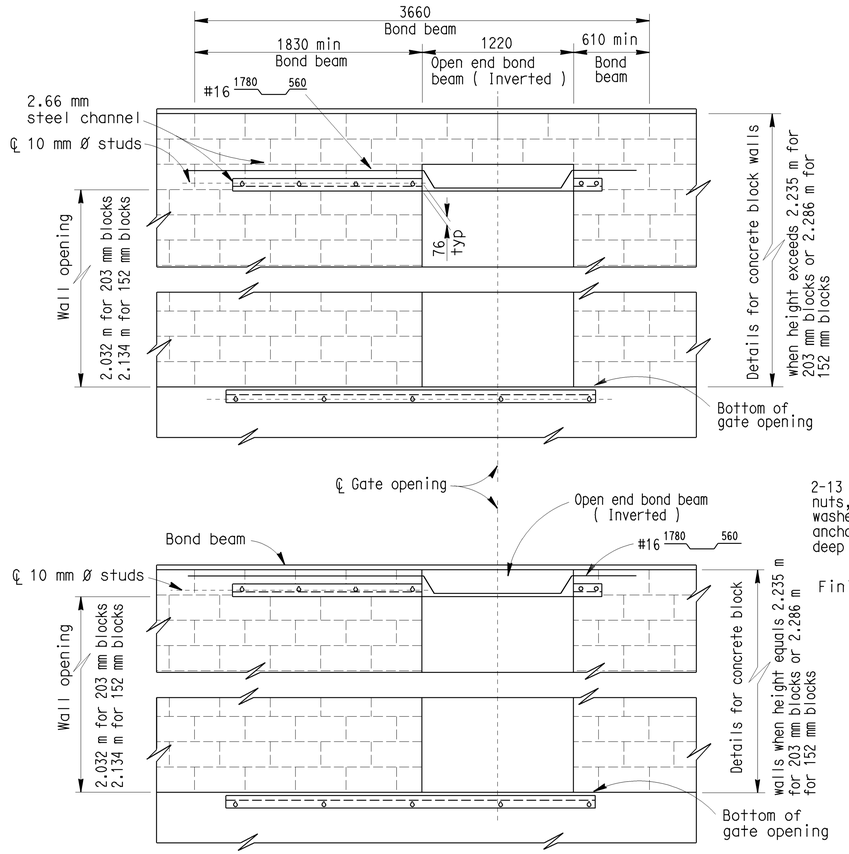

PART ELEVATION (BACK)

For details not shown, see above

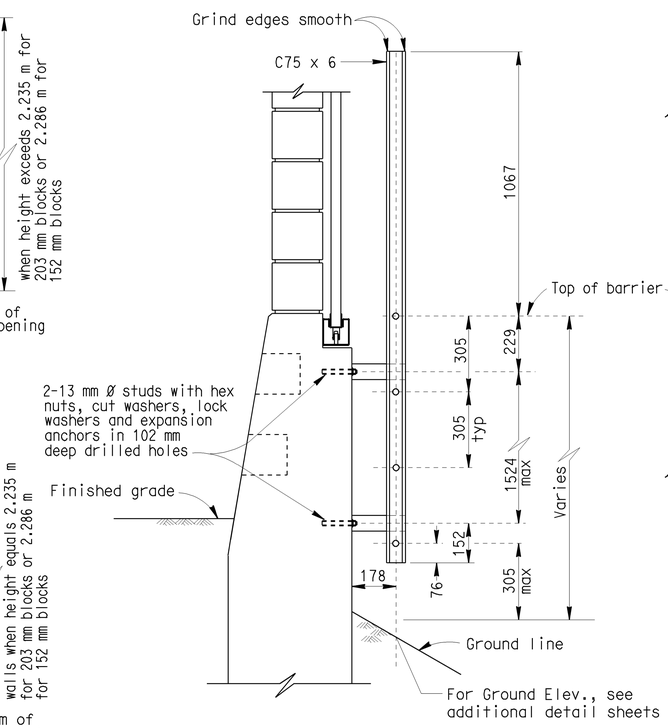

SECTION E-E

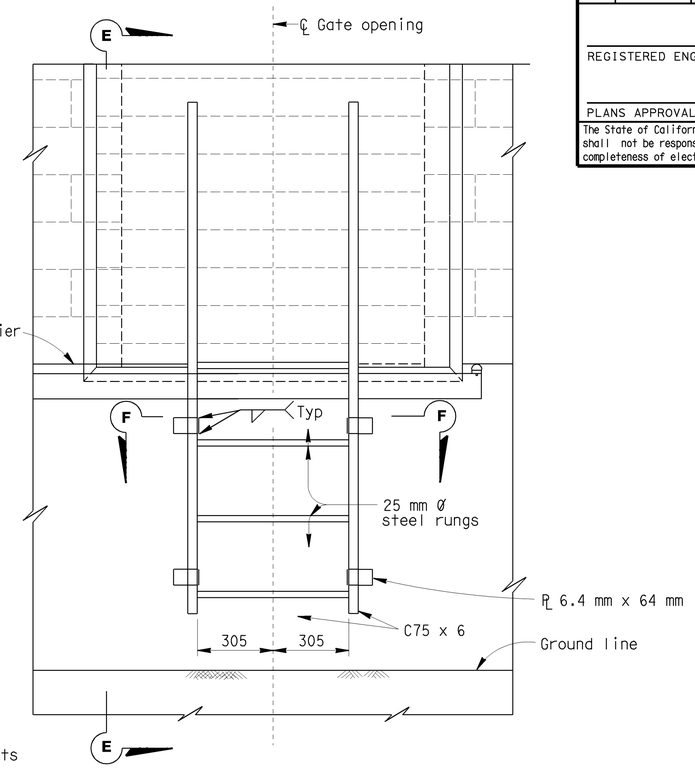

ELEVATION (BACK)

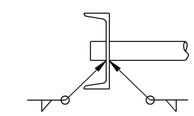

DETAIL A

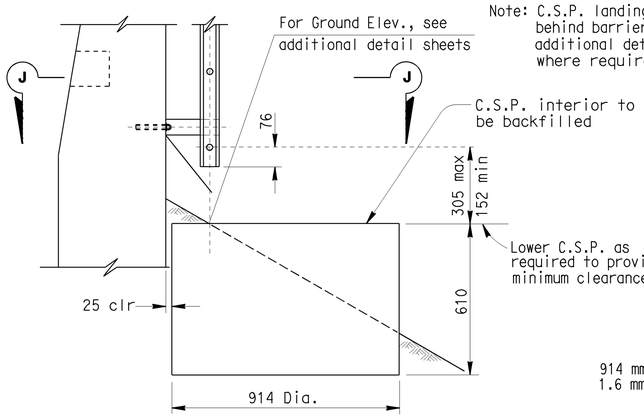

C. S. P. LANDING DETAILS

Note: C.S.P. landing required when slope of ground behind barrier is steeper than 1:8. See additional detail sheets for location where required

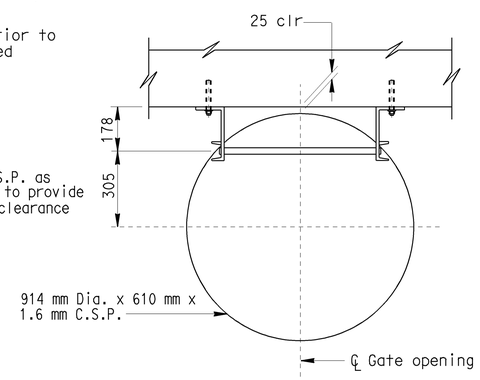

SECTION J-J

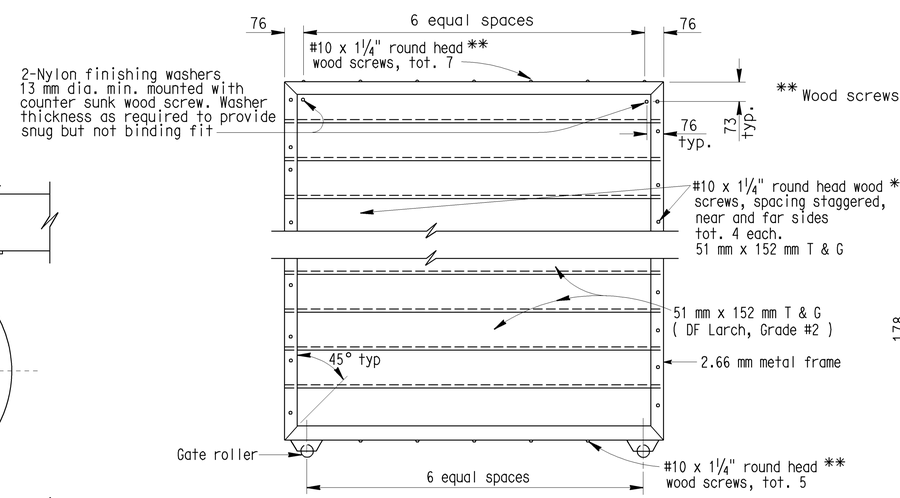

** Wood screws are in U.S. Customary Units.

ELEVATION - METAL FRAME

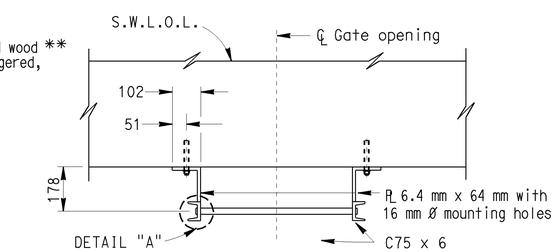

SECTION F-F

NO SCALE

ALL DIMENSIONS ARE IN MILLIMETERS UNLESS OTHERWISE SHOWN

STANDARD DRAWING				
FILE NO. xs15-230-2	DESIGN BY J. HAMAGUCHI	CHECKED D. DUNRUD	APPROVAL RECOMMENDED BY	
DRAWING DATE 5/83	DETAILS BY R. YEE	CHECKED D. DUNRUD	DESIGN SUPERVISOR	
	SUBMITTED BY D. DUNRUD			

STATE OF CALIFORNIA DEPARTMENT OF TRANSPORTATION

DIVISION OF STRUCTURES STRUCTURE DESIGN

BRIDGE NO.

KILOMETER POST

SOUNDWALL - MASONRY BLOCK ON BARRIER - 1.524 m ACCESS GATE

DETAILS NO. 2

DS OSD 2147A (METRIC) (REV. 2/25/97)

ORIGINAL SCALE IN MILLIMETERS FOR REDUCED PLANS 0 10 20 30 40 50 60 70 80 90 100

CU EA

DISREGARD PRINTS BEARING EARLIER REVISION DATES

REVISION DATES (PRELIMINARY STAGE ONLY) SHEET OF

USERNAME => jsanchez

xs15-230-2.dgn

DATE PLOTTED => 07-NOV-2003 TIME PLOTTED => 14:46