RELEASED 10-14-97

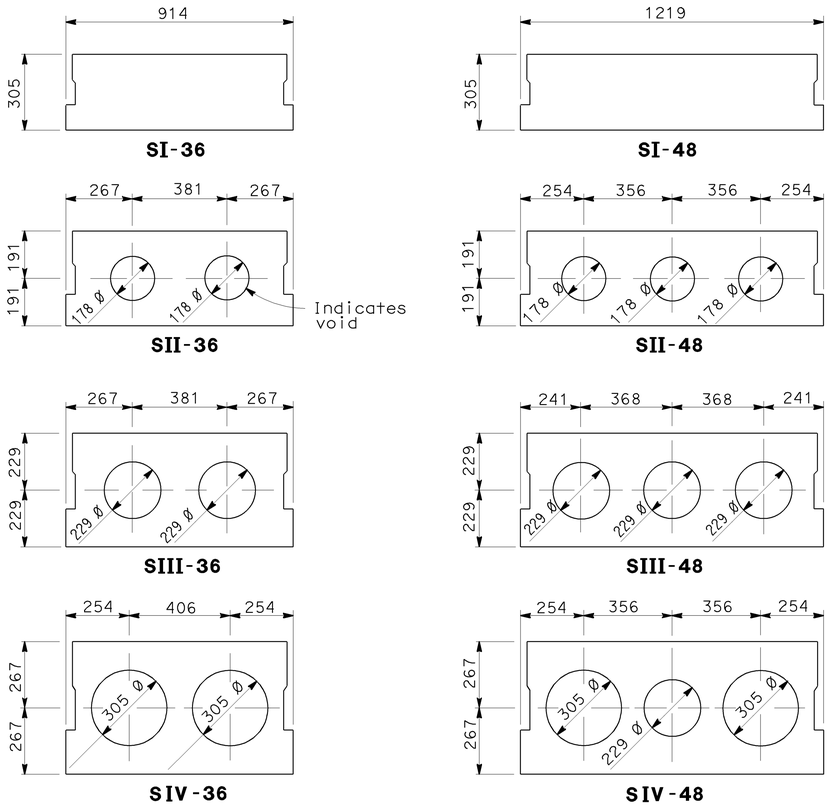

TYPICAL SECTIONS

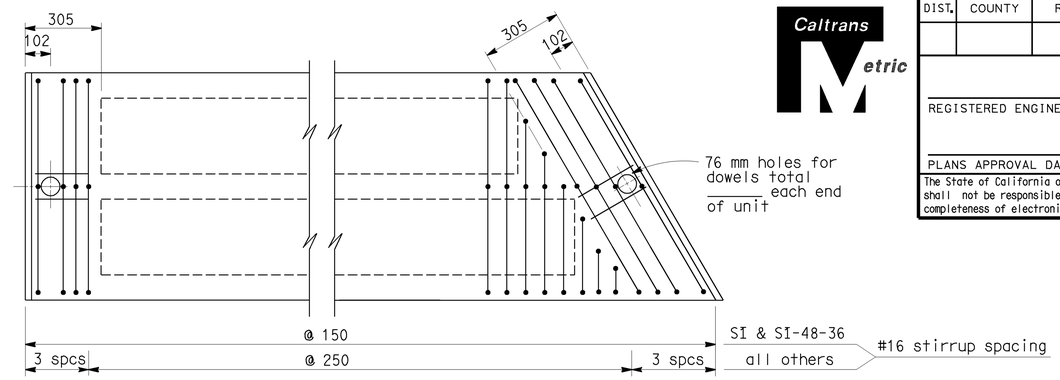

PLAN

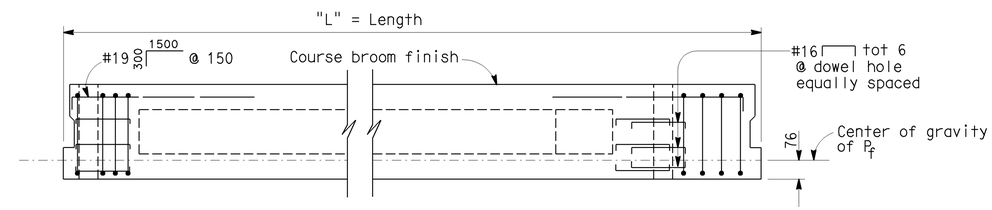

ELEVATION

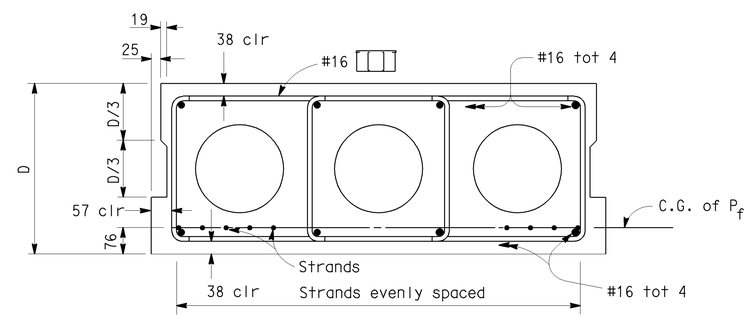

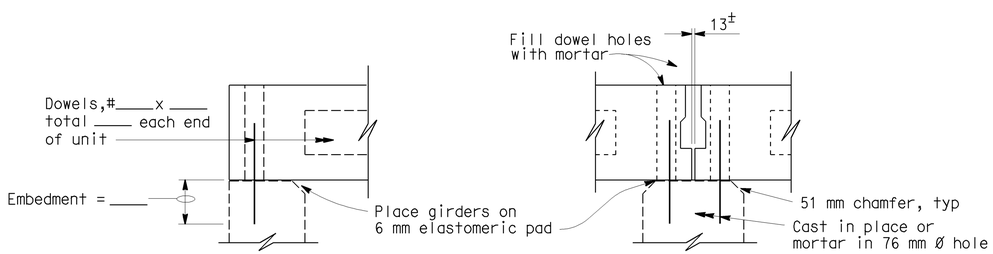

AT ABUTMENTS **AT INTERMEDIATE SUPPORTS**

SUPPORT DETAILS

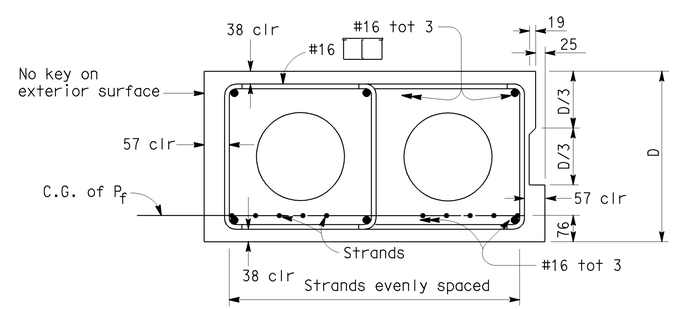

TYPICAL REINFORCEMENT

GENERAL NOTES:

1. P_f is the force required at center of span after all losses.
2. Slabs designed for pretensioning.
3. Concrete strength at time of stressing 28 MPa f'_c -28 MPa at 28 days
4. Live loading = HS 20-44,Alternative and permit design load.
5. Design 1675 N/m^2 for surfacing.
6. Keyways to be filled with mortar.
7. See other sheets for railing requirements.

LOCATION OR LENGTH	TYPICAL SECTION	P_f = WORKING FORCE IN kN	NO. OF STRANDS

NO SCALE
ALL DIMENSIONS ARE IN MILLIMETERS UNLESS OTHERWISE SHOWN

DIST.	COUNTY	ROUTE	KILOMETER POST TOTAL PROJECT	SHEET NO.	TOTAL SHEETS

Caltrans Metric

REGISTERED ENGINEER - CIVIL

PLANS APPROVAL DATE

REGISTERED PROFESSIONAL ENGINEER No. Exp. CIVIL STATE OF CALIFORNIA

The State of California or its officers or agents shall not be responsible for the accuracy or completeness of electronic copies of this plan sheet.

STANDARD DRAWING

FILE NO. xs1-110	DESIGN BY S. BOLL	CHECKED C. TAM	APPROVAL RECOMMENDED BY
DRAWING DATE 11/84	DETAILS BY R. YEE	CHECKED C. TAM	DESIGN SUPERVISOR
	SUBMITTED BY BILL JONES		

STATE OF CALIFORNIA
DEPARTMENT OF TRANSPORTATION

DIVISION OF STRUCTURES
STRUCTURE DESIGN

BRIDGE NO.
KILOMETER POST

PRESTRESSED CONCRETE SLABS

DS OSD 2147A (METRIC) (REV. 2/25/97)

ORIGINAL SCALE IN MILLIMETERS FOR REDUCED PLANS 0 10 20 30 40 50 60 70 80 90 100

CU
EA

DISREGARD PRINTS BEARING EARLIER REVISION DATES

REVISION DATES (PRELIMINARY STAGE ONLY) SHEET OF

USERNAME => slee

xs1-110.dgn

DATE PLOTTED => 06-OCT-2003 TIME PLOTTED => 10:53