| DIST | COUNTY | ROUTE | KILOMETER POST TOTAL PROJECT | SHEET NO. | TOTAL SHEETS |
|---|---|---|---|---|---|
| | | | | | |

Caltrans Metric

REGISTERED CIVIL ENGINEER

July 1999
PLANS APPROVAL DATE

REGISTERED PROFESSIONAL ENGINEER Jeffrey B. Woody No. C41260 Exp. 3-31-03 CIVIL STATE OF CALIFORNIA

*The State of California or its officers or agents shall not be responsible for the accuracy or completeness of electronic copies of this plan sheet.*

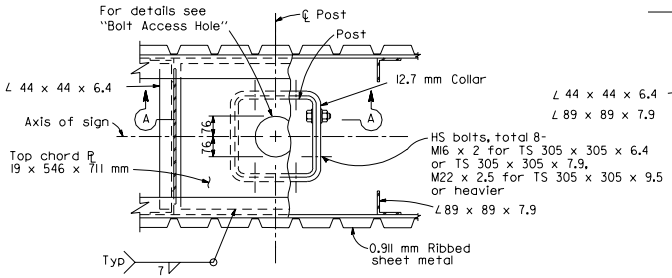


PLAN

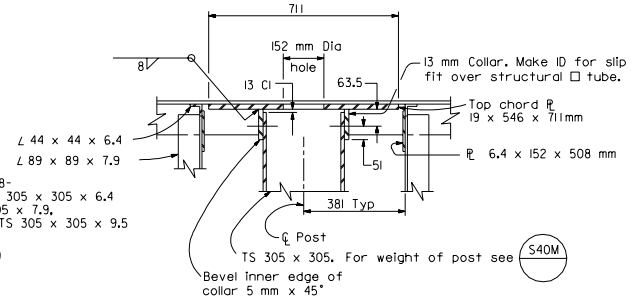


SECTION A-A

## UPPER JUNCTURE CONNECTION

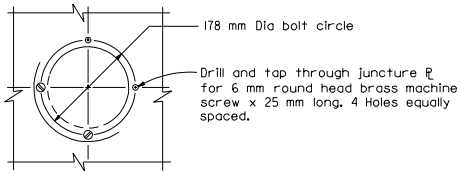


PLAN

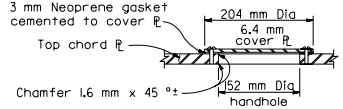


SECTION

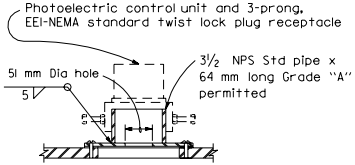


SECTION
With photoelectric control unit

## BOLT ACCESS HOLE

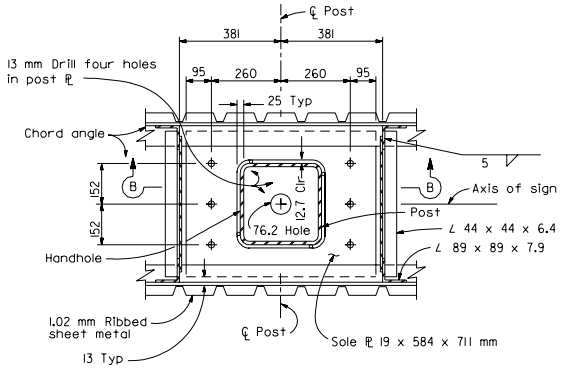


PLAN

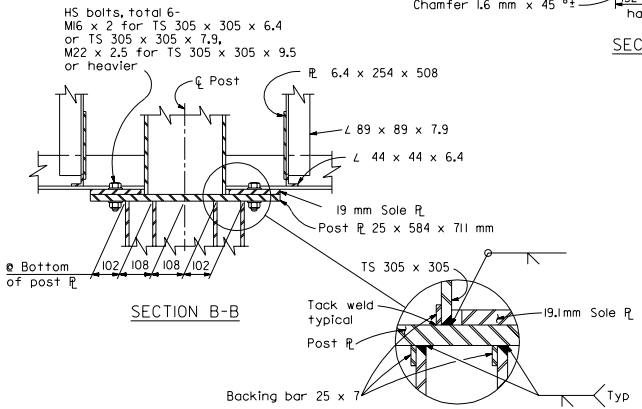


SECTION B-B

ELEVATION
Connect the overlapped ends of the rail elements with

NOTE

Lower connection plates shall be machined or straightened after welding to provide full contact between faying surfaces before bolting.

## LOWER JUNCTURE CONNECTION

STATE OF CALIFORNIA
DEPARTMENT OF TRANSPORTATION

# OVERHEAD SIGNS-BOX BEAM CLOSED TRUSS SINGLE POST BUTTERFLY FRAME JUNCTURE DETAILS

NO SCALE

ALL DIMENSIONS ARE IN MILLIMETERS UNLESS OTHERWISE SHOWN

**S40L**

**1999 STD. PLAN S40L**