DIST	COUNTY	ROUTE	KILOMETER POST TOTAL PROJECT	SHEET NO.	TOTAL SHEETS

Caltrans Metric

REGISTERED CIVIL ENGINEER

July 1999
PLANS APPROVAL DATE

REGISTERED PROFESSIONAL ENGINEER Jeffrey B. Woody No. C41260 Exp. 3-31-03 CIVIL STATE OF CALIFORNIA

The State of California or its officers or agents shall not be responsible for the accuracy or completeness of electronic copies of this plan sheet.

NOTE

Left arm length may be shorter, longer or equal to right arm length.

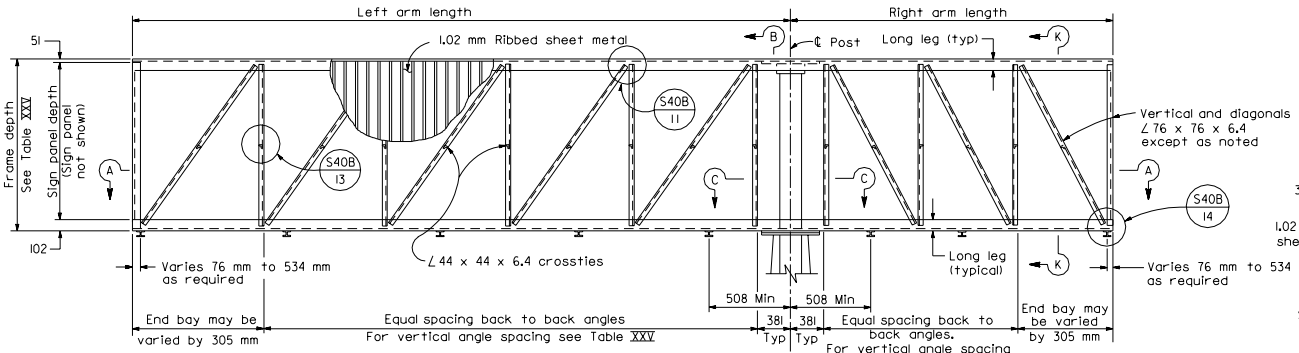

NOTE

Left arm may be shorter, longer or equal to right arm length.

ELEVATION

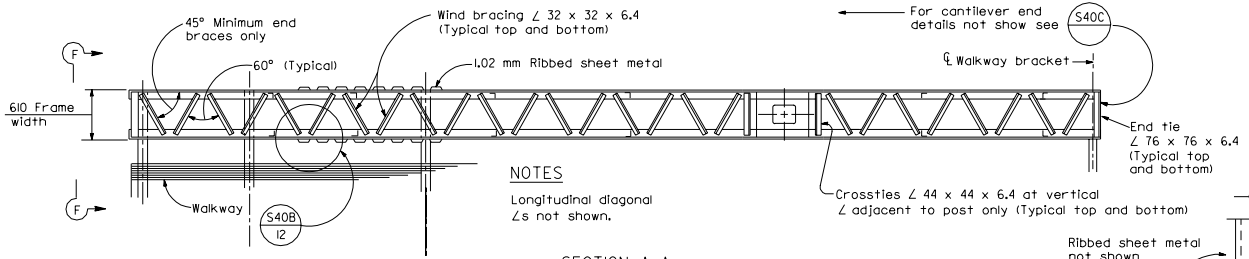

NOTES

Longitudinal diagonal ∠s not shown.

SECTION A-A

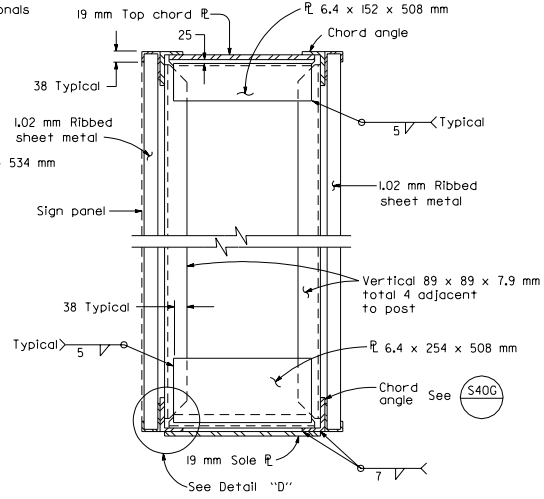

SECTION B-B

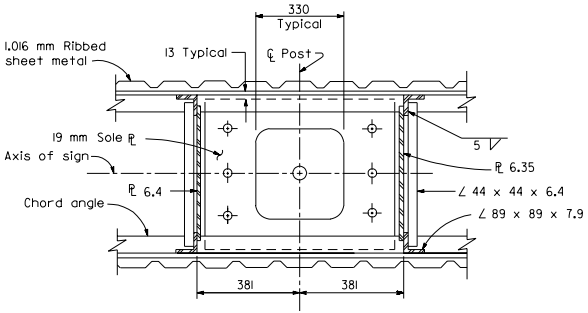

SECTION C-C

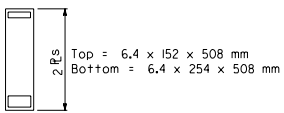

Top = 6.4 x 152 x 508 mm
Bottom = 6.4 x 254 x 508 mm

SIGN DEPTH 1778-2286

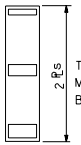

Top = 6.4 x 152 x 508 mm
Middle = 6.4 x 254 x 508 mm
Bottom = 6.4 x 254 x 508 mm

SIGN DEPTH 2540-3048

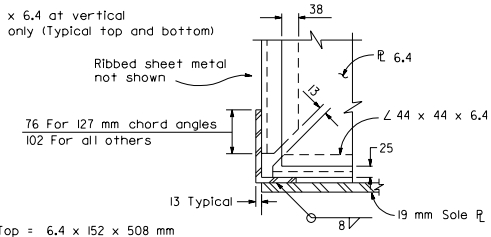

DETAIL D

TABLE XXV

Sign Planel Depth (mm)	Frame Depth (mm)	Maximum Vertical Angle Spacing (mm)	Arm Length (mm)	
1778	1931	1677	1219	No diagonals required
2032	2185	1829	1524	
2286	2439	2134	1524	
2540	2693	2134	1829	
2794	2947	2286	1829	
3048	3201	2286	1829	

NOTES

1. For Detail (11) thru (14) and Section K-K, see (S40B)
2. For View F-F at cantilever end, see (S40D)

STATE OF CALIFORNIA
DEPARTMENT OF TRANSPORTATION

OVERHEAD SIGNS-BOX BEAM CLOSED TRUSS SINGLE POST BUTTERFLY FRAME DETAILS

NO SCALE

ALL DIMENSIONS ARE IN MILLIMETERS UNLESS OTHERWISE SHOWN

S40K

1999 STD. PLAN S40K