DIST	COUNTY	ROUTE	KILOMETER POST TOTAL PROJECT	SHEET NO.	TOTAL SHEETS

Caltrans Metric

REGISTERED CIVIL ENGINEER

July 1, 1999
PLANS APPROVAL DATE

REGISTERED PROFESSIONAL ENGINEER Jeffrey B. Woody No. C41260 Exp. 3-31-03 CIVIL STATE OF CALIFORNIA

The State of California or its officers or agents shall not be responsible for the accuracy or completeness of electronic copies of this plan sheet.

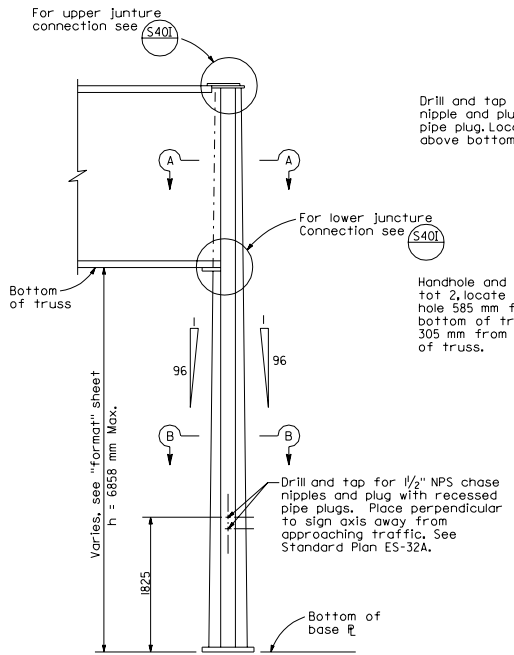

ELEVATION

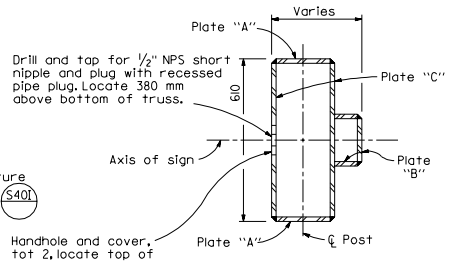

SECTION A-A

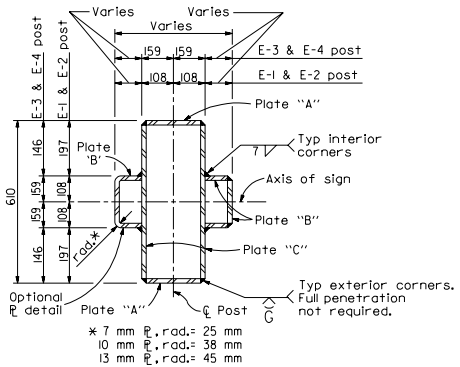

* 7 mm PL, rad.= 25 mm
10 mm PL, rad.= 38 mm
13 mm PL, rad.= 45 mm

SECTION B-B

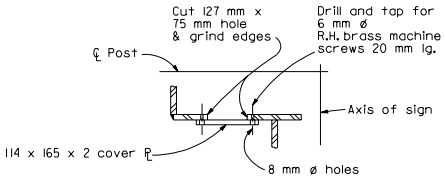

NOTE

Face handhole and cover PL away from traveled way except as shown. See "Section A-A".

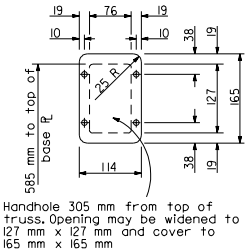

HANDHOLE AND COVER DETAIL

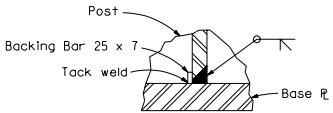

POST TO BASE PLATE WELDING DETAILS

NOTE

1. For foundation details see S39

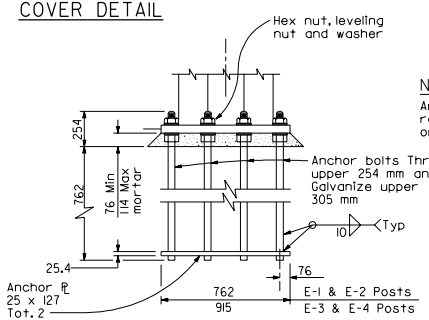

NOTE

Anchor PLs may be retained with hex nuts or formed heads.

ANCHORAGE DETAILS

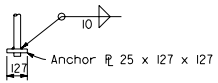

SINGLE SIDE BOLT

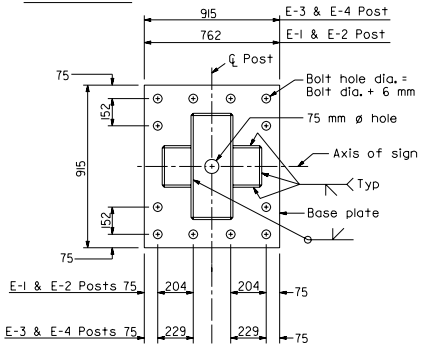

BASE PLATE

Post Type	Base Plate (mm)	Plate "A" (mm)	Plate "B" (mm)	Plate "C" (mm)	* Anchor Bolts (mm)
E-1	51x762x915	12.7	6.4	9.5	12-45 mm ø
E-2	64x762x915	25.4	9.5	12.7	12-51 mm ø
E-3	64x915x915	25.4	9.5	12.7	12-57 mm ø
E-4	64x915x915	25.4	12.7	15.9	12-57 mm ø

* 51mm ø Anchor bolts may be substituted for 45 mm ø bolts.

STATE OF CALIFORNIA
DEPARTMENT OF TRANSPORTATION

OVERHEAD SIGNS-BOX BEAM CLOSED TRUSS SINGLE POST CANTILEVER POST DETAILS

NO SCALE

ALL DIMENSIONS ARE IN MILLIMETERS UNLESS OTHERWISE SHOWN

S40J

1999 STD. PLAN S40J