DIST	COUNTY	ROUTE	KILOMETER POST TOTAL PROJECT	SHEET NO.	TOTAL SHEETS

Caltrans Metric

REGISTERED CIVIL ENGINEER

July 1, 1999
PLANS APPROVAL DATE

REGISTERED PROFESSIONAL ENGINEER Jeffrey B. Woody No. C41260 Exp. 3-31-03 CIVIL STATE OF CALIFORNIA

The State of California or its officers or agents shall not be responsible for the accuracy or completeness of electronic copies of this plan sheet.

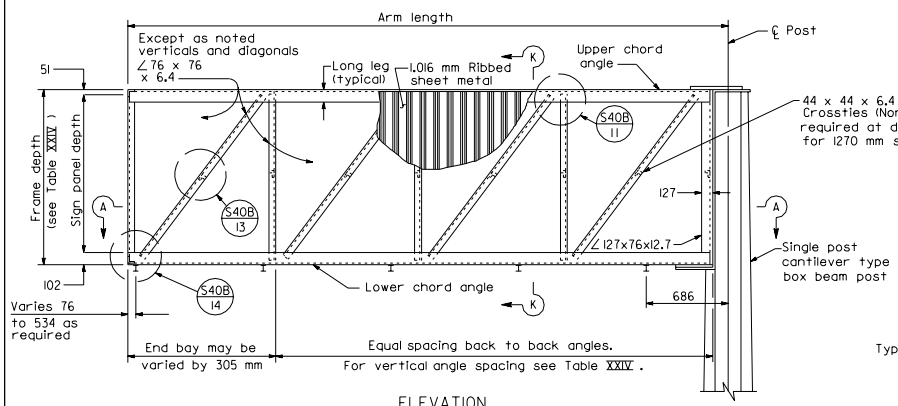

ELEVATION

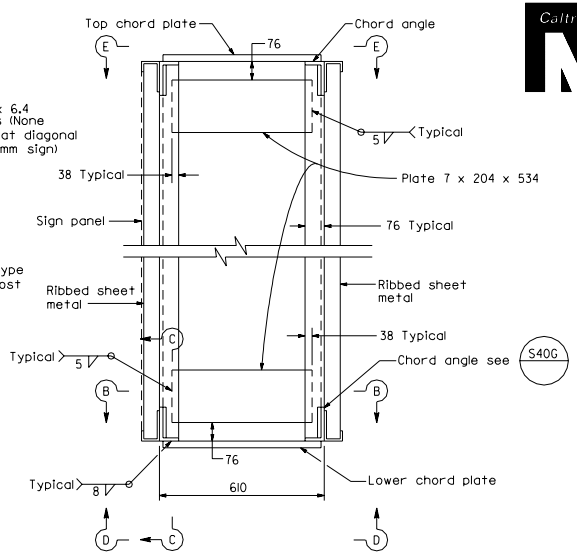

POST END VIEW

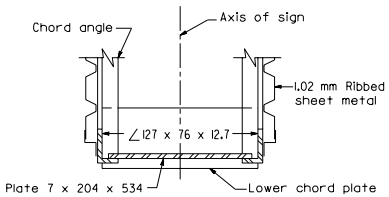

SECTION B-B

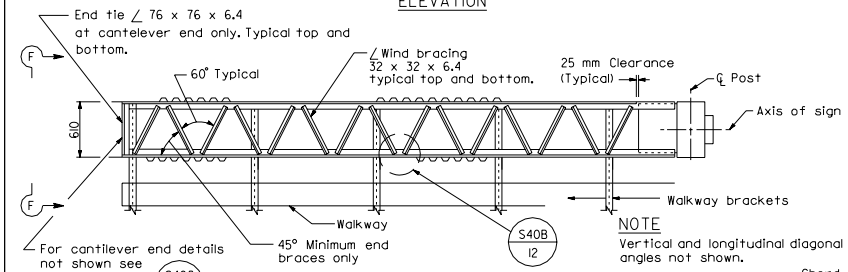

SECTION A-A

NOTE
Vertical and longitudinal diagonal angles not shown.

NOTES
1. For Section K-K see S40B
2. For View F-F at cantilever end, see S40D

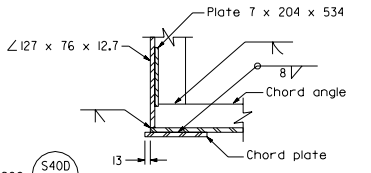

SECTION C-C

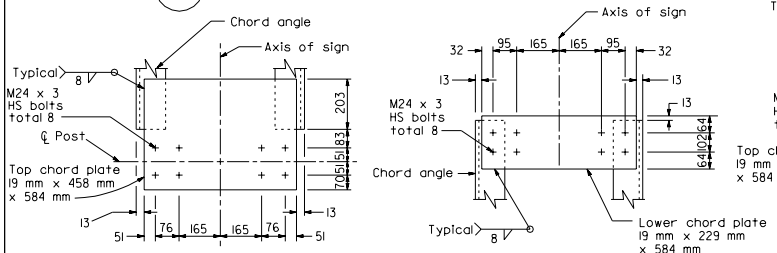

SECTION E-E

SECTION D-D

TYPE E-1 AND TYPE E-2

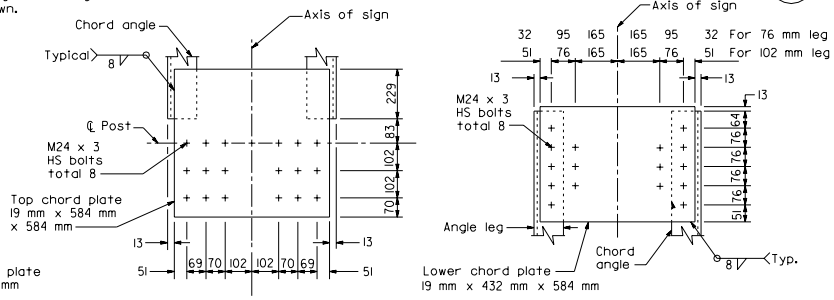

SECTION E-E

SECTION D-D

TYPE E-3 AND TYPE E-4

CHORD PLATE DETAILS

TABLE XXIV

SIGN PANEL DEPTH (mm)	FRAME DEPTH	MAXIMUM VERTICAL ANGLE SPACING (mm)
1270	1423	1372
1778	1931	1677
2032	2185	1829
2286	2439	2134
2540	2693	2134
2794	2947	2286
3048	3201	2286

STATE OF CALIFORNIA
DEPARTMENT OF TRANSPORTATION

OVERHEAD SIGNS-BOX BEAM CLOSED TRUSS SINGLE POST CANTILEVER FRAME DETAILS

NO SCALE

ALL DIMENSIONS ARE IN MILLIMETERS UNLESS OTHERWISE SHOWN

S40H

1999 STD. PLAN S40H