POST SIZE		PILE FOUNDATION				SPREAD FOOTING				
NPS	"t" (mm)	Pedestal (mm)	Pile Dia (mm)	Pile Depth (m)	Vertical Reinf	Pedestal (mm)	Footing (m)	Reinforcement Top	Reinforcement Bottom	Reinforcement L Bar
6	7.11	864 x 864	762	3.0	#19	762 x 762	1.3 x 1.9	#16	#16	#16
6	10.97	864 x 864	762	3.0	#19	762 x 762	1.3 x 2.2	#16	#16	#16
8	8.18	864 x 864	762	3.0	#19	762 x 762	1.6 x 2.5	#16	#16	#16
8	12.7	864 x 864	762	3.4	#22	762 x 762	1.9 x 2.8	#16	#16	#16
10	12.7	1016 x 1016	914	4.0	#25	914 x 914	2.2 x 3.1	#16	#25	#25
12	12.7	1016 x 1016	914	4.6	#32	914 x 914	2.2 x 3.7	#19	#25	#25
14	12.7	1016 x 1016	914	4.6	#32	914 x 914	2.2 x 4.0	#25	#29	#25
14	15.88	1016 x 1016	914	4.9	#32	914 x 914	2.5 x 4.3	#25	#29	#25

NOTES

1. Backfill shall be in place prior to erection of post.
2. Slope protection required when indicated on the plans.
3. Pile pedestal shall be formed 155 mm minimum below ground surface. Remainder to be placed against undisturbed material.

Caltrans Metric

DIST	COUNTY	ROUTE	KILOMETER POST TOTAL PROJECT	SHEET NO.	TOTAL SHEETS

REGISTERED CIVIL ENGINEER

July 1, 1999
PLANS APPROVAL DATE

REGISTERED PROFESSIONAL ENGINEER Jeffrey B. Woody No. C41260 Exp. 3-31-03 CIVIL STATE OF CALIFORNIA

The State of California or its officers or agents shall not be responsible for the accuracy or completeness of electronic copies of this plan sheet.

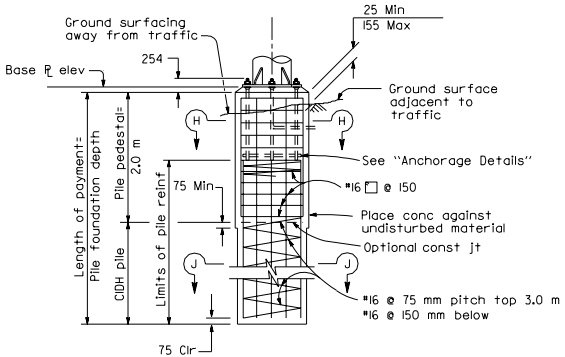

ELEVATION

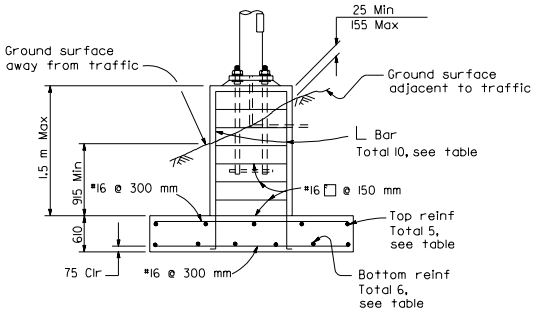

ELEVATION

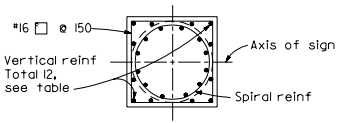

SECTION H-H

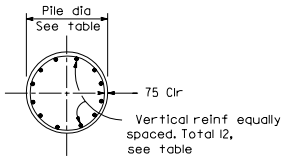

SECTION J-J

6 NPS THRU 14 NPS POSTS

PILE FOUNDATION

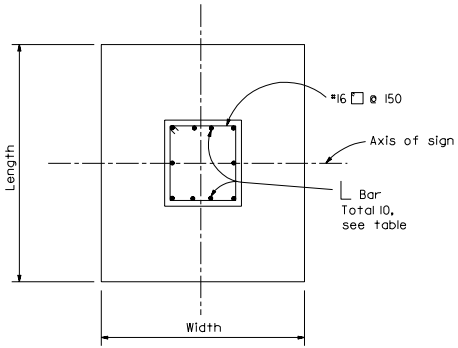

PLAN

SPREAD FOOTING

STATE OF CALIFORNIA
DEPARTMENT OF TRANSPORTATION

OVERHEAD SIGNS-LIGHTWEIGHT FOUNDATION DETAILS

NO SCALE

ALL DIMENSIONS ARE IN MILLIMETERS UNLESS OTHERWISE SHOWN

S20B

1999 STD. PLAN S20B