DIST	COUNTY	ROUTE	KILOMETER POST TOTAL PROJECT	SHEET NO.	TOTAL SHEETS

Caltrans Metric

REGISTERED CIVIL ENGINEER

July 1, 1999
PLANS APPROVAL DATE

REGISTERED PROFESSIONAL ENGINEER Jeffrey B. Woody No. C41260 Exp. 3-31-03 CIVIL STATE OF CALIFORNIA

The State of California or its officers or agents shall not be responsible for the accuracy or completeness of electronic copies of this plan sheet.

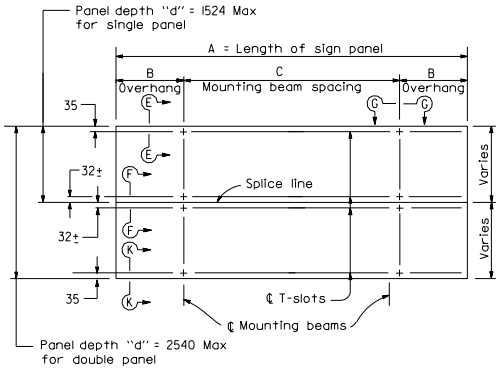

SIGN PANEL LENGTH 1524 TO 4572

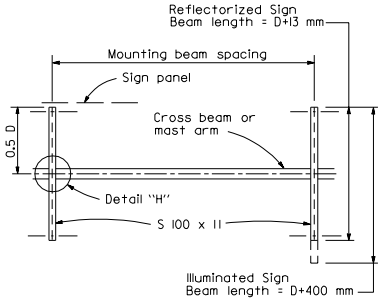

SINGLE BEAM OR ARM SERIES

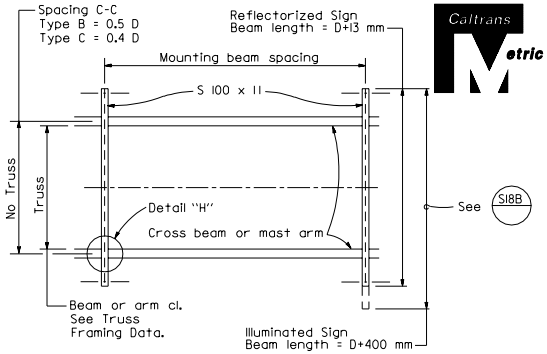

DOUBLE BEAM OR ARM SERIES

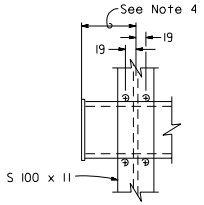

END ARM DETAIL
SINGLE POST SIGNS

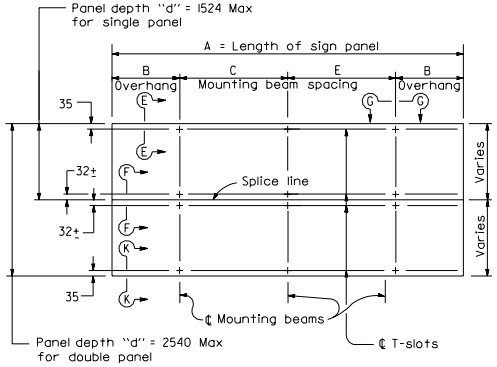

ELEVATION
SIGN PANEL LENGTH 4877 TO 7315*

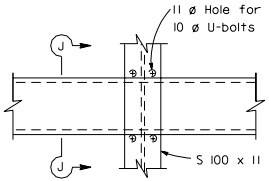

DETAIL H

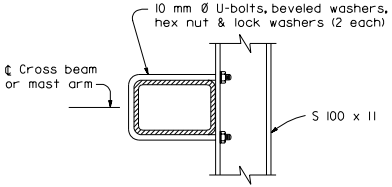

SECTION J-J

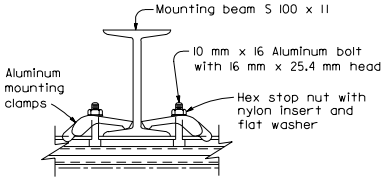

SECTION G-G

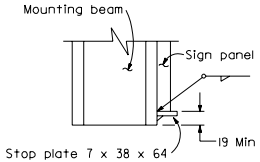

SECTION K-K

MOUNTING BEAM SPACING

Sign Panel Length *	Number Mounting Beams	Sign Panel Overhang	Mounting Beam Spacing	
A (mm)		B (mm)	C (mm)	E (mm)
1524	2	229	1066	
1829	2	305	1219	
2134	2	381	1372	
2438	2	457	1524	
2743	2	559	1625	
3048	2	610	1829	
3353	2	610	2134	
3657	2	762	2134	
3962	2	762	2438	
4267	2	762	2743	
4572	2	915	2743	
4877	3	152	2286	2286
5182	3	305	2286	2286
5486	3	305	2438	2438
5792	3	305	2591	2591
6096	3	457	2591	2591
6400	3	457	2743	2743
6706	3	610	2743	2743
7010	3	762	2743	2743
7315	3	914.5	2743	2743

* Signs longer than 7315 mm are fabricated and mounted as adjoining single panels.

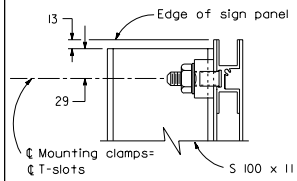

SECTION E-E

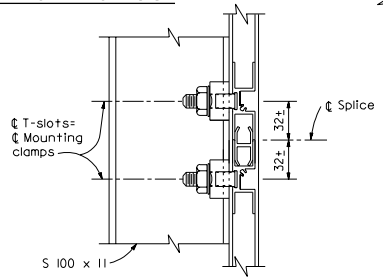

SECTION F-F

NOTES

1. Laminated panel sign depths more than 1500 mm requires additional mounting clamps located 32 mm± each side of panel splice line. Exact location is dependent on sign panel manufacturer.
2. Position sign panel so that mounting beams will clear truss connections and arm to post joints. Where interference cannot be avoided, 13 mm Ø holes to pass the 10 mm Ø U-bolts may be drilled through mast arm angles or truss connection members as necessary.
3. Torque aluminum sign panel mounting bolt to 11.6 mm/N.
4. 300 mm for Type C-1 and C-2. Others 102 mm.
5. A stop plate is required at each mounting beam under sign panel.

STATE OF CALIFORNIA
DEPARTMENT OF TRANSPORTATION

OVERHEAD SIGNS-LIGHTWEIGHT SIGN PANEL MOUNTING DETAILS LAMINATED PANEL-TYPE A

NO SCALE

ALL DIMENSIONS ARE IN MILLIMETERS UNLESS OTHERWISE SHOWN

S18A

1999 STD. PLAN S18A