DIST	COUNTY	ROUTE	KILOMETER POST TOTAL PROJECT	SHEET NO.	TOTAL SHEETS

Caltrans Metric

Jeffrey B. Woody
REGISTERED CIVIL ENGINEER

July 1, 1999
PLANS APPROVAL DATE

REGISTERED PROFESSIONAL ENGINEER
Jeffrey B. Woody
No. C41260
Exp. 3-31-03
CIVIL
STATE OF CALIFORNIA

The State of California or its officers or agents shall not be responsible for the accuracy or completeness of electronic copies of this plan sheet.

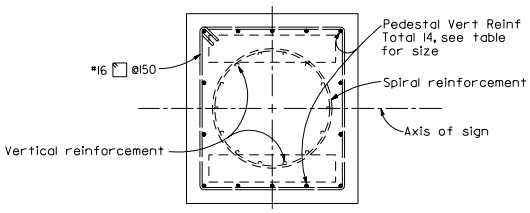

SECTION B-B

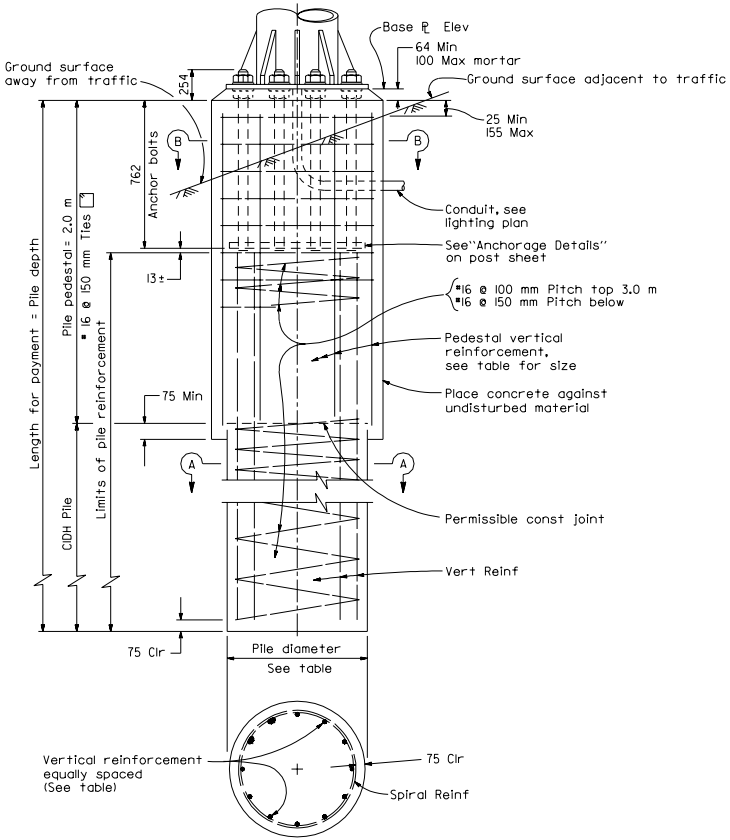

SECTION A-A

Post Type	Anchor Bolts	Pedestal Size (mm)	Reinforcing Steel Vertical	Pile Diameter (mm)	Pile Depth ** (m)
II	6-51 mm ø	890x865	14-#22	760	4.0
III	6-51 mm ø	965x865	14-#25	760	4.0
IV	6-51 mm ø	1120x1020	16-#25	920	4.0
V	10-51 mm ø	1170x1095	16-#29	920	5.0
VI	10-51 mm ø	1170x1095	16-#32	920	5.5
VII	12-51 mm ø	1295x1195	16-#36	920	6.5
I-S	6-51 mm ø	865x865	14-#22	760	4.0
II-S	6-51 mm ø	940x865	14-#25	760	5.0
III-S	6-51 mm ø	1020x865	14-#32	760	5.5
IV-S	8-51 mm ø	1070x1020	16-#32	920	6.0
V-S	8-51 mm ø	1145x1020	16-#36	920	7.0
VI-S	8-51 mm ø	1245x1020	16-#36	920	7.0
VII-S	8-57 mm ø	1350x1195	*24-#36	920	8.0

** Use Foundation Depth shown in table unless otherwise shown on the Project Plans.

* Bundled bars

NOTES

1. For anchor bolt layout see post sheet.
2. For "Base ℞ elevation" see Project Plans.
3. Pedestal and pile shall be Class "2" PCC.
4. Pedestals and base plates, longer sides shall be normal to axis of sign.
5. Prior to erection of the post, backfill which is equivalent to the surrounding material shall be in place.
6. Pedestal shall be formed 150 mm minimum below ground surface. Remainder to be placed against undisturbed material.
7. Slope protection required when indicated on the Project Plans.
8. Foundation design is based on a lateral soil pressure of 86 MPa.

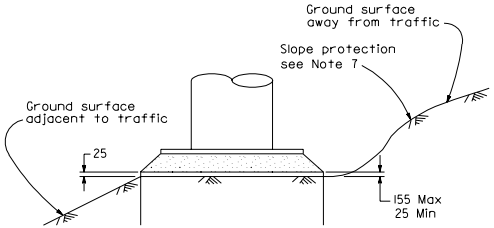

DETAIL C

STATE OF CALIFORNIA
DEPARTMENT OF TRANSPORTATION

OVERHEAD SIGNS-TRUSS PILE FOUNDATION

NO SCALE

ALL DIMENSIONS ARE IN MILLIMETERS UNLESS OTHERWISE SHOWN

S13

1999 STD. PLAN S13