DIST	COUNTY	ROUTE	KILOMETER POST TOTAL PROJECT	SHEET NO.	TOTAL SHEETS

Caltrans Metric

Jeffrey B. Woody
REGISTERED CIVIL ENGINEER

October 26, 2000
PLANS APPROVAL DATE

REGISTERED PROFESSIONAL ENGINEER Jeffrey B. Woody No. C41260 Exp. 3-31-03 CIVIL STATE OF CALIFORNIA

The State of California or its officers or agents shall not be responsible for the accuracy or completeness of electronic copies of this plan sheet.

To accompany plans dated _____

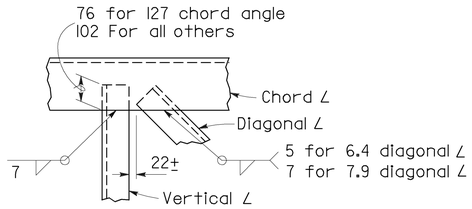

DETAIL ①

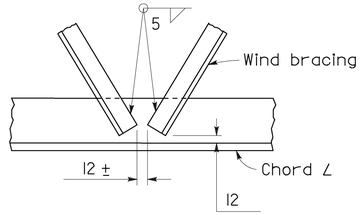

DETAIL ②

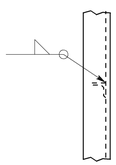

DETAIL ③

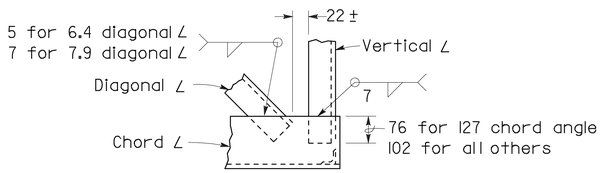

DETAIL ④

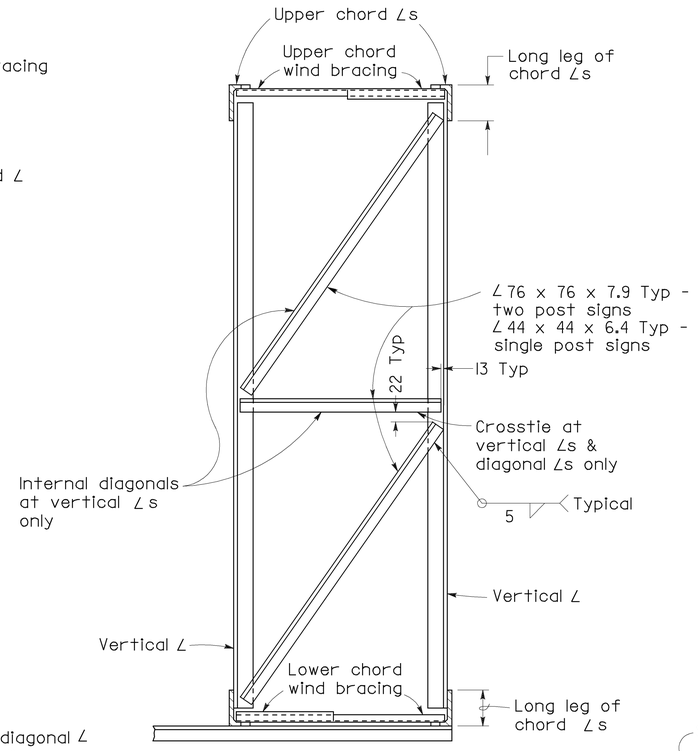

TYPICAL SECTION J-J

NOTE

Diagonal ∠s in plane of truss not shown. Bracing shown is at all vertical ∠s of truss.

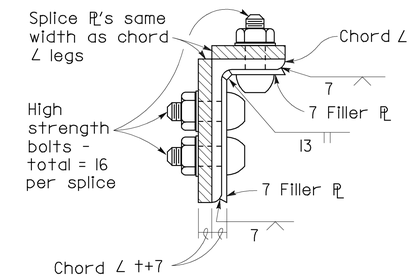

SECTION T-T

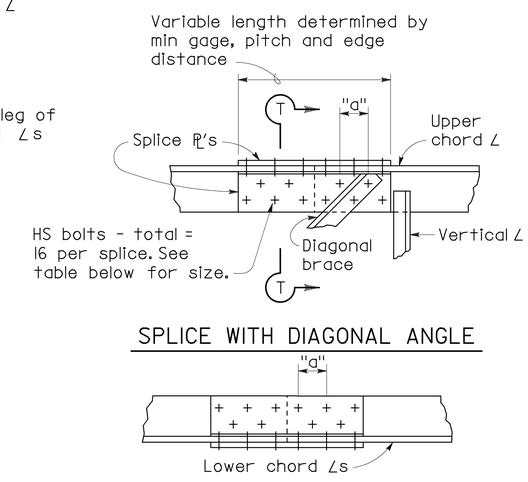

SPLICE WITH DIAGONAL ANGLE

SPLICE WITHOUT DIAGONAL ANGLE

BOLTED CHORD SPLICE

BOLTED CHORD SPLICE		
TWO POST SIGNS		
Chord ∠	Nominal Bolt Diameter	"a" mm min.
127 x 89 x 9.5	3/4" (M20 x 2.5)	64
152 x 102 x 12.7	7/8" (M22 x 2.5)	76
178 x 102 x 19.0	1" (M27 x 3)	89
203 x 102 x 19.0	1 1/8" (M27 x 3)	89
203 x 102 x 19.0	1 1/4" (M30 x 3.5)	96
203 x 102 x 19.0	1 1/4" (M30 x 3.5)	96
SINGLE POST SIGNS		
Chord ∠	Nominal Bolt Diameter	"a" mm min.
127 x 76 x 7.9	3/4" (M20 x 2.5)	64
127 x 76 x 12.7	3/4" (M20 x 2.5)	64

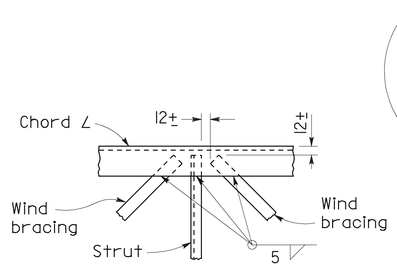

DETAIL ⑤

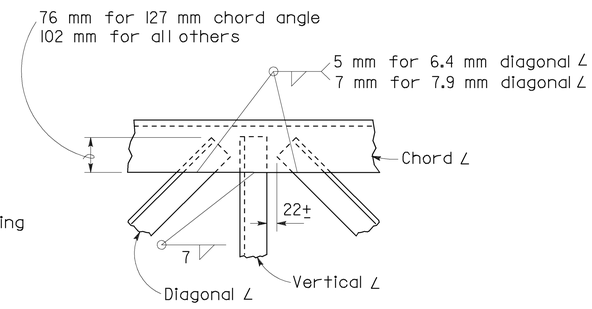

DETAIL ⑥

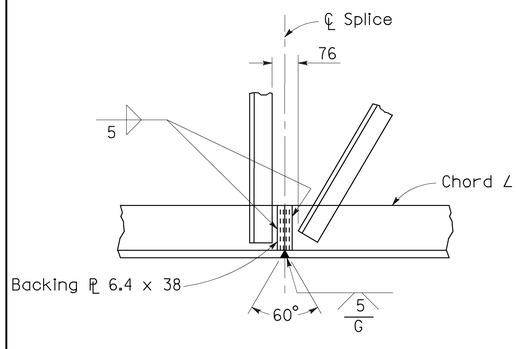

WELDED CHORD SPLICE

SPLICE NOTES

Location of Splices:

The splice shall be located so as not to interfere with mounting the walkway brackets or the clip angles for the removeable sign panel frame. The wind bracing in the area of the bolted chord splice shall be bolted to the chord angles with a 10 Ø HS bolt, nut, 2 cut washers and lock washer.

Filler PL:

The plates welded to the angle legs on the inside shall be welded before punching the bolt holes. They shall be the same length as the cover plates. The plates are not necessary on the single post signs if the splice is located over 1/3 of the cantilever length from the post. Alternative splice details may be used if approved by the Engineer.

STATE OF CALIFORNIA
DEPARTMENT OF TRANSPORTATION

OVERHEAD SIGNS-TRUSS STRUCTURAL FRAME DETAILS

NO SCALE

ALL DIMENSIONS ARE IN MILLIMETERS UNLESS OTHERWISE SHOWN

RSP S6 DATED OCTOBER 26, 2000 SUPERSEDES STANDARD PLAN S6 DATED JULY 1, 1999-PAGE 223 OF THE STANDARD PLANS BOOK DATED JULY 1999.

REVISED STANDARD PLAN RSP S6

1999 REVISED STD. PLAN RSP S6