DIST	COUNTY	ROUTE	KILOMETER POST TOTAL PROJECT	SHEET NO.	TOTAL SHEETS

Caltrans Metric

Jeffrey B. Woody
REGISTERED CIVIL ENGINEER

October 26, 2000
PLANS APPROVAL DATE

REGISTERED PROFESSIONAL ENGINEER Jeffrey B. Woody No. C41260 Exp. 3-31-03 CIVIL STATE OF CALIFORNIA

The State of California or its officers or agents shall not be responsible for the accuracy or completeness of electronic copies of this plan sheet.

To accompany plans dated _____

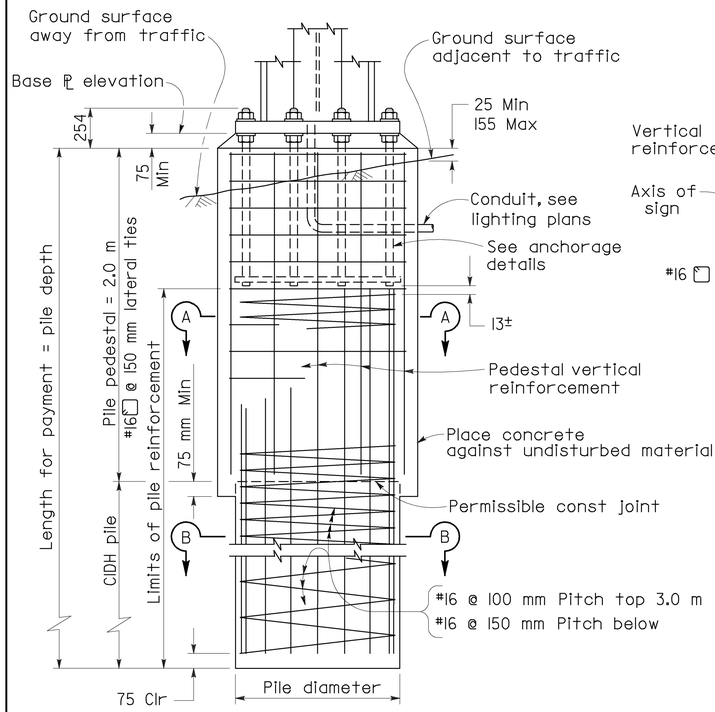

ELEVATION

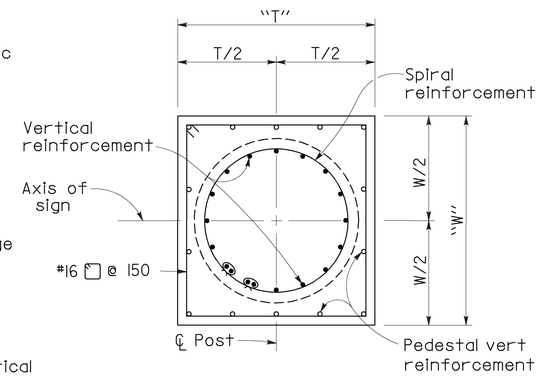

SECTION A-A

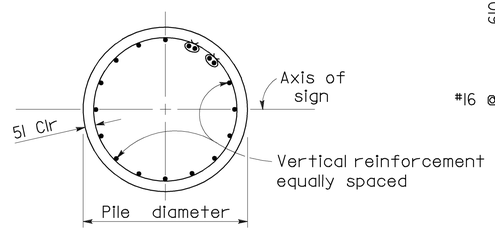

SECTION B-B

PILE FOUNDATION

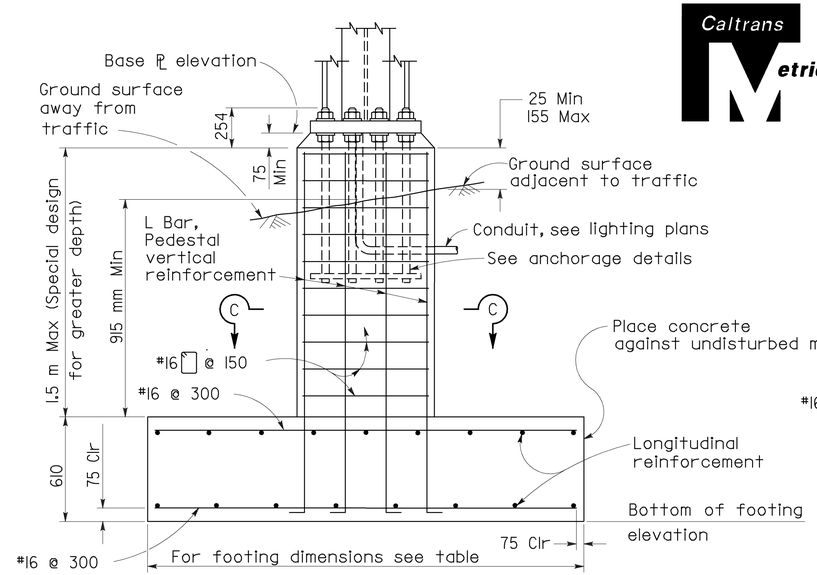

ELEVATION

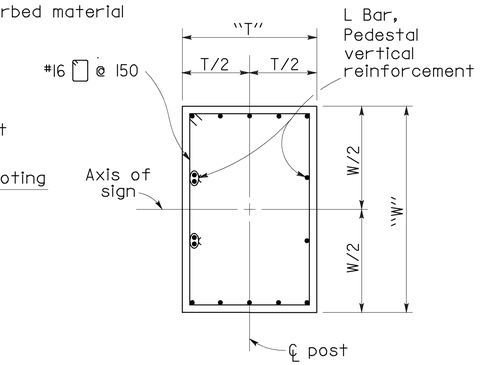

SECTION C-C

SPREAD FOOTING

TWO POST TYPE

Post Type	Pedestal Size "T" x "W" (m) x (m)	Pile Foundation: Vertical Reinf	Pile Dia (mm)	Pile Depth (m)	Pedestal Vert Reinf	Spread Footing: Footing Dimension (m)	Top Reinf Longit	Top Reinf Transv	Bottom Reinf Longit	Bottom Reinf Transv
A-1	1050 x 1250	16-#25	920	4.3	14-#22	2.2 x 4.9	7-#16	#16 @ 300	6-#29	#16 @ 300
A-2		16-#29		4.9	14-#25	2.5 x 5.2	10-#16		10-#29	
A-3		16-#36		6.1	14-#29	2.5 x 5.5	8-#19		9-#36	
A-4		*24-#36		6.4	14-#29	2.5 x 6.1	8-#25		11-#36	
A-5		*24-#36		6.4	14-#32	2.5 x 6.1	8-#25		11-#36	
B-1	1.05 x 1.35	*16-#36		6.1	14-#25	2.5 x 5.5	8-#19		9-#36	
B-2	1.05 x 1.35	*24-#36		6.7	14-#29	2.5 x 6.1	10-#19		11-#36	
B-3	1.05 x 1.40	*28-#36		7.4	14-#32	2.5 x 6.4	7-#25		13-#36	
B-4	1.20 x 1.40	*24-#36	1070	6.7	14-#32	2.5 x 6.7	7-#25		14-#36	
B-5	1.20 x 1.40	*24-#36	1070	7.0	14-#32	2.5 x 7.1	8-#25		15-#36	
C-1	1.05 x 1.05	16-#29	920	4.9	14-#22	2.2 x 4.9	6-#19		7-#36	
C-2	1.05 x 1.15	16-#36		5.8	14-#29	2.5 x 5.2	8-#19		9-#36	
C-3	1.05 x 1.15	*24-#36		6.4	14-#32	2.5 x 5.8	9-#19		11-#36	
C-4	1.05 x 1.15	*28-#36		7.4	14-#32	2.5 x 6.4	7-#25		13-#36	
C-5	1.20 x 1.20	*24-#36	1070	6.7	14-#36	2.5 x 6.7	8-#25		15-#36	
C-6		*24-#36		7.1	14-#36	2.5 x 7.1	8-#25		16-#36	
C-7		*28-#36		7.4	14-#36	2.5 x 7.1	8-#25		12-#43	
C-8		*34-#36		7.7	*28-#32	2.5 x 7.4	9-#25		13-#43	
D-1	1.05 x 1.25	*24-#36	920	6.4	14-#29	2.5 x 5.8	9-#19		10-#36	
D-2	1.05 x 1.30	*28-#36	920	7.4	14-#32	2.5 x 6.4	7-#25		13-#36	
D-3	1.20 x 1.30	*24-#36	1070	7.4	14-#36	2.5 x 7.1	8-#25		16-#36	
D-4		*34-#36		8.3	14-#36	2.5 x 7.1	8-#25		18-#36	
D-5		*34-#36		9.2	*28-#32	2.5 x 7.7	9-#25		14-#43	
D-6	1.30 x 1.40	*34-#36		9.2	14-#36	2.5 x 8.0	10-#25		14-#43	
D-7		*34-#36		9.2	14-#36	2.5 x 8.0	10-#25	#16 @ 300	15-#43	#16 @ 300

* Bundled bars

SINGLE POST TYPE

Post Type	Pedestal Size "T" x "W" (m) x (m)	Pile Foundation: Vertical Reinf	Pile Dia (mm)	Foundation Depth (m)	Pedestal Vert Reinf	Spread Footing: Footing Dimension (m)	Top Reinf Longit	Top Reinf Transv	Bottom Reinf Longit	Bottom Reinf Transv
E-1	1.02 x 1.12	16-#25	920	4.0	14-#25	2.5x 4.3	6-#16	#16 @ 300	9-#22	#16 @ 300
E-2	1.02 x 1.12	16-#29		4.6	14-#29	2.8 x 4.6	6-#19		9-#29	
E-3	1.12 x 1.12	16-#32		5.5	14-#32					
E-4	1.12 x 1.12	16-#36		6.1	14-#36					
F-1	1.02 x 1.12	16-#25		4.0	14-#22	2.5 x 4.0	8-#16	#16 @ 300	10-#22	#16 @ 300
F-2		16-#29		4.6	14-#22	2.5 x 4.6	8-#16		11-#25	
F-3		16-#29		4.9	14-#25	2.5 x 4.9	9-#16		10-#29	
F-4		16-#36		5.8	14-#29	2.5 x 5.8	6-#19		10-#36	
F-5		16-#36		6.7	14-#32	2.5 x 6.1	10-#19	#16 @ 300	12-#36	#16 @ 300

NOTES

1. Base plates, pedestals and footings; longer sides shall be normal to axis of sign.
2. For anchor bolt layout see Standard Plans S40F and S40J.
3. For base plate elevation see Format sheet.
4. Prior to erection of the post, backfill which is equivalent to the surrounding material shall be in place.
5. Pile pedestal shall be formed 155 mm minimum below ground surface. Remainder to be placed against undisturbed material.
6. Pile footing - use foundation depth shown in table unless otherwise shown on Format sheet.
7. On single post sign structures the post shall be raked out of plumb with the use of the levelling nuts to make the bottom of the sign frame level.

STATE OF CALIFORNIA
DEPARTMENT OF TRANSPORTATION

OVERHEAD SIGNS-BOX BEAM CLOSED TRUSS FOUNDATION DETAILS

NO SCALE

ALL DIMENSIONS ARE IN MILLIMETERS UNLESS OTHERWISE SHOWN

RSP S39 DATED OCTOBER 26, 2000 SUPERSEDES STANDARD PLAN S39 DATED JULY 1, 1999-PAGE 242 OF THE STANDARD PLANS BOOK DATED JULY 1999.

REVISED STANDARD PLAN RSP S39

1999 REVISED STD. PLAN RSP S39