DIST	COUNTY	ROUTE	KILOMETER POST TOTAL PROJECT	SHEET NO.	TOTAL SHEETS

Caltrans Metric

Jeffrey B. Woody
REGISTERED CIVIL ENGINEER

October 26, 2000
PLANS APPROVAL DATE

REGISTERED PROFESSIONAL ENGINEER Jeffrey B. Woody No. C41260 Exp. 3-31-03 CIVIL STATE OF CALIFORNIA

The State of California or its officers or agents shall not be responsible for the accuracy or completeness of electronic copies of this plan sheet.

To accompany plans dated _____

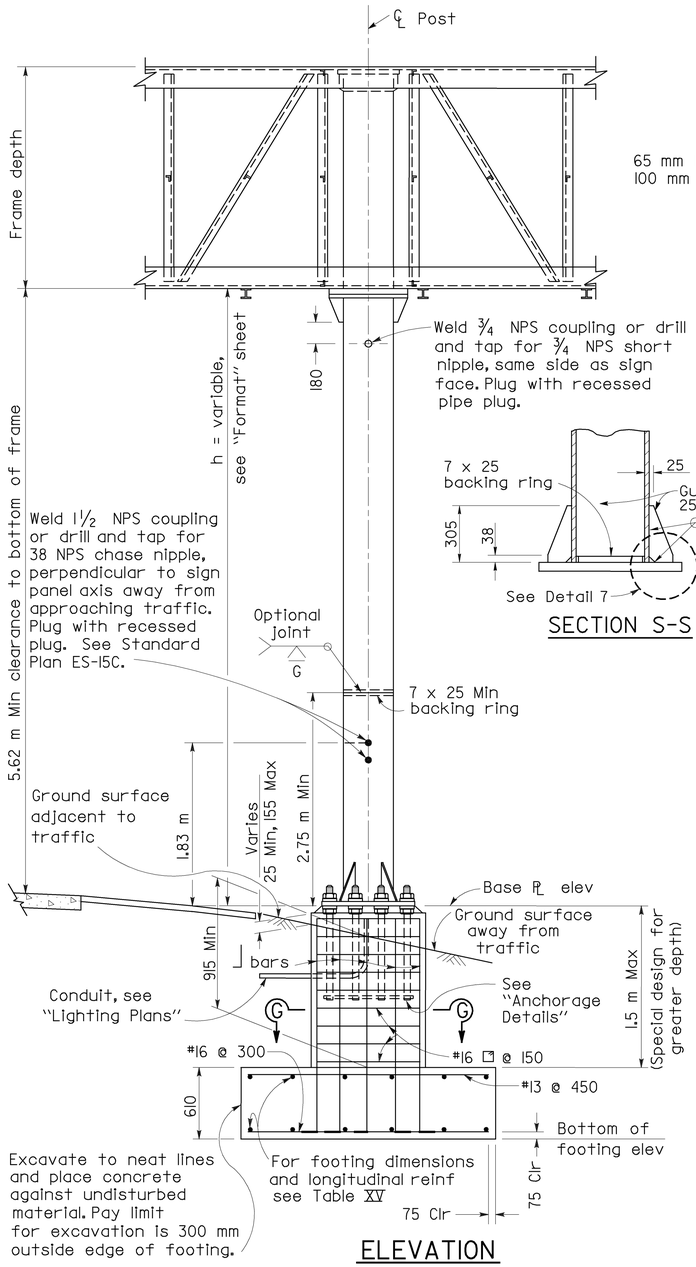

ELEVATION

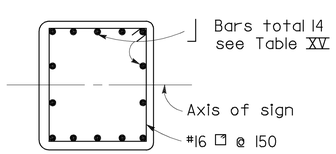

SECTION G-G

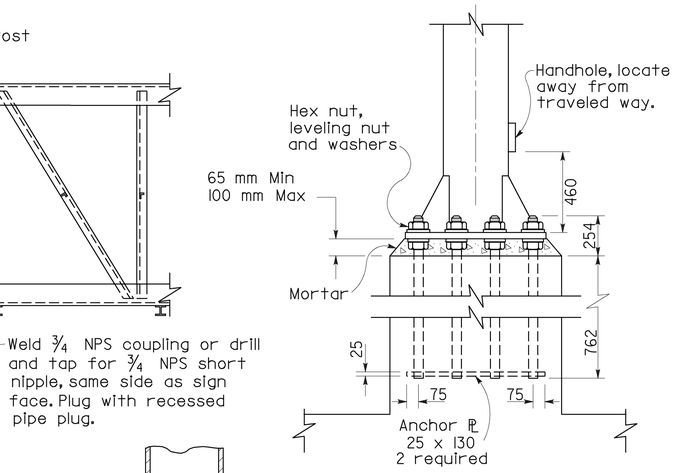

ANCHORAGE DETAILS

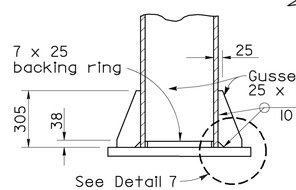

SECTION S-S

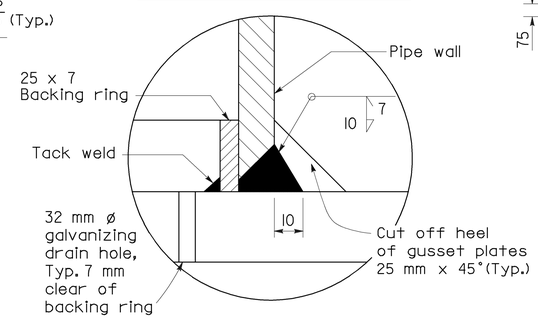

THRU POST @ BASE ℙ (NO COVER ℙ)

DETAIL 7

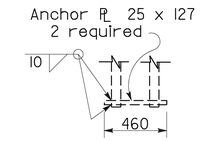

DOUBLE SIDE BOLT

TYPE VII

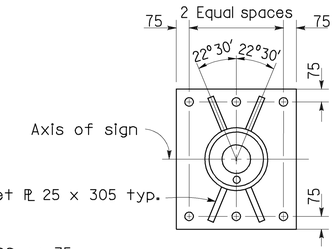

TYPE II III & IV

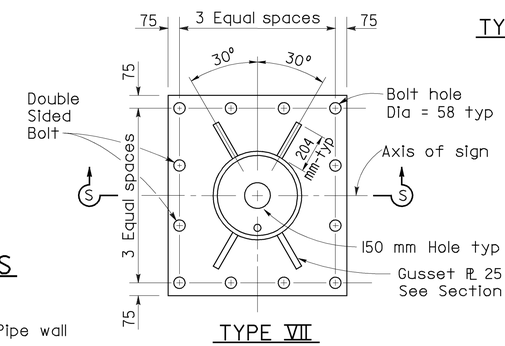

TYPE VII

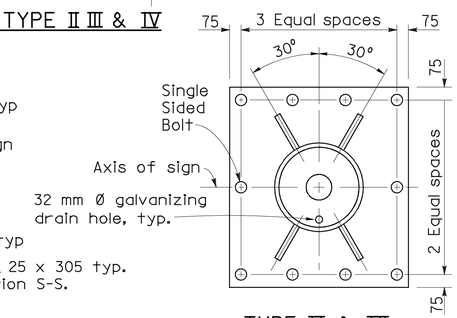

TYPE V & VI

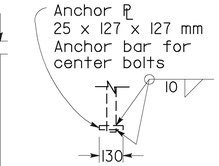

SINGLE SIDE BOLT

TYPE V & VI

TYPICAL BASE PLATES

TABLE XV

Post Type	Pipe Size NPS	Pipe Size "t" (mm)	Cap Plate Size (mm)	Base Plate Size (Note #2) (mm)	51 mm Ø Anchor Bolts	Pedestal Size (Note #2) (mm)	Footing Size (Note #2) (m)	Longitudinal Footing Reinforcement Top	Longitudinal Footing Reinforcement Bottom	⌋ Bars
II	12	9.53	483 x 483 x 22	712 x 635 x 51	6	890 x 815	2.2 x 3.1	6-#13 bars	9-#16 bars	#16
III	14	12.7	508 x 508 x 22	788 x 686 x 51	6	965 x 865	2.5 x 3.7	6-#16 bars	8-#22 bars	#19
IV	16	12.7	560 x 560 x 22	940 x 840 x 51	6	1120 x 1020	2.5 x 4.3	6-#16 bars	9-#25 bars	#19
V	18	12.7	610 x 610 x 22	991 x 915 x 51	10	1170 x 1095	2.8 x 4.6	6-#16 bars	9-#29 bars	#22
VI	20	12.7	660 x 660 x 25	991 x 915 x 51	10	1170 x 1095	2.8 x 4.9	6-#19 bars	8-#32 bars	#25
VII	24	12.7	762 x 762 x 25	1093 x 991 x 51	12	1295 x 1195	3.1 x 5.2	7-#19 bars	10-#32 bars	#32

NOTES

1. For "General Notes" see Standard Plan S1.
2. Longer sides of base plates, pedestals and footing shall be normal to axis of sign.
3. Backfill shall be in place prior to erection of post.
4. Thread upper 203 mm of anchor bolts and galvanize upper 305 mm.
5. Spread footing shown, use Pile Foundation when shown on the Project Plans.
6. Anchor plates may be retained with hexagon nut or formed head as alternatives to details shown.
7. On single post sign structures, the post shall be raked out of plumb, with the use of the leveling nuts to make the bottom of the sign frame level.
8. At final position of post all top and bottom nuts shall be tightened against base plate.
9. When foundation is located on a steep slope with exposed face of concrete adjacent to traffic, see "Detail C" on Standard Plan S13.
10. Slope protection required when indicated on the Project Plans.

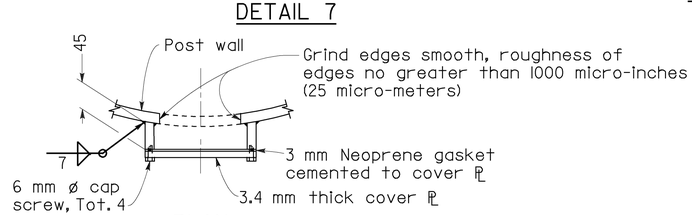

PLAN

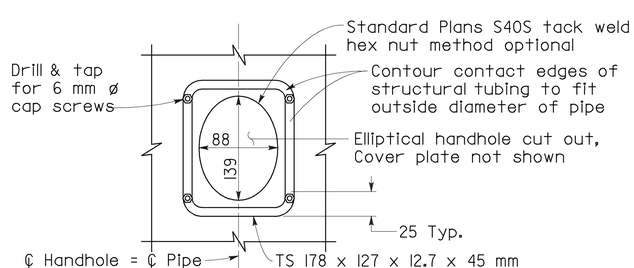

ELEVATION

TYPICAL DETAILS OF HANDHOLE AND COVER

STATE OF CALIFORNIA
DEPARTMENT OF TRANSPORTATION

OVERHEAD SIGNS-TRUSS SINGLE POST TYPE POST TYPES II THROUGH VII

NO SCALE

ALL DIMENSIONS ARE IN MILLIMETERS UNLESS OTHERWISE SHOWN

RSP S2 DATED OCTOBER 26, 2000 SUPERSEDES STANDARD PLAN S2 DATED JULY 1, 1999-PAGE 219 OF THE STANDARD PLANS BOOK DATED JULY 1999.

REVISED STANDARD PLAN RSP S2

1999 REVISED STD. PLAN RSP S2