DIST	COUNTY	ROUTE	KILOMETER POST TOTAL PROJECT	SHEET NO.	TOTAL SHEETS

Caltrans Metric

REGISTERED CIVIL ENGINEER

October 26, 2000
PLANS APPROVAL DATE

REGISTERED PROFESSIONAL ENGINEER Jeffrey B. Woody No. C41260 Exp. 3-31-03 CIVIL STATE OF CALIFORNIA

The State of California or its officers or agents shall not be responsible for the accuracy or completeness of electronic copies of this plan sheet.

To accompany plans dated _____

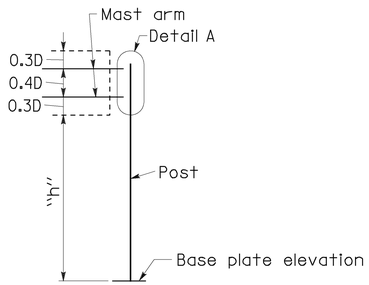

DOUBLE MASS ARM SERIES
TYPE C-1

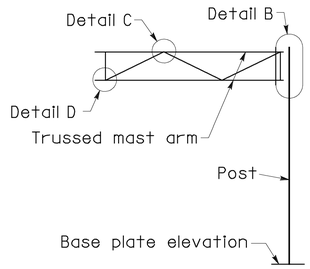

TRUSSED MASS ARM SERIES
TYPE C-2

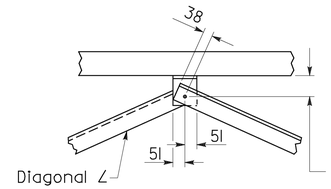

DETAIL C

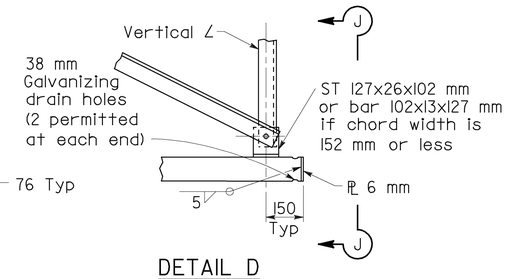

DETAIL D

POST ANGLES			
POST SIZE	ANGLE (mm)	X (mm)	WELD (mm)
6	∠127x76x12.7	44	7
8	∠152x102x15.9	57	7
10	∠178x102x15.9	57	7
12	∠203x102x19.0	57	8
14	∠203x102x19.0	57	8

POST TO ARM FRAMING DATA

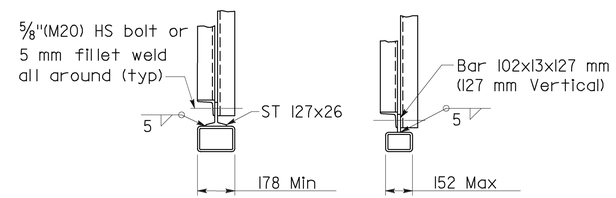

SECTION J-J

MAST ARM PLATE			
TWO ARMS	TRUSSED ARMS	PLATE (mm)	H.S. BOLT
TS 76x76x6.4		19	1/2" (M16)
TS 102x102x6.4		25.4	5/8" (M16)
TS 127x127x6.4		25.4	3/4" (M20)
TS 152x152x6.4		25.4	3/4" (M20)
TS 178x178x6.4	TS 127x76x9.5	32	3/4" (M20)
	TS 152x102x9.5	32	7/8" (M22)
	TS 178x127x9.5	32	7/8" (M22)
	TS 203x152x9.5	32	7/8" (M22)
	TS 254x152x9.5	32	1" (M27)

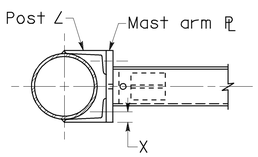

SECTION G-G

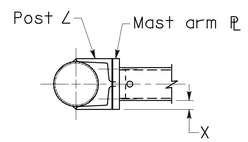

SECTION F-F

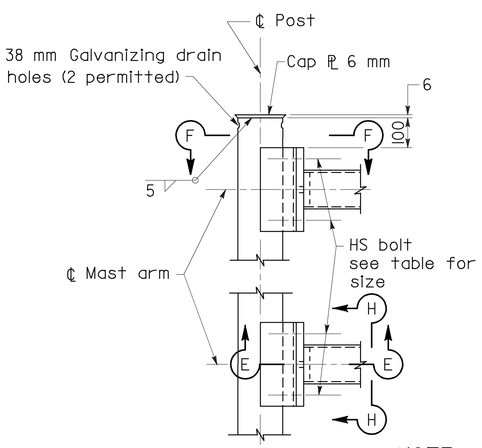

DETAIL A

NOTE

"T" equals vertical dimension of mast arm.

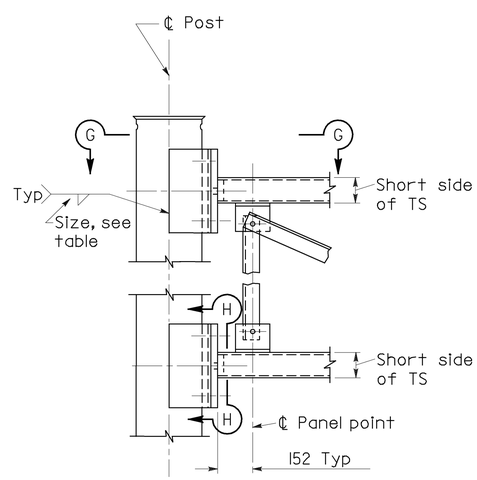

DETAIL B

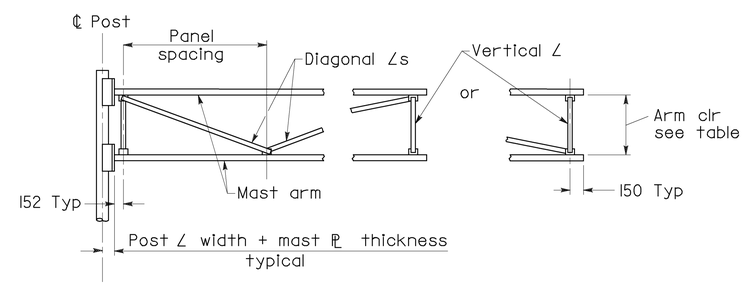

TRUSS FRAMING DATA

SIGN DEPTH (mm)	ARM CLEARANCE (mm)	MAX PANEL SPACING (mm)	VERTICAL ANGLE (mm)	DIAGONAL ANGLE (mm)
D=1016-1778	610	1321	51x51x6.4	51x51x6.4
D=2032-2540	914	1981	89x64x6.4*	89x64x6.4*

*Short leg outstanding

NOTES

For post connection to base PL see S20A

For mast arm length and mast-arm-to sign panel connections see S18A

See other plan sheets for:

1. Sign type and location.
2. Panel type and location on structure.
3. Post size and dimension "h".
4. Mast arm size.
5. Foundation type.
6. Illumination if required.

For General Notes see S20A

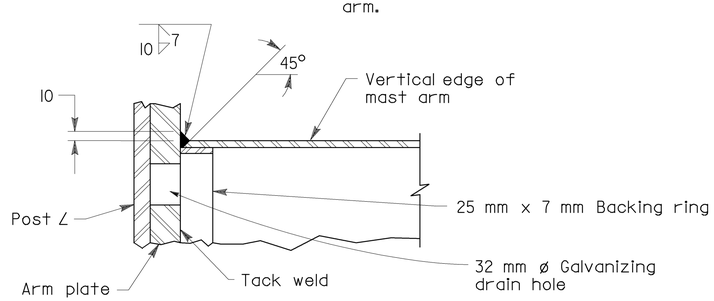

SECTION E-E

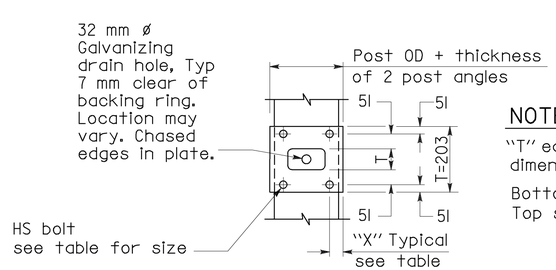

SECTION H-H

NOTE

"T" equals vertical dimension of mast arm.

Bottom connection shown. Top similar.

STATE OF CALIFORNIA
DEPARTMENT OF TRANSPORTATION

OVERHEAD SIGNS-LIGHTWEIGHT TYPE C CONNECTION DETAILS

NO SCALE

ALL DIMENSIONS ARE IN MILLIMETERS UNLESS OTHERWISE SHOWN

RSP S17 DATED OCTOBER 26, 2000 SUPERSEDES STANDARD PLAN S17 DATED JULY 1, 1999-PAGE 237 OF THE STANDARD PLANS BOOK DATED JULY 1999.

REVISED STANDARD PLAN RSP S17

1999 REVISED STD. PLAN RSP S17