DIST	COUNTY	ROUTE	KILOMETER POST TOTAL PROJECT	SHEET NO.	TOTAL SHEETS

Caltrans Metric

To accompany plans dated _____

Jeffrey B. Woody
REGISTERED CIVIL ENGINEER

October 26, 2000
PLANS APPROVAL DATE

REGISTERED PROFESSIONAL ENGINEER Jeffrey B. Woody No. C41260 Exp. 3-31-03 CIVIL STATE OF CALIFORNIA

The State of California or its officers or agents shall not be responsible for the accuracy or completeness of electronic copies of this plan sheet.

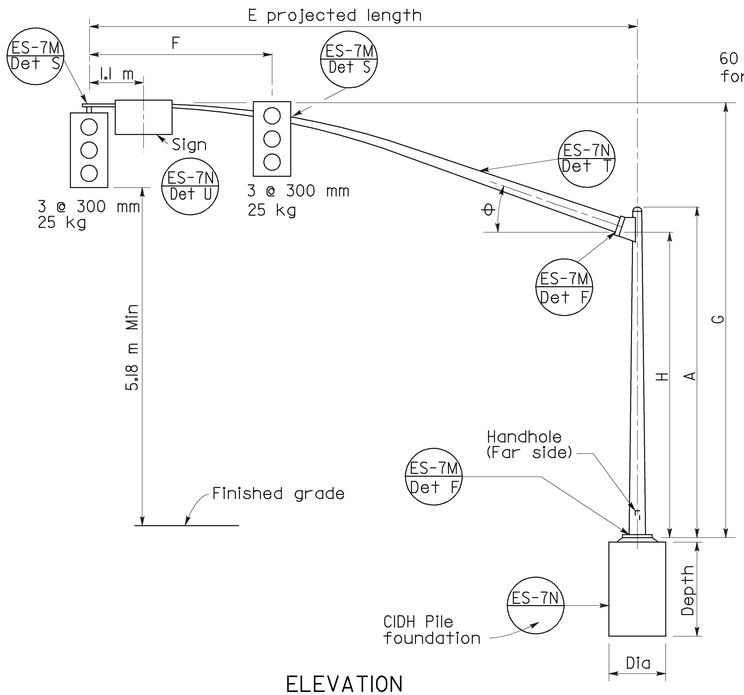

ELEVATION

TYPE 18-3-129, 23-3-129, 27-3-129

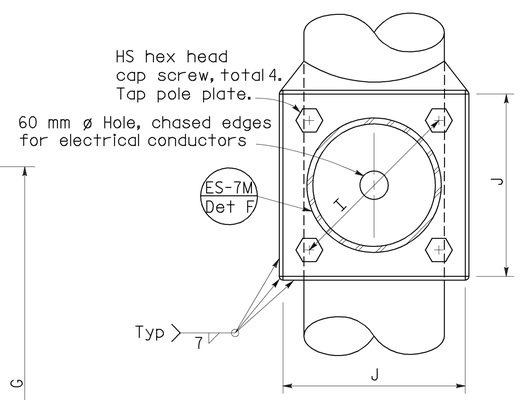

SECTION A-A

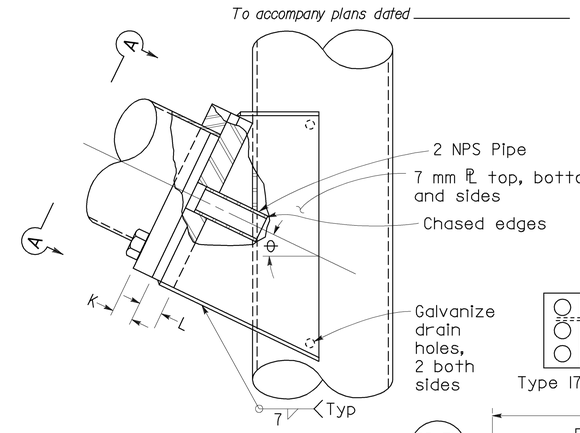

ELEVATION

SIGNAL ARM CONNECTION DETAILS

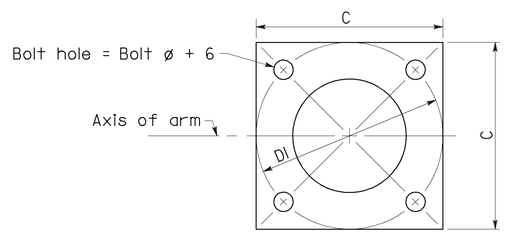

BASE PLATE

HIGH STRENGTH CAP SCREWS

16 - 11NC - 45

Length (mm)
Threads (per inch)
Size (mm)

Type 17-3-129

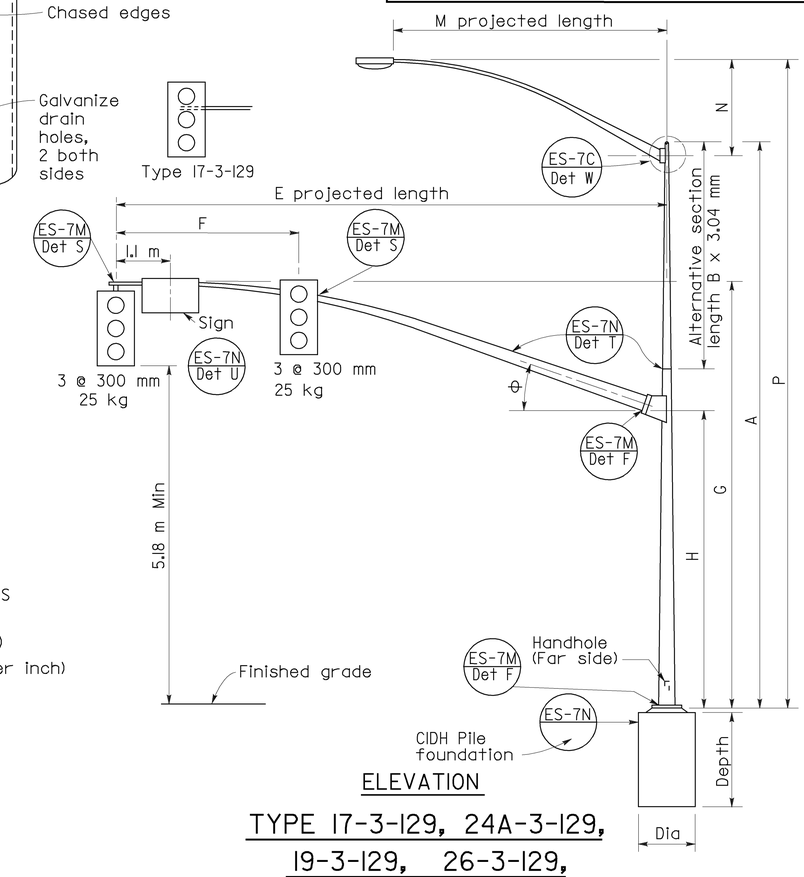

ELEVATION

TYPE 17-3-129, 24A-3-129, 19-3-129, 26-3-129, 19A-3-129, 26A-3-129, 24-3-129

Minimum yield of sheet steel is 331 MPa

SIGNAL ARM DATA											
E Projected Length	F Min Spacing	G Mounting Height	H	Min OD At Pole	Thickness	I Bolt Circle	HS Cap Screws	J Plate Size	K Arm PL Thickness	L Pole PL Thickness	θ
(m)				(mm)							
4.6	2.5	6.8 ±	4.9	168	4.55	305	32-7NC-76	305	32	38	23°
6.1		6.6 ±									
7.6	3.7	6.9 ±		186	6.07						
9.1		7.0 ±		203							
10.7	4.3			222		330		330	38	45	21°
12.2	4.6			238							15°
13.7		7.2 ±		256							

LUMINAIRE ARM DATA					
M Projected Length	N Rise	Min OD at Pole	Thickness	P Mounting Height 9.1 Pole	P Mounting Height 10.7 Pole
(m)	(mm)			(m)	
1.8	610 ±	83	3.04	9.6 ±	11.1 ±
2.4	760 ±	89		9.8 ±	11.3 ±
3.1	990 ±	98		10.0 ±	11.5 ±
3.7	1290 ±			10.3 ±	11.8 ±
4.6	1450 ±	108		10.5 ±	12.0 ±

Pole Type	Load Case	Wind Velocity km/h	POLE DATA: A Height	Min OD Base	Min OD Top	Thickness	Alternative Section B Length	Alternative Section Bottom	Alternative Section Top	BASE PLATE DATA: C	DI Bolt Circle	Thickness	Anchor Bolts Size	Luminaire Arm	Signal Arm	CIDH PILE FOUNDATION: Diameter	Depth	Reinforced
			(m)	(mm)			(m)	(mm)		(mm)				(m)		(mm)	(m)	
17-3-129	3	129	9.1	273	168	4.55	3.1	203	203	457	445	38	51øx1067x152	1.8-4.6 [3.7]	6.1	914	2.7	Yes
18-3-129			5.2		214	6.07	None							None				
19-3-129			9.1		168		3.1	203	203					1.8-4.6 [3.7]	7.6 or [9.1]			
19A-3-129			10.7		151		4.6		151					1.8-4.6 [4.6]				
23-3-129			5.2	305	229		None							None	10.7			
24-3-129			9.1		203		3.1	238	184					1.8-4.6 [3.7]				
24A-3-129			10.7		186		4.6		168					1.8-4.6 [4.6]				
26-3-129			9.1	308	203	7.94	3.1		203					1.8-4.6 [3.7]	12.2 or [13.7]			
26A-3-129			10.7		186		4.6		186					1.8-4.6 [4.6]				
27-3-129			5.2		248		None							None				

[ ] Indicates arm length to be used unless otherwise noted on plans.

STATE OF CALIFORNIA
DEPARTMENT OF TRANSPORTATION

SIGNAL AND LIGHTING STANDARDS
CASE 3 ARM LOADING
WIND VELOCITY=129 km/h
ARM LENGTHS 4.6 m TO 13.7 m

NO SCALE

ALL DIMENSIONS ARE IN MILLIMETERS UNLESS OTHERWISE SHOWN

RSP ES-7E DATED OCTOBER 26, 2000 SUPERSEDES STANDARD PLAN ES-7E DATED JULY 1, 1999-PAGE 304 OF THE STANDARD PLANS BOOK DATED JULY 1999.

REVISED STANDARD PLAN RSP ES-7E

1999 REVISED STD. PLAN RSP ES-7E