DIST	COUNTY	ROUTE	KILOMETER POST TOTAL PROJECT	SHEET NO.	TOTAL SHEETS

Caltrans Metric

Jeffrey B. Woody
REGISTERED CIVIL ENGINEER

October 26, 2000
PLANS APPROVAL DATE

REGISTERED PROFESSIONAL ENGINEER
Jeffrey B. Woody
No. C41260
Exp. 3-31-03
CIVIL
STATE OF CALIFORNIA

The State of California or its officers or agents shall not be responsible for the accuracy or completeness of electronic copies of this plan sheet.

To accompany plans dated _____

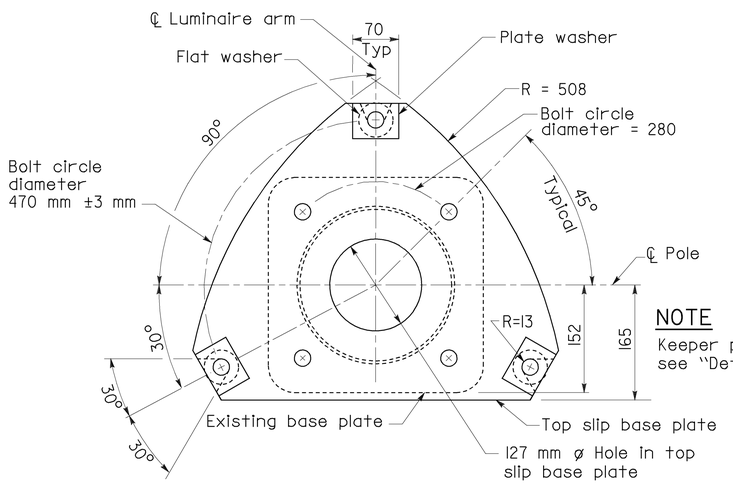

PLAN - TOP PLATES

NOTE

Keeper plate not shown see "Detail D"

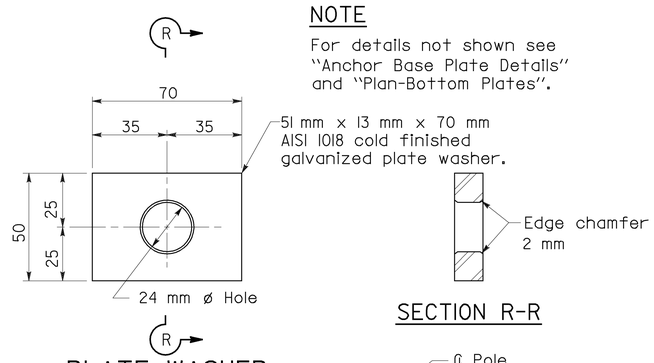

PLATE WASHER

SECTION R-R

NOTE

For details not shown see "Anchor Base Plate Details" and "Plan-Bottom Plates".

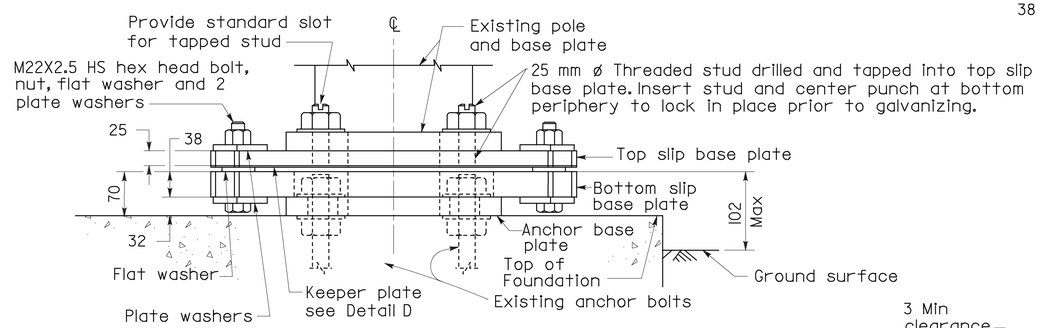

ELEVATION

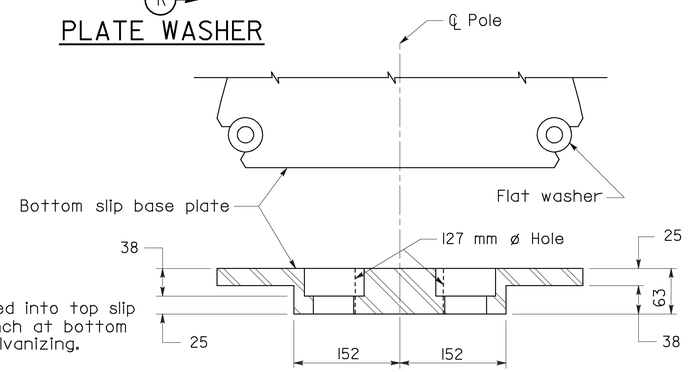

SECTION C-C

CAST OPTION

NOTES

1. Conduit riser (including bushing) shall protrude no more than 50 mm above top of foundation.
2. When existing anchor bolts are 22 mm ø, provide 2 hardened washers of 57 mm ø at each slot hole. Place on each side of anchor base plate.
3. Nuts on 22 mm ø HS clamping bolts shall be lubricated and torqued as per specifications.
4. Torque requirements for nuts attaching anchor base plate to existing anchor bolts are waived. Wrench tighten.

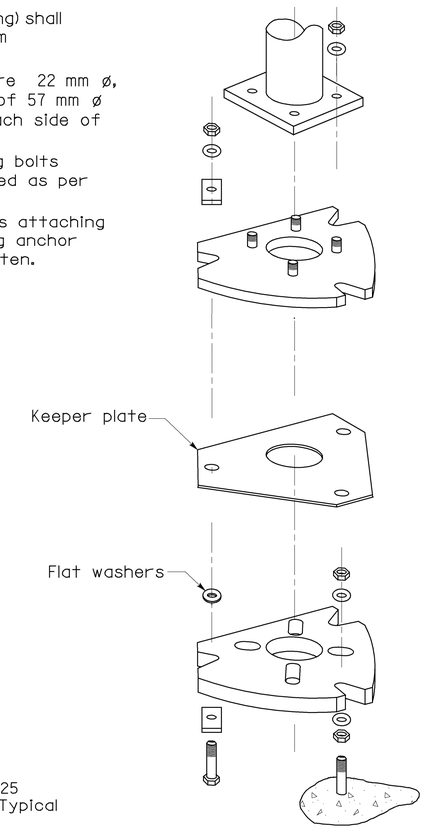

SLIP BASE INSERT DETAIL

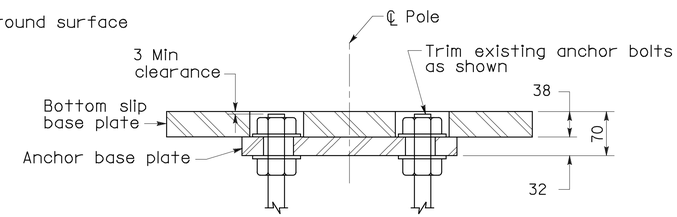

SECTION C-C

WELDED OPTION

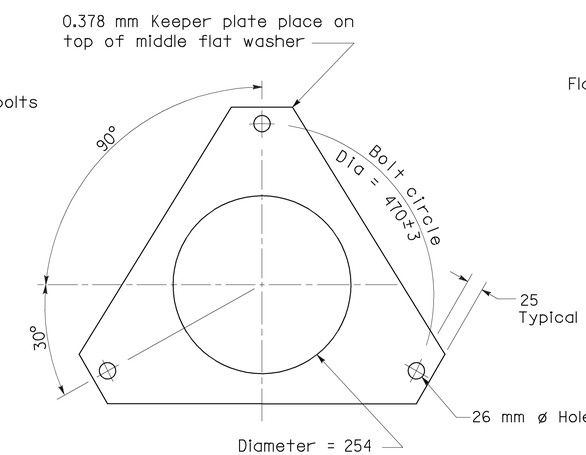

DETAIL D

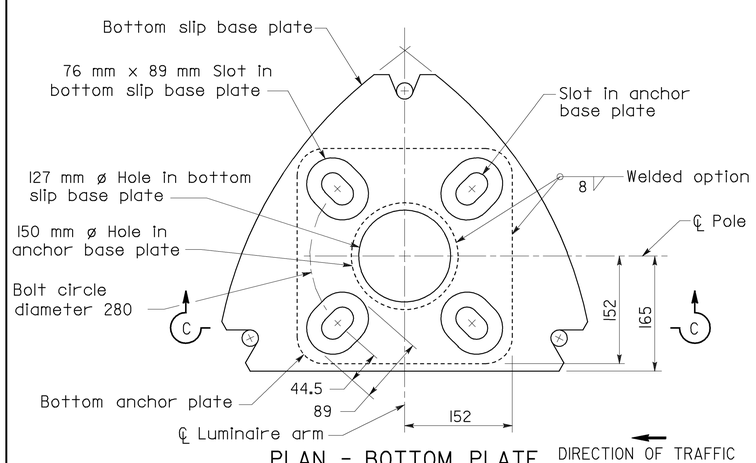

PLAN - BOTTOM PLATE

SLIP BASE PLATE INSERT DETAILS

NOTE

For plate dimensions see "Plan-Top Plates".

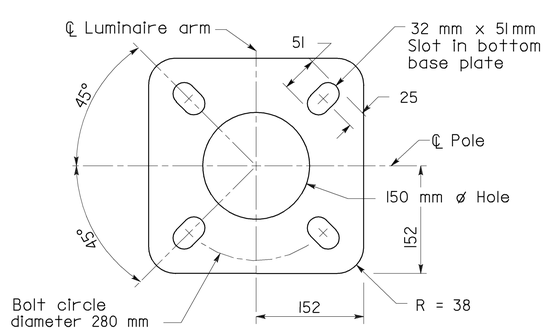

PLAN

ANCHOR BASE PLATE DETAILS

STATE OF CALIFORNIA
DEPARTMENT OF TRANSPORTATION

LIGHTING STANDARDS TYPE 15 SLIP BASE INSERT

NO SCALE

ALL DIMENSIONS ARE IN MILLIMETERS UNLESS OTHERWISE SHOWN

RSP ES-6C DATED OCTOBER 26, 2000 SUPERSEDES STANDARD PLAN ES-6C DATED JULY 1, 1999-PAGE 291 OF THE STANDARD PLANS BOOK DATED JULY 1999.

REVISED STANDARD PLAN RSP ES-6C

1999 REVISED STD. PLAN RSP ES-6C