DIST	COUNTY	ROUTE	KILOMETER POST TOTAL PROJECT	SHEET NO.	TOTAL SHEETS

Overcomer Y. Hor
REGISTERED CIVIL ENGINEER

October 26, 2000
PLANS APPROVAL DATE

REGISTERED PROFESSIONAL ENGINEER Overcomer Y. Hor No. C45803 Exp. 12-31-02 CIVIL STATE OF CALIFORNIA

The State of California or its officers or agents shall not be responsible for the accuracy or completeness of electronic copies of this plan sheet.

Caltrans Metric

To accompany plans dated _____

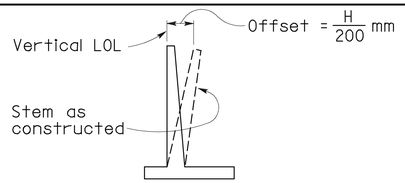

APPROXIMATE WALL OFFSET VALUES

Not required for wall Types 3 and 4. Values for offseting forms to be determined by the Engineer.

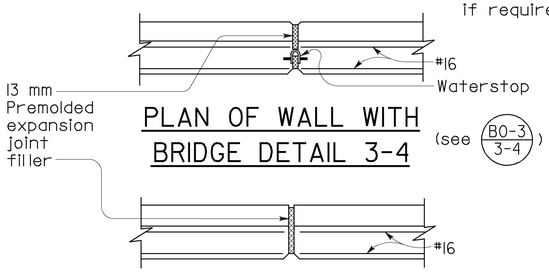

PLAN OF WALL WITH BRIDGE DETAIL 3-4

(see B0-3/3-4)

PLAN OF WALL WITH EXPANSION JOINT ONLY

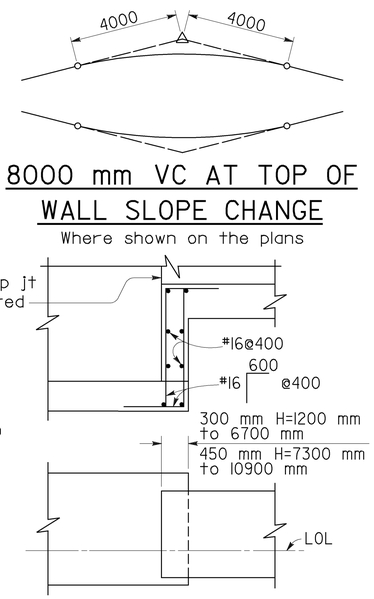

8000 mm VC AT TOP OF WALL SLOPE CHANGE

Where shown on the plans

FOOTING ONLY

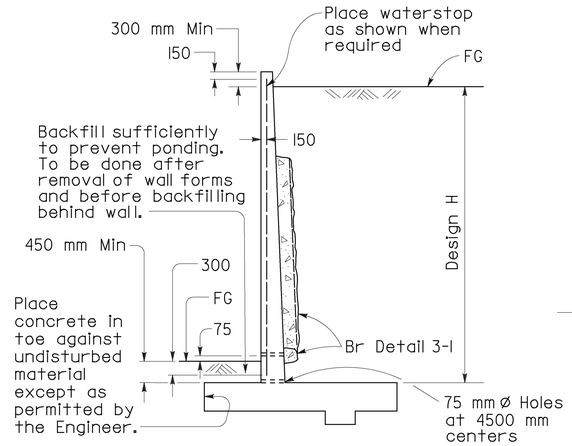

DESIGN AND DRAINAGE

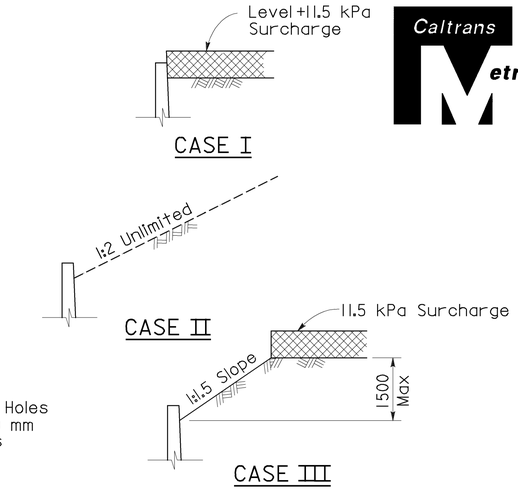

DETAIL OF DESIGN LOADING CASES

Case I Level +11.5 kPa surcharge

Case II 1:2 Unlimited slope

Case III 1:1.5 Limited slope (1500 max height) +11.5 kPa surcharge

NOTE: Surcharge Limits Shown Apply To Retaining Walls Type 1 and 3.

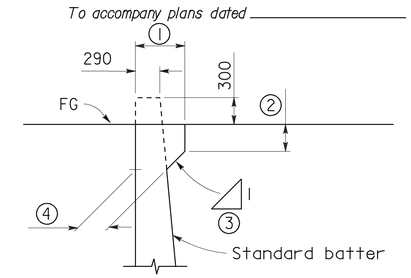

Dimensions 1, 2 and 3 to be as shown elsewhere in the Project Plans.

4 Stem width at base of haunch to be determined as shown.

STEM WIDTH AT BASE OF HAUNCH

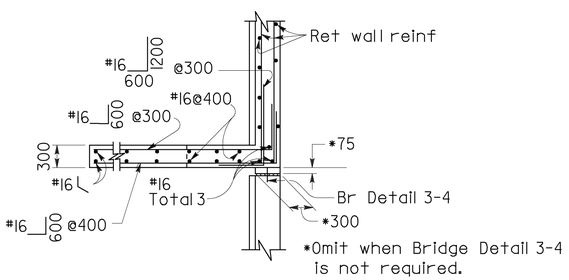

PLAN

(For return wall Type "A")

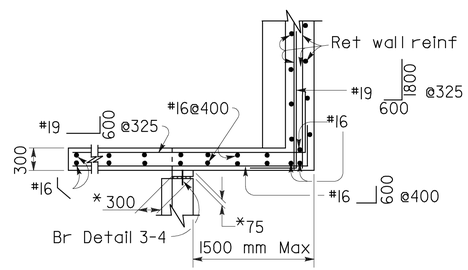

PLAN

(For return wall Type "B")

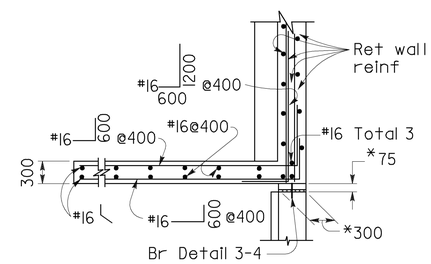

*Omit when Bridge Detail 3-4 is not required.

PLAN

(For return wall Type "C")

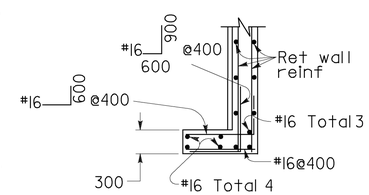

PLAN

(For return wall Type "D")

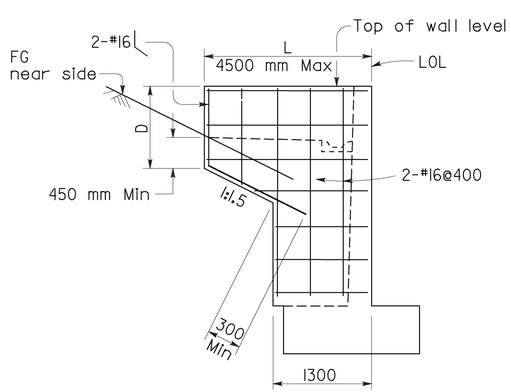

ELEVATION

RETURN WALL TYPE "A"

Use where H=2400 mm or less

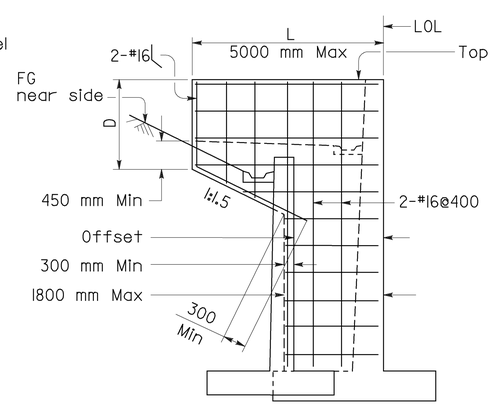

ELEVATION

RETURN WALL TYPE "B"

Use where H=3000 mm or more on offset walls

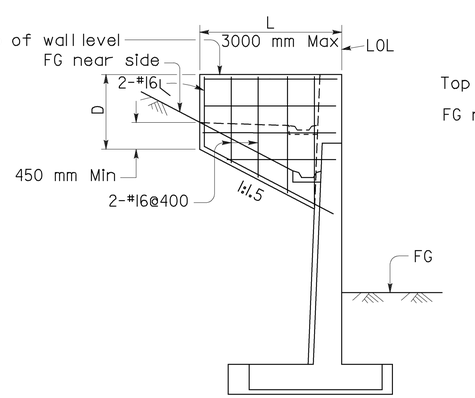

ELEVATION

RETURN WALL TYPE "C"

Use where H=3000 or more on straight walls

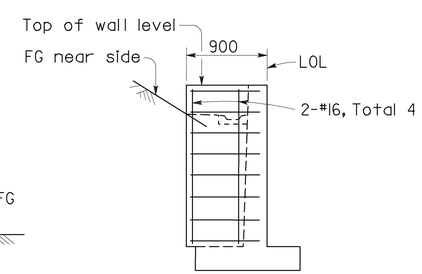

ELEVATION

RETURN WALL TYPE "D"

Use where H=1800 or less

NOTES

Design Conditions:

Design H may be exceeded by 150 millimeters before going to the next size. Special footing design is required where foundation material is incapable of supporting toe pressure listed in table.

Return wall not required unless shown elsewhere.

Design Data:

f_c = 10 MPa f'_c = 25 MPa f_s = 168 MPa

n = 10 earth = 19 kN/m^3

11.5 kPa surcharge:

Equivalent fluid pressure =

5.6 kPa/m maximum for determination of toe pressure.

4.2 kPa/m minimum for determination of heel pressure.

Earth pressures for 1:2 unlimited slope, 1:1.5 slope, and 1:1.5 unlimited slope, determined from Rankine's formula with Ø=33°-42'.

STATE OF CALIFORNIA
DEPARTMENT OF TRANSPORTATION

RETAINING WALL DETAILS NO. 1

NO SCALE

ALL DIMENSIONS ARE IN MILLIMETERS UNLESS OTHERWISE SHOWN

RSP B3-8 DATED AUGUST OCTOBER 26, 2000 SUPERSEDES STANDARD PLAN B3-8 DATED JULY 1, 1999-PAGE 189 OF THE STANDARD PLANS BOOK DATED JULY 1999.

REVISED STANDARD PLAN RSP B3-8