DIST	COUNTY	ROUTE	KILOMETER POST TOTAL PROJECT	SHEET NO.	TOTAL SHEETS

Caltrans Metric

Overcomer Y. Hor
REGISTERED CIVIL ENGINEER

October 26, 2000
PLANS APPROVAL DATE

REGISTERED PROFESSIONAL ENGINEER Overcomer Y. Hor No. C45803 Exp. 12-31-02 CIVIL STATE OF CALIFORNIA

The State of California or its officers or agents shall not be responsible for the accuracy or completeness of electronic copies of this plan sheet.

To accompany plans dated _____

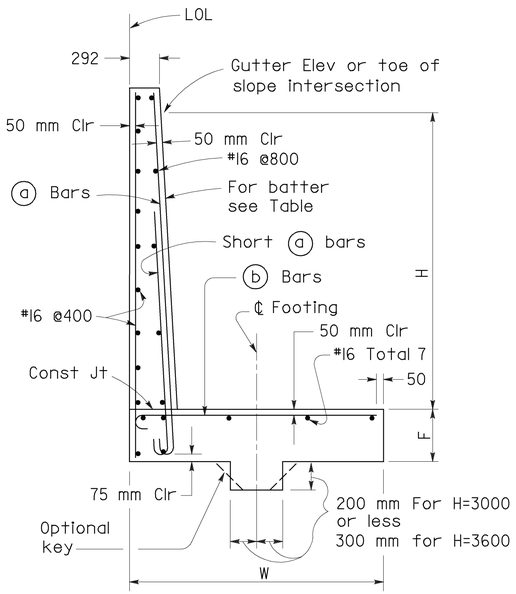

SPREAD FOOTING SECTION

NOTE

At ⓐ and Short ⓐ bars:

H ≤ 1800 mm, no splices are allowed within 500 mm above the top of footing.

H > 1800 mm, no splices are allowed within H/4 above the top of footing.

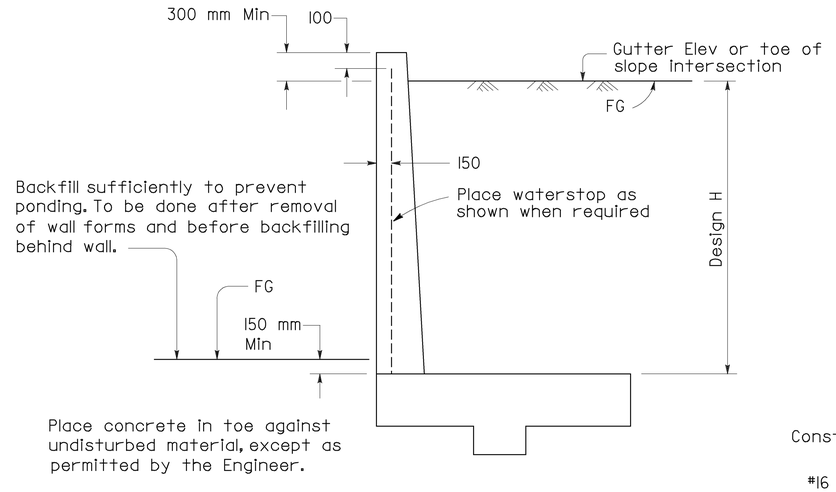

DESIGN

For drainage notes and other details, see B3-8

MAX PILE SPACING FOR 400 kN PILES

Design H	Front Row 1:3 Batter	Back Row Vertical
1200	5400	5400
1800	3600	5400
2400	2700	5400
3000	1800	3600
3600	1200	2400

For actual spacing, see Wall Layout.

Pile layout does not apply to Case IV conditions.

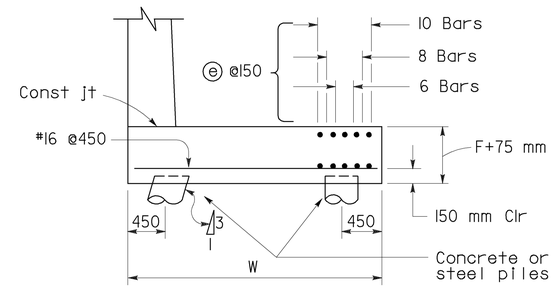

Reinforcement detailed is to be placed in addition to that shown for spread footings.

◉ For Design H=1200 use W=1550
All others from table

400 kN PILE FOOTING SECTION

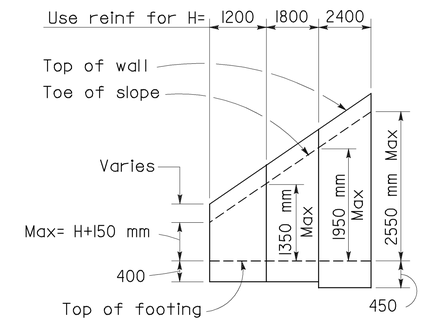

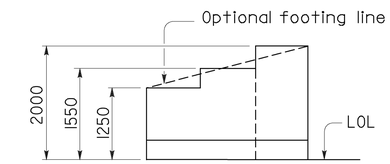

TYPICAL LAYOUT EXAMPLE

For joints required, see B0-3/3-3 & B0-3/3-4

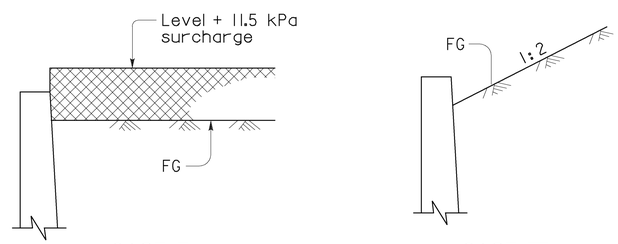

CASE I

CASE II

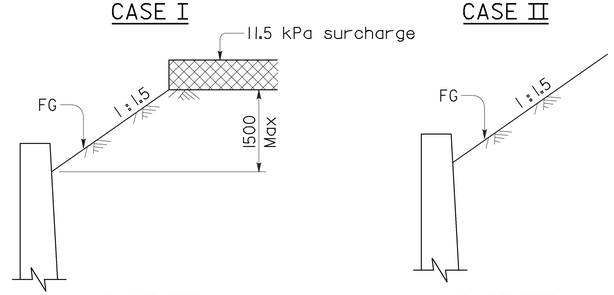

CASE III

CASE IV

DETAIL OF DESIGN LOADING CASES

Case I Level +11.5 kPa surcharge
Case II 1:2 Unlimited slope
Case III 1:1.5 Limited slope (1500 max height) +11.5 kPa surcharge
Case IV 1:1.5 Unlimited slope

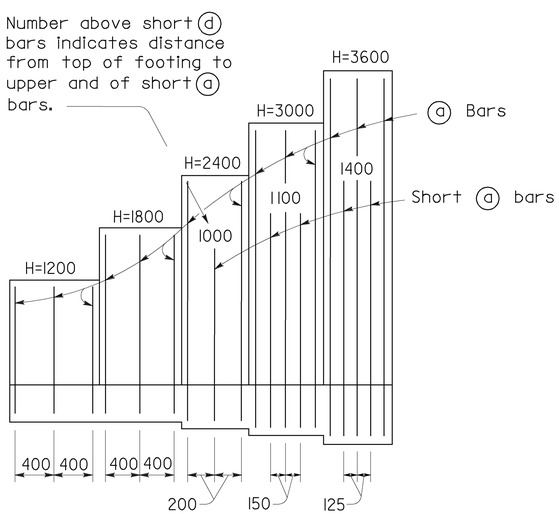

ELEVATION

NOTES

Design Conditions:

Design H may be exceeded by 150 mm before going to the next size.
Special footing design is required where foundation material is incapable of supporting toe pressure loads listed in table.

Design Data:

f_c = 10 MPa f'_c = 25 MPa f_s = 168 MPa n = 10 earth = 19 kN/m^3
Case I- Wall design for equivalent fluid pressure = 4.2 and 5.6 kPa/m.
Case II, III, IV - Wall design is based on Rankine's formula with ø = 33° 42′.

TABLE OF REINFORCING STEEL, DIMENSIONS AND DATA

Design H		◉ 1200	1800	2400	3000	3600
W		1250	1550	2000	2450	2900
F Spread Ftg		400	400	450	450	550
Batter		None	None	None	100:3	100:6
	ⓐ Bars	#16@400	#16@400	#16@400	#16@300	#16@250
Short	ⓐ Bars	None	None	#16@400	#16@300	#16@250
	ⓑ Bars	#16@400	#16@400	#16@200	#16@150	#16@125
Total	ⓔ Bars	8-#19	8-#19	10-#19	8-#19	6-#19
Toe Pressure	Case I kPa	80	105	120	145	170
	Case II kPa	75	100	130	165	195
	Case III kPa	80	110	140	185	210
	Case IV kPa	95	155	200	255	310

STATE OF CALIFORNIA
DEPARTMENT OF TRANSPORTATION

RETAINING WALL TYPE 5

NO SCALE

ALL DIMENSIONS ARE IN MILLIMETERS UNLESS OTHERWISE SHOWN

RSP B3-7 DATED OCTOBER 26, 2000 SUPERSEDES STANDARD PLAN B3-7 DATED JULY 1, 1999-PAGE 188 OF THE STANDARD PLANS BOOK DATED JULY 1999.

REVISED STANDARD PLAN RSP B3-7

1999 REVISED STD. PLAN RSP B3-7