To accompany plans dated _____

Caltrans Metric

| DIST | COUNTY | ROUTE | KILOMETER POST TOTAL PROJECT | SHEET NO. | TOTAL SHEETS |
|---|---|---|---|---|---|
| | | | | | |

REGISTERED CIVIL ENGINEER

October 26, 2000
PLANS APPROVAL DATE

Nahed Abdin No. C48719 Exp. 9-30-04 CIVIL — REGISTERED PROFESSIONAL ENGINEER — STATE OF CALIFORNIA

*The State of California or its officers or agents shall not be responsible for the accuracy or completeness of electronic copies of this plan sheet.*

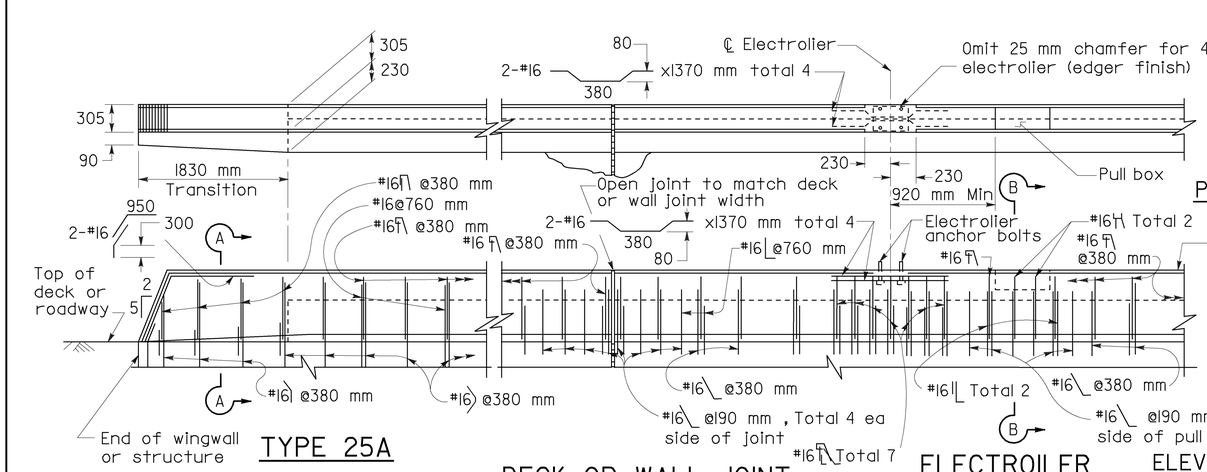


TYPE 25A

DECK OR WALL JOINT

ELECTROILER

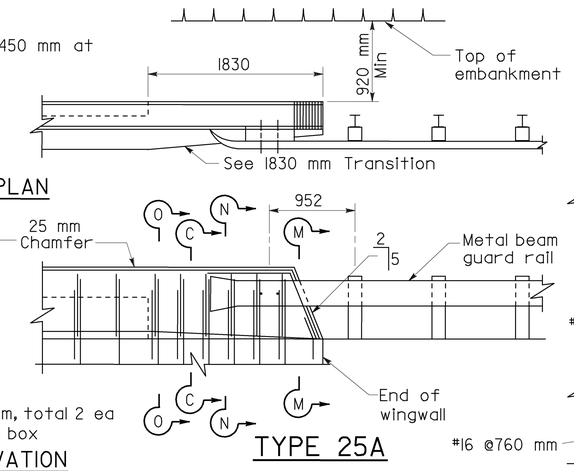


PLAN

ELEVATION

TYPE 25A

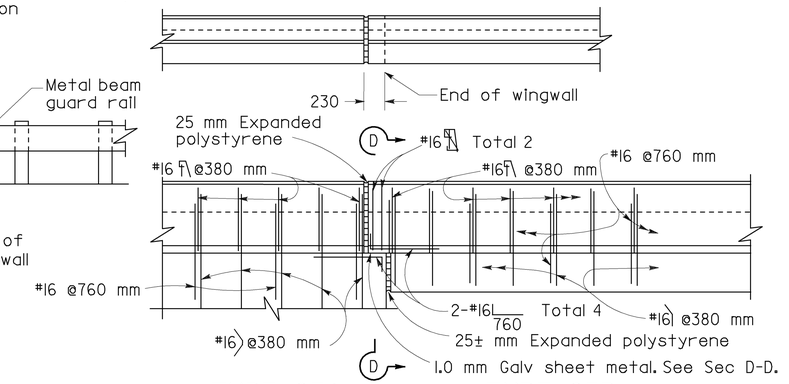


TYPE 25A

TYPE 25B

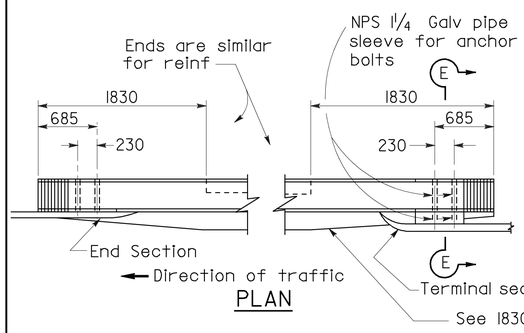


PLAN

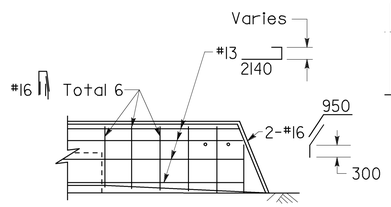


ELEVATION

METAL BEAM GUARD RAIL CONNECTION

See Note F

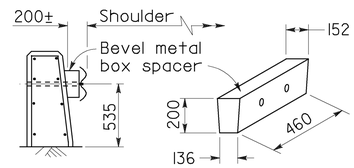


SECTION E-E

See Note F

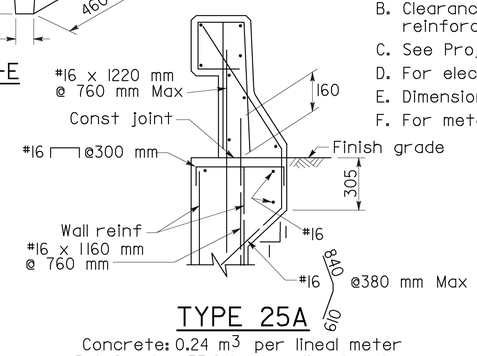


TYPE 25A

Concrete: 0.24 m³ per lineal meter
Reinforcing: 37.9 kg per lineal meter

## NOTES

A. Walls are to be backfilled before barrier is placed.
B. Clearance to reinforcing steel in barrier to be 25 mm, except as noted. Longitudinal reinforcement to stop at all expansion joints.
C. See Project Plans for electrolier locations and pull box type.
D. For electrical details see Standard Plans ES-9A, 9B, 9C, 9D and 9E.
E. Dimensions may vary with cross slope and with certain thickness of surfacing. See Project Plans.
F. For metal beam guard rail connection details not shown, see Standard Plan A77J.

Type 25A and 25B details are similar to Type 25 except as noted.

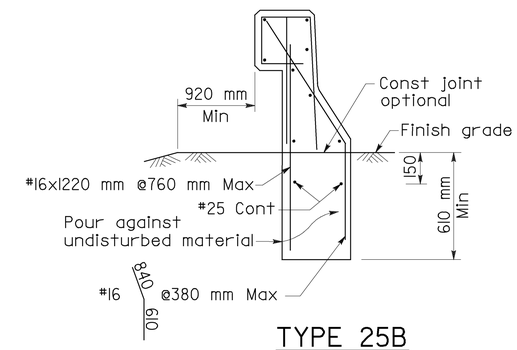


TYPE 25B

Concrete: 0.48 m³ per lineal meter
Reinforcing: 33.9 kg per lineal meter

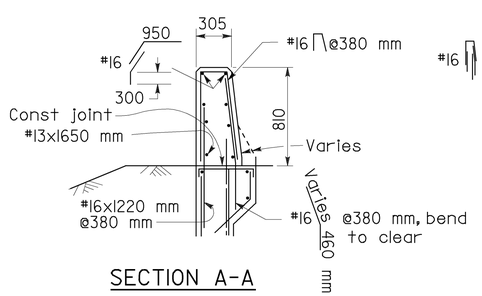


SECTION A-A

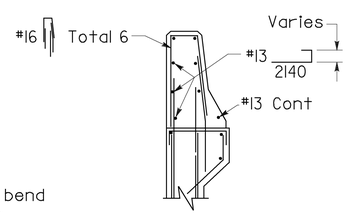


SECTION C-C

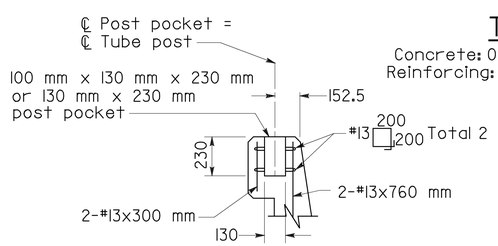


POST ANCHORAGE DETAIL

See Chain Link Railing or Tubular Hand Railing Standard Plans for futher details.

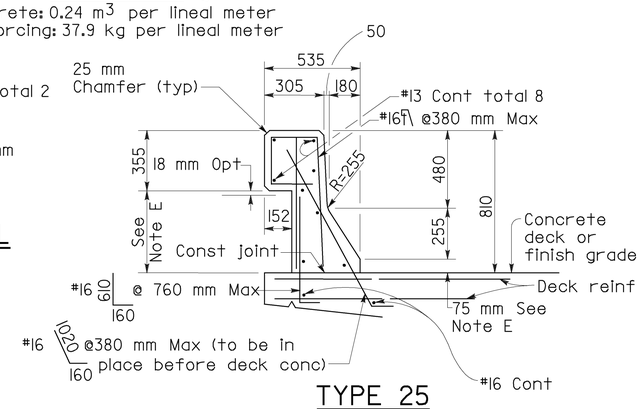


TYPE 25

Concrete: 0.24 m 3 per lineal meter
Reinforcing: 24.2 kg per lineal meter

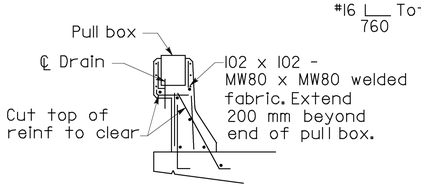


SECTION B-B

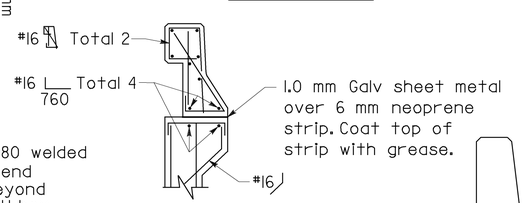


SECTION D-D

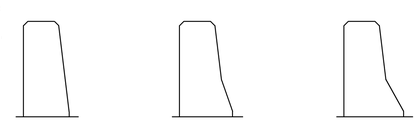

SECTION M-M SECTION N-N SECTION O-O

1830 mm TRANSITION

STATE OF CALIFORNIA
DEPARTMENT OF TRANSPORTATION

# CONCRETE BARRIER TYPE 25

NO SCALE

ALL DIMENSIONS ARE IN MILLIMETERS UNLESS OTHERWISE SHOWN

RSP B11-53 DATED OCTOBER 26, 2000 SUPERSEDES STANDARD PLAN B11-53 DATED JULY 1, 1999-PAGE 206 OF THE STANDARD PLANS BOOK DATED JULY 1999.

**REVISED STANDARD PLAN RSP B11-53**

**1999 REVISED STD. PLAN RSP B11-53**