DIST	COUNTY	ROUTE	KILOMETER POST TOTAL PROJECT	SHEET NO.	TOTAL SHEETS

Caltrans Metric

REGISTERED LANDSCAPE ARCHITECT

July 1, 1999
PLANS APPROVAL DATE

The State of California or its officers or agents shall not be responsible for the accuracy or completeness of electronic copies of this plan sheet.

LICENSED LANDSCAPE ARCHITECT — Gary T. Giacomini — Expiration 7-31-99 — Renewal Date 1999 — Date — STATE OF CALIFORNIA

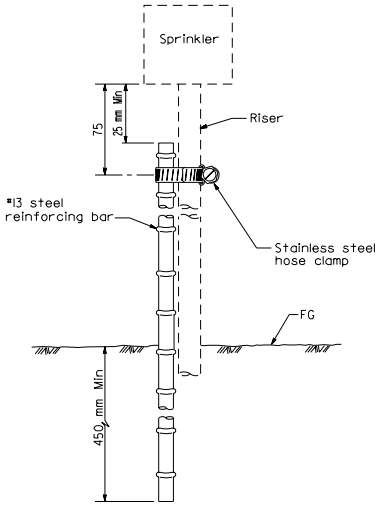

ELEVATION

RISER SUPPORT

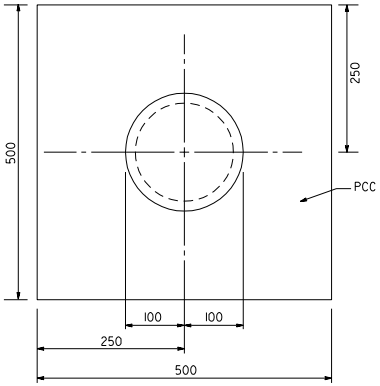

PLAN

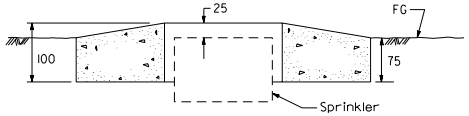

SECTION

SPRINKLER PROTECTOR TYPE II

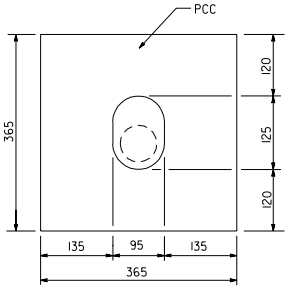

PLAN

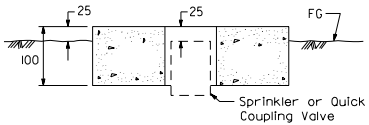

SECTION

SPRINKLER PROTECTOR TYPE I

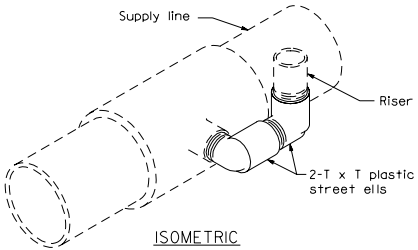

ISOMETRIC

SWING JOINT TYPE III

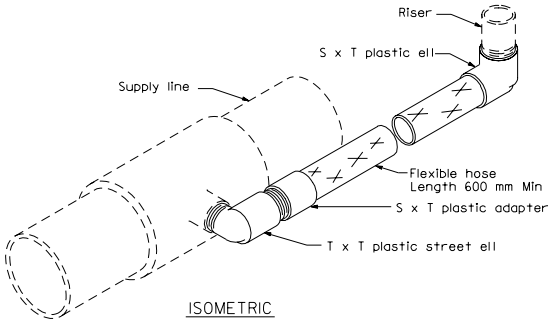

ISOMETRIC

SWING JOINT TYPE II

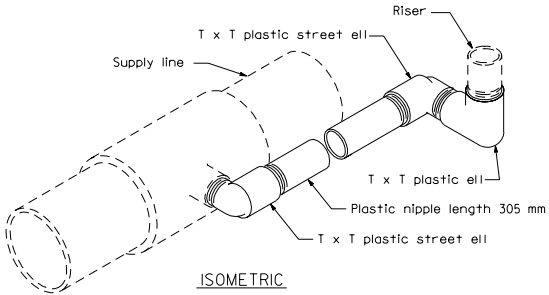

ISOMETRIC

SWING JOINT TYPE I

STATE OF CALIFORNIA
DEPARTMENT OF TRANSPORTATION

PLANTING AND IRRIGATION DETAILS

NO SCALE

ALL DIMENSIONS ARE IN MILLIMETERS UNLESS OTHERWISE SHOWN

H6

1999 STD. PLAN H6