DIST	COUNTY	ROUTE	KILOMETER POST TOTAL PROJECT	SHEET NO.	TOTAL SHEETS

Caltrans Metric

REGISTERED CIVIL ENGINEER

July 1, 1999
PLANS APPROVAL DATE

REGISTERED PROFESSIONAL ENGINEER Jeffrey B. Woody No. C41260 Exp. 3-31-03 CIVIL STATE OF CALIFORNIA

The State of California or its officers or agents shall not be responsible for the accuracy or completeness of electronic copies of this plan sheet.

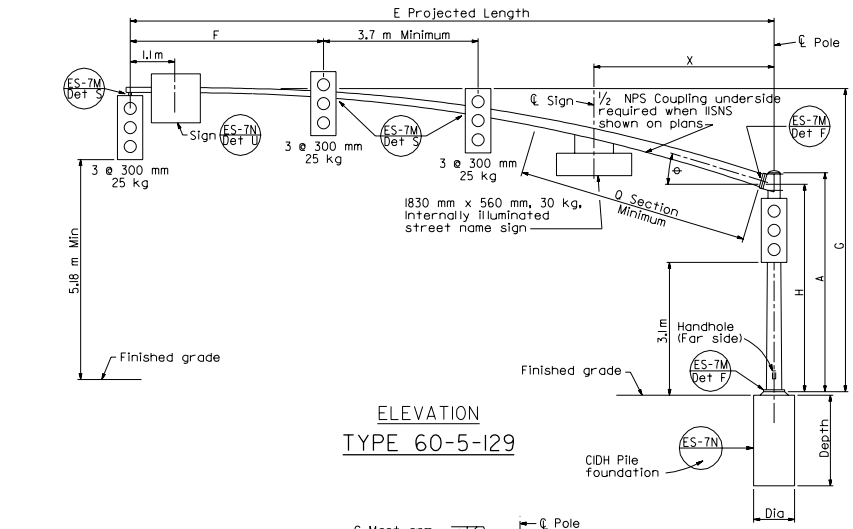

ELEVATION

TYPE 60-5-129

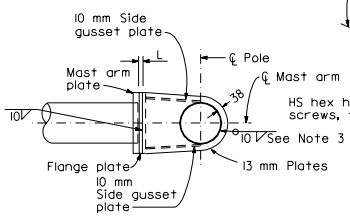

PLAN

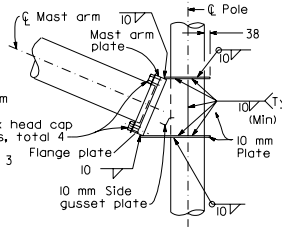

ELEVATION

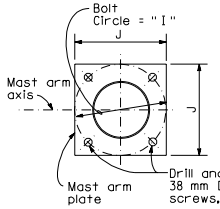

MAST ARM PLATE

SINGLE ARM CONNECTION DETAIL

NOTE

The radial separation between the face of the pole and the adjacent insides of the top and bottom gusset plates shall not exceed 5 mm. Fillet weld size to be increased by amount of gap.

SIGNAL ARM DATA														
E Projected Length	F Min Spacing	G Mounting Height	H	Min OD At Pole	Thickness	I Bolt Circle	HS Cap Screws	J Plate Size	K Arm ℄ Thickness	L Pole ℄ Thickness	θ	Q SECTION Length	Q SECTION Thickness	X Max
(m)				(mm)								(m)	(mm)	(m)
18.2	4.6	7.0 ±	4.9	343	4.6	508	38-6NC-102	508	51	51	15°	7.3	6.1	4.3
19.8				343	6.1							8.8	7.9	

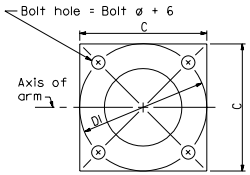

BASE PLATE

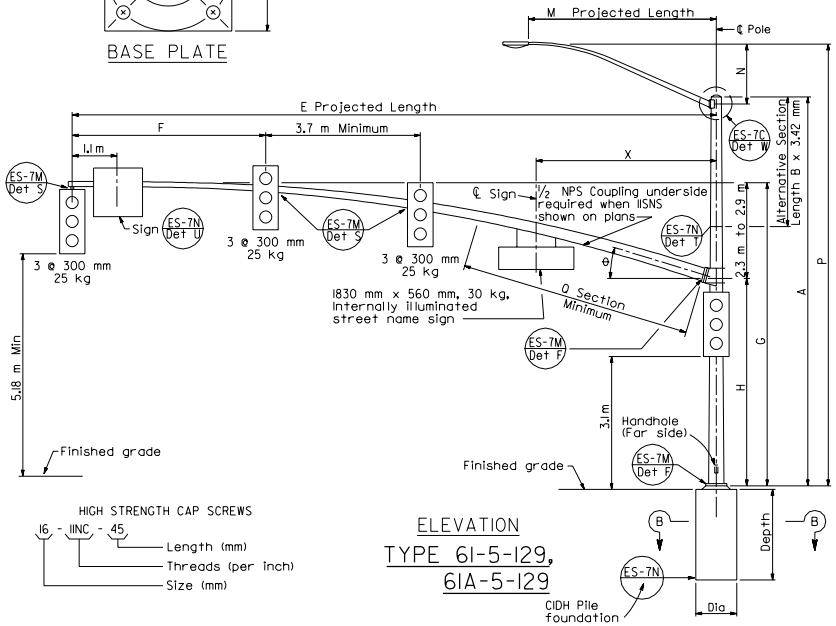

ELEVATION

TYPE 61-5-129, 61A-5-129

HIGH STRENGTH CAP SCREWS

16 - 11NC - 45
- Length (mm)
- Threads (per inch)
- Size (mm)

LUMINAIRE ARM DATA					
M Projected Length	N Rise	Min OD at Pole	Thickness	P Mounting Height 9.1 Pole	P Mounting Height 10.7 Pole
(m)	(mm)			(m)	
1.8	610 ±	83	3.04	9.6 ±	11.1 ±
2.4	760 ±	89		9.8 ±	11.3 ±
3.1	990 ±	98		10.0 ±	11.5 ±
3.7	1290 ±			10.3 ±	11.8 ±
4.6	1450 ±	108		10.5 ±	12.0 ±

Pole Type	Load Case	Wind Velocity km/h	POLE DATA A Height	POLE DATA Min OD Base	POLE DATA Min OD Top	POLE DATA Thickness	BASE PLATE DATA C	BASE PLATE DATA DI Bolt Circle	BASE PLATE DATA Thickness	BASE PLATE DATA Anchor Bolts Size	Luminaire Arm	Signal Arm	CIDH PILE FOUNDATION Diameter	CIDH PILE FOUNDATION Depth	CIDH PILE FOUNDATION Reinforced
			(m)	(mm)			(mm)				(m)		(mm)	(m)	
60-5-129	5	129	5.2	406	347	7.94	584	584	51	57 ø x 1524 x 152	1.8-[4.6]	18.2 or 19.8	914	4.9	Yes
61-5-129			9.1		301										
61A-5-129			10.7		282							19.8			

☐ Indicates arm length to be used unless otherwise noted on plans.

STATE OF CALIFORNIA
DEPARTMENT OF TRANSPORTATION

SIGNAL AND LIGHTING STANDARDS
CASE 5 ARM LOADING
WIND VELOCITY=129 km/h
ARM LENGTHS 18.2 m TO 19.8 m

NO SCALE

ALL DIMENSIONS ARE IN MILLIMETERS UNLESS OTHERWISE SHOWN

ES-7H

1999 STD. PLAN ES-7H