| DIST | COUNTY | ROUTE | KILOMETER POST TOTAL PROJECT | SHEET NO. | TOTAL SHEETS |
|---|---|---|---|---|---|
| | | | | | |

Caltrans Metric

REGISTERED CIVIL ENGINEER

July 1, 1999
PLANS APPROVAL DATE

REGISTERED PROFESSIONAL ENGINEER Jeffrey B. Woody No. C41260 Exp. 3-31-03 CIVIL STATE OF CALIFORNIA

The State of California or its officers or agents shall not be responsible for the accuracy or completeness of electronic copies of this plan sheet.

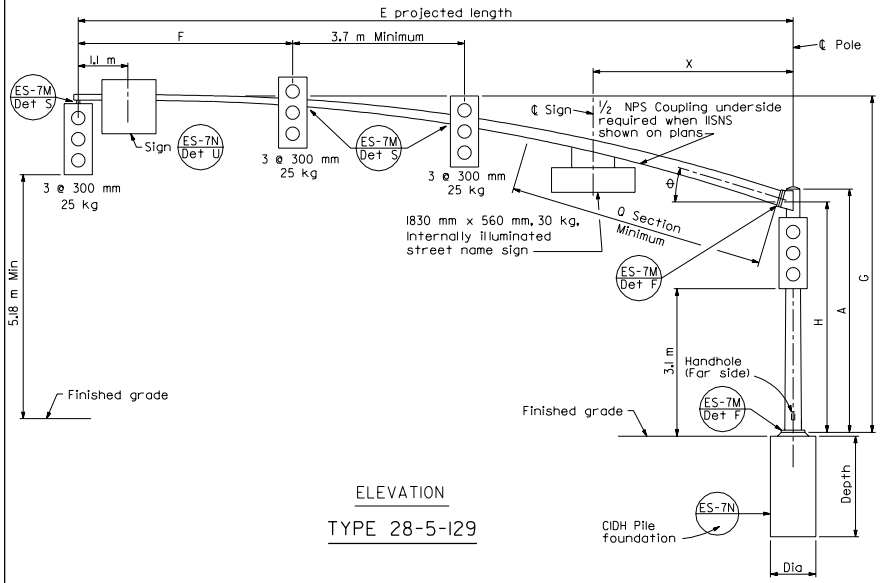


ELEVATION

TYPE 28-5-129

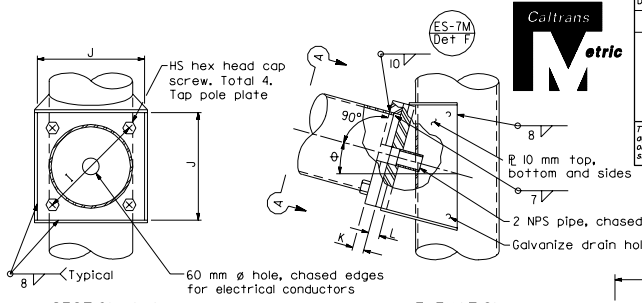


SECTION A-A

ELEVATION

SIGNAL ARM CONNECTION DETAILS

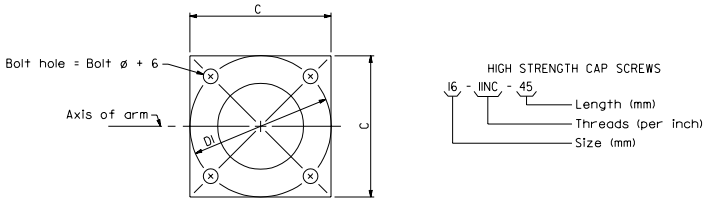


BASE PLATE

HIGH STRENGTH CAP SCREWS

16 - 11NC - 45
Length (mm)
Threads (per inch)
Size (mm)

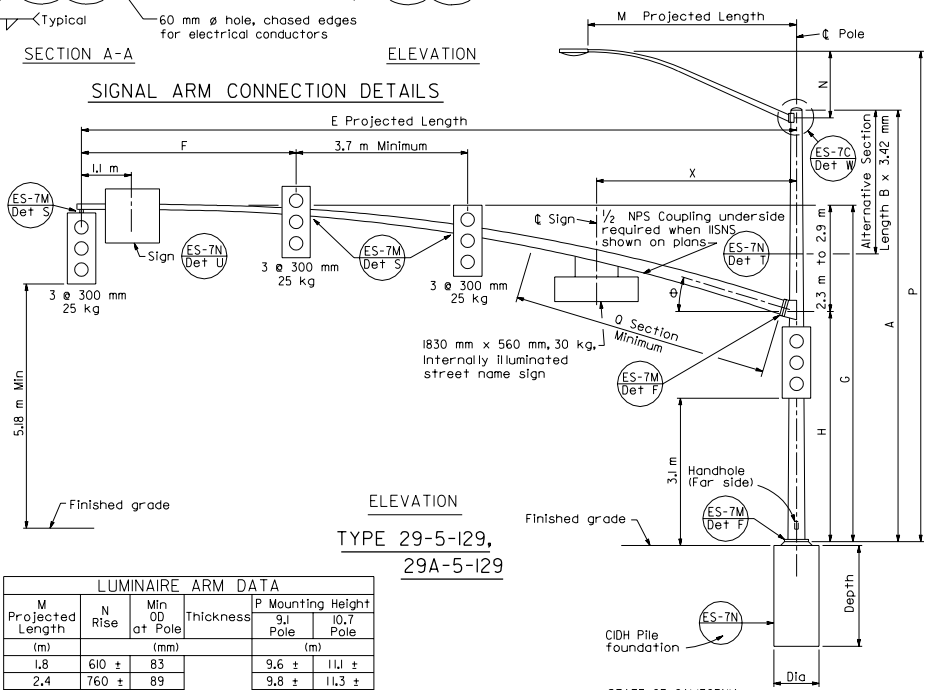


ELEVATION

TYPE 29-5-129, 29A-5-129

| SIGNAL ARM DATA | | | | | | | | | | | | | | |
|---|---|---|---|---|---|---|---|---|---|---|---|---|---|---|
| E Projected Length | F Min Spacing | G Mounting Height | H | Min OD At Pole | Thickness | I Bolt Circle | HS Cap Screws | J Plate Size | K Arm ℄ Thickness | L Pole ℄ Thickness | θ | Q SECTION Length | Q SECTION Thickness | X Max |
| (m) | | | | (mm) | | | | | | | | (m) | (mm) | (m) |
| 15.2 | 4.6 | 7.0 ± | 4.9 | 291 | 4.6 | 400 | 38-6NC-83 | 381 | 45 | 45 | 15° | 5.5 | 6.1 | 4.3 |
| 16.8 | | | | 305 | | | | | | | | 7.0 | | |

| LUMINAIRE ARM DATA | | | | | |
|---|---|---|---|---|---|
| M Projected Length | N Rise | Min OD at Pole | Thickness | P Mounting Height 9.1 Pole | P Mounting Height 10.7 Pole |
| (m) | (mm) | | | (m) | |
| 1.8 | 610 ± | 83 | 3.04 | 9.6 ± | 11.1 ± |
| 2.4 | 760 ± | 89 | | 9.8 ± | 11.3 ± |
| 3.1 | 990 ± | 98 | | 10.0 ± | 11.5 ± |
| 3.7 | 1290 ± | | | 10.3 ± | 11.8 ± |
| 4.6 | 1450 ± | 108 | | 10.5 ± | 12.0 ± |

| Pole Type | Load Case | Wind Velocity km/h | POLE DATA: A Height | Min OD Base | Min OD Top | Thickness | Alternative Section B Length | Alternative Section Bottom | Alternative Section Top | BASE PLATE DATA: C | DI Bolt Circle | D2 | Thickness | Anchor Bolts Size | Luminaire Arm | Signal Arm | CIDH PILE FOUNDATION: Diameter | Depth | Reinforced |
|---|---|---|---|---|---|---|---|---|---|---|---|---|---|---|---|---|---|---|---|
| | | | (m) | (mm) | | | (m) | (mm) | | (mm) | | | | | (m) | | (mm) | (m) | |
| 28-5-129 | 5 | 129 | 5.2 | 356 | 297 | 7.94 | None | 286 | | 533 | 533 | | 45 | 51ø x 1067 x 152 | None | 15.2 or 16.8 | 914 | 2.8 | Yes |
| 29-5-129 | | | 9.1 | | 251 | | 3.1 | | 251 | | | | | | 1.8 - 4.6 | | | | |
| 29A-5-129 | | | 10.7 | | 233 | | 4.6 | | 233 | 559 | 559 | | | | | 15.2 | | | |

☐ indicates arm length to be used unless otherwise noted on plans.

STATE OF CALIFORNIA
DEPARTMENT OF TRANSPORTATION

# SIGNAL AND LIGHTING STANDARDS
## CASE 5 ARM LOADING
## WIND VELOCITY=129 km/h
## ARM LENGTHS 15.2 m TO 16.8 m

NO SCALE

ALL DIMENSIONS ARE IN MILLIMETERS UNLESS OTHERWISE SHOWN

**ES-7G**

**1999 STD. PLAN ES-7G**