DIST	COUNTY	ROUTE	KILOMETER POST TOTAL PROJECT	SHEET NO.	TOTAL SHEETS

Caltrans Metric

REGISTERED CIVIL ENGINEER

July 1, 1999
PLANS APPROVAL DATE

REGISTERED PROFESSIONAL ENGINEER Jeffrey B. Woody No. C41260 Exp. 3-31-03 CIVIL STATE OF CALIFORNIA

The State of California or its officers or agents shall not be responsible for the accuracy or completeness of electronic copies of this plan sheet.

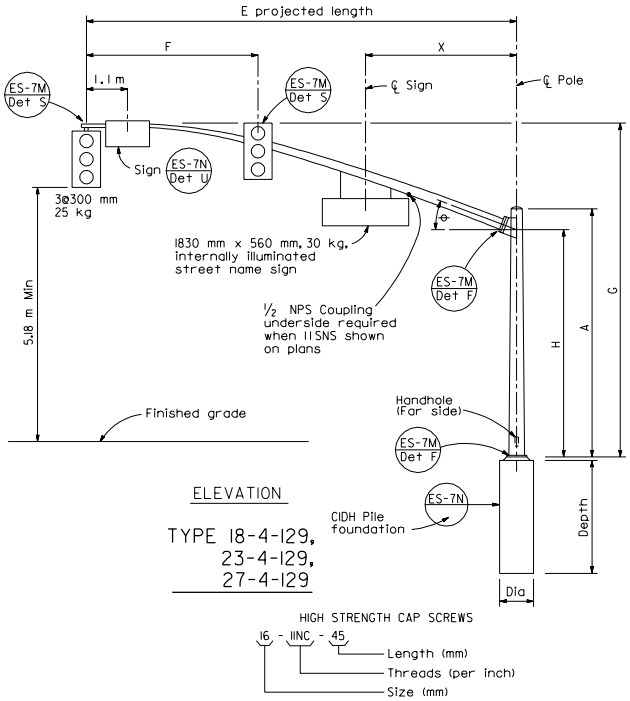

ELEVATION

TYPE 18-4-129, 23-4-129, 27-4-129

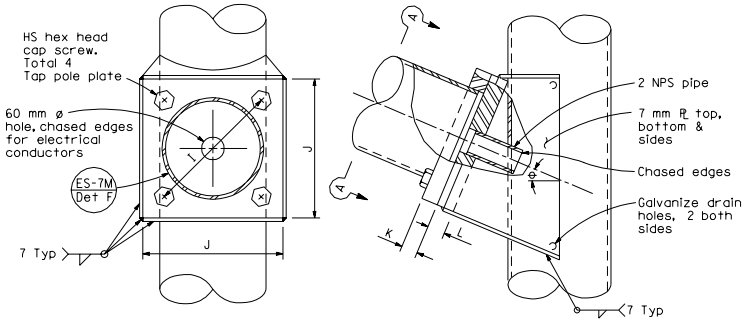

SECTION A-A

ELEVATION

SIGNAL ARM CONNECTION DETAILS

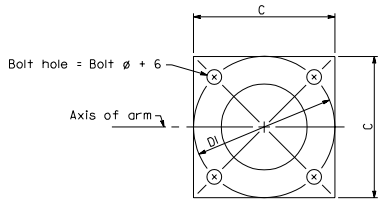

BASE PLATE

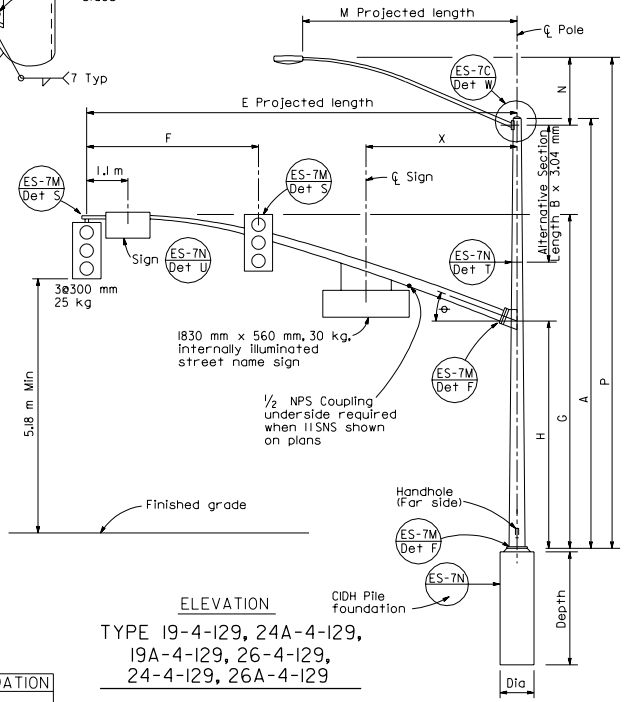

ELEVATION

TYPE 19-4-129, 24A-4-129, 19A-4-129, 26-4-129, 24-4-129, 26A-4-129

SIGNAL ARM DATA

E Projected Length	F Min Spacing	G Mounting Height	H	Min OD At Pole	Thickness	I Bolt Circle	HS Cap Screws	J Plate Size	K Arm PL Thickness	L Pole PL Thickness	θ	X Max
(m)				(mm)								(m)
7.6	3.1	6.9 ±	4.88	186	6.07	305	32-7NC-76	305	32	38	23°	3.2
9.1	3.7	7.0 ±		203								
10.7	4.3			222		330		330	38	45	21°	
12.2	4.6			238							15°	4.0
13.7		7.2 ±		256								

LUMINAIRE ARM DATA

M Projected Length	N Rise	Min OD at Pole	Thickness	P Mounting Height 9.1 Pole	P Mounting Height 10.7 Pole
(m)		(mm)		(m)	
1.8	610 ±	83	3.04	9.6 ±	11.1 ±
2.4	760 ±	89		9.8 ±	11.3 ±
3.1	990 ±	98		10.0 ±	11.5 ±
3.7	1290 ±			10.3 ±	11.8 ±
4.6	1450 ±	108		10.5 ±	12.0 ±

Pole Type	Load Case	Wind Velocity km/h	POLE DATA: A Height	Min OD Base	Min OD Top	Thickness	Alternative Section B Length	Alternative Section Bottom	Alternative Section Top	BASE PLATE DATA: C	DI Bolt Circle	Thickness	Anchor Bolts Size	Luminaire Arm	Signal Arm	CIDH PILE FOUNDATION: Diameter	Depth	Reinforced
			(m)	(mm)			(m)	(mm)		(mm)				(m)		(mm)	(m)	
18-4-129	4	129	5.2	305	229	6.07	None	238	203	457	445	38	51ø x 1067 x 152	None	7.6 or 9.1	760	2.7	Yes
19-4-129			9.1		203		3.1							1.8-4.6 [3.7]		914		
19A-4-129			10.7		186		4.6		186					1.8-4.6 [4.6]				
23-4-129			5.2		229		None							None	10.7			
24-4-129			9.1		203		3.1	238	203					1.8-4.6 [3.7]				
24A-4-129			10.7		186		4.6		186					1.8-4.6 [4.6]				
26-4-129			9.1	308	203	7.94	3.1		203					1.8-4.6 [3.7]	12.2 or 13.7			
26A-4-129			10.7		186		4.6		186					1.8-4.6 [4.6]				
27-4-129			5.2		248		None							None				

☐ Indicates arm length to be used unless otherwise noted on plans.

STATE OF CALIFORNIA
DEPARTMENT OF TRANSPORTATION

SIGNAL AND LIGHTING STANDARDS
CASE 4 ARM LOADING
WIND VELOCITY=129 km/h
ARM LENGTHS 7.6 m TO 13.7 m

NO SCALE

ALL DIMENSIONS ARE IN MILLIMETERS UNLESS OTHERWISE SHOWN

ES-7F

1999 STD. PLAN ES-7F