DIST	COUNTY	ROUTE	KILOMETER POST TOTAL PROJECT	SHEET NO.	TOTAL SHEETS

Caltrans Metric

REGISTERED CIVIL ENGINEER

July 1, 1999
PLANS APPROVAL DATE

REGISTERED PROFESSIONAL ENGINEER Jeffrey B. Woody No. C41260 Exp. 3-31-03 CIVIL STATE OF CALIFORNIA

The State of California or its officers or agents shall not be responsible for the accuracy or completeness of electronic copies of this plan sheet.

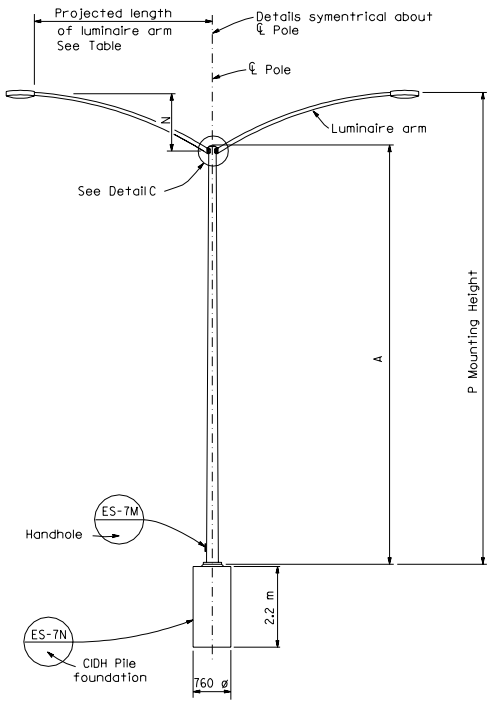

ELEVATION
TYPE 15D
TYPE 22D

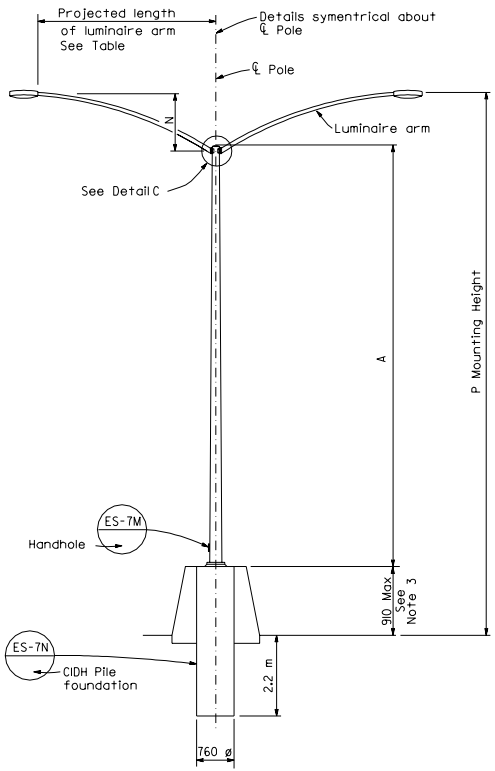

ELEVATION
TYPE 15D MEDIAN BARRIER MOUNTED
TYPE 21D MEDIAN BARRIER MOUNTED

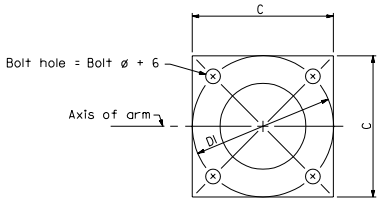

BASE PLATE

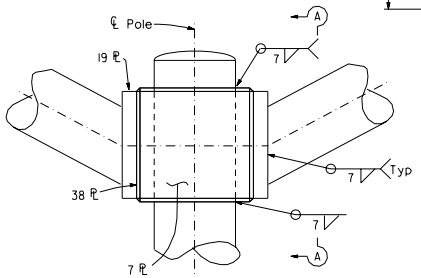

DETAIL C

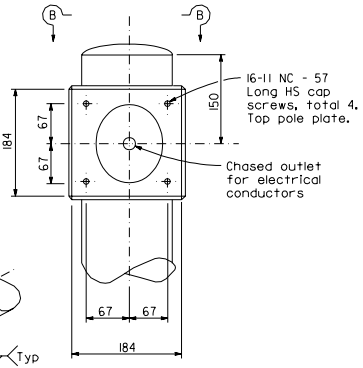

SECTION A-A

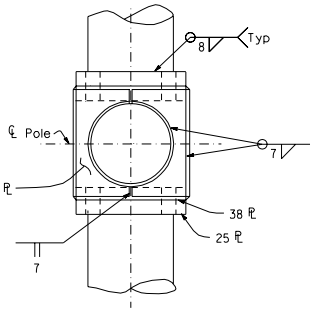

SECTION B-B

POLE TYPE	POLE DATA				BASE PLATE DATA				
	A Height	Min OD		Min Thickness	C	DI Bolt Circle	Thick-ness	Anchor Bolts	
		Base	Top					Size	Bolt Circle
	m	mm	mm	mm	mm	mm	mm	mm	mm
15D	9.1	203	98	4.55	305	305	25	32 ø x 1067 x 152	305
21D	10.7	219	98	4.55					
22D	10.7	219	98	4.55					

HIGH STRENGTH CAP SCREWS

16 - 11NC - 45
- Length (mm)
- Threads (per inch)
- Size (mm)

LUMINAIRE ARM DATA							
Projected Length	N Rise	Min OD At Pole	Nominal Thickness	P Mounting Height			
				Type 15D	Type 22D	Type 15D (910 mm Barrier)	Type 21D (910 mm Barrier)
m	mm	mm	mm	m	m	m	m
1.8	610 ±	83	3.04	9.6 ±	11.1 ±	10.5 ±	12.0 ±
2.4	760 ±	89	3.04	9.8 ±	11.3 ±	10.7 ±	12.2 ±
3.1	990 ±	98	3.04	10.0 ±	11.5 ±	10.9 ±	12.4 ±
$\boxed{3.7}$	1290 ±	98	3.04	10.3 ±	11.8 ±	11.2 ±	12.7 ±

NOTES

1. ☐ indicates arm length to be used unless otherwise noted on the plans.
2. For additional notes see Standard Plan ES-7M.
3. See Concrete Barrier Details Type 50E, 60E and 60SE.

STATE OF CALIFORNIA
DEPARTMENT OF TRANSPORTATION

LIGHTING STANDARDS TYPES 15D, 21D AND 22D DOUBLE LUMINAIRE ARM

NO SCALE

ALL DIMENSIONS ARE IN MILLIMETERS UNLESS OTHERWISE SHOWN

ES-6D

1999 STD. PLAN ES-6D