DIST	COUNTY	ROUTE	KILOMETER POST TOTAL PROJECT	SHEET NO.	TOTAL SHEETS

Caltrans Metric

REGISTERED ELECTRICAL ENGINEER

July 1, 1999
PLANS APPROVAL DATE

REGISTERED PROFESSIONAL ENGINEER Sompol Chatusripitak No. E13633 Exp. 6-30-03 ELECTRICAL STATE OF CALIFORNIA

The State of California or its officers or agents shall not be responsible for the accuracy or completeness of electronic copies of this plan sheet.

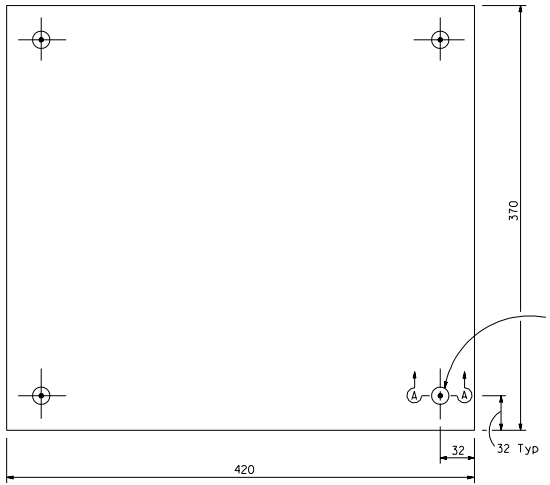

BACKBOARD A
(Material: 18 mm A-C Plywood)

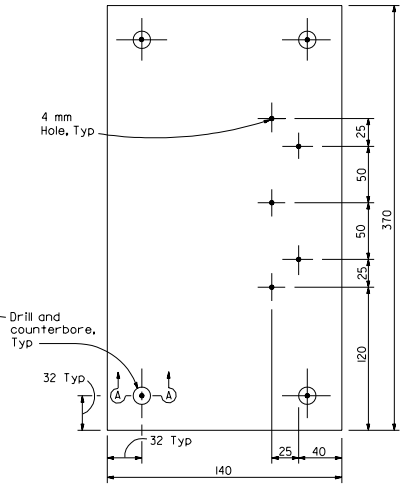

BACKBOARD B
(Material: 18 mm A-C Plywood)

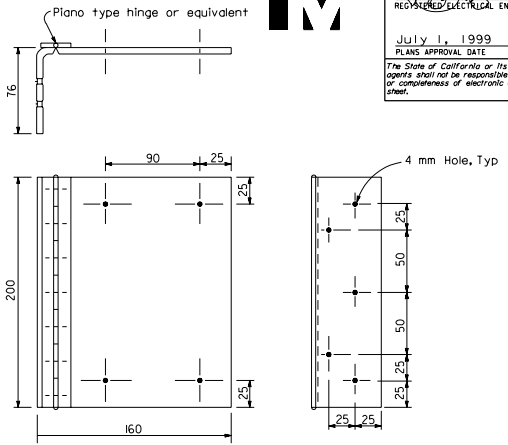

HINGED METAL BRACKET

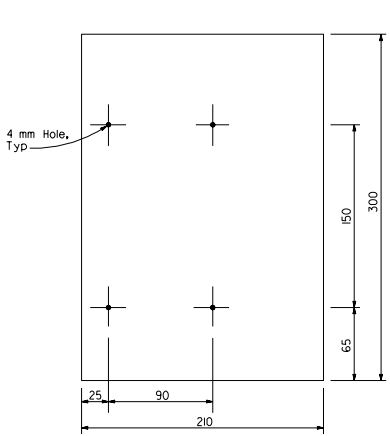

BACKBOARD C
(Material: 18 mm A-C Plywood)

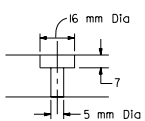

SECTION A-A

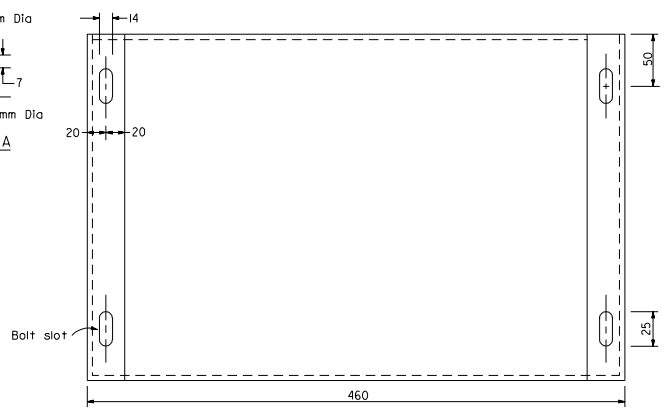

CABINET BASE
(Material: 3.42 mm Galvanized Steel)

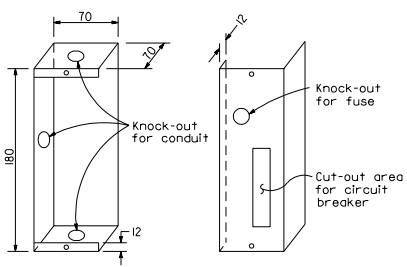

METAL BOX DETAIL
(Material: 1.71 mm Galvanized Steel)

STATE OF CALIFORNIA
DEPARTMENT OF TRANSPORTATION

SIGNAL LIGHTING AND ELECTRICAL SYSTEMS TELEPHONE DEMARCATION CABINET TYPE C DETAILS

NO SCALE

ALL DIMENSIONS ARE IN MILLIMETERS UNLESS OTHERWISE SHOWN

ES-3G

1999 STD. PLAN ES-3G