Post Type	Pole Data				Base Plate Data (mm)				CIDH Pile Data		
	Height "H" (m)	Min OD		Min Thickness (mm)	Dia	Thickness	Anchor Bolts		"D" (mm)	"L" (m)	Pile Reinf.
		BASE (mm)	TOP (mm)				SIZE	BC=BOLT CIRCLE			
CCTV 90	27.4	610	281	4.55*	914	51	51	737	1067 ø	3.6	15 - #22
CCTV 80	24.3	559	256	4.55*	864	51	51	686	1067 ø	3.3	15 - #22
CCTV 70	21.3	508	260	4.55	813	51	51	635	1067 ø	3.0	15 - #22
CCTV 60	18.2	457	248	4.55	762	51	51	584	1067 ø	2.7	15 - #22

* Lower pole segment thickness, see Pole Details

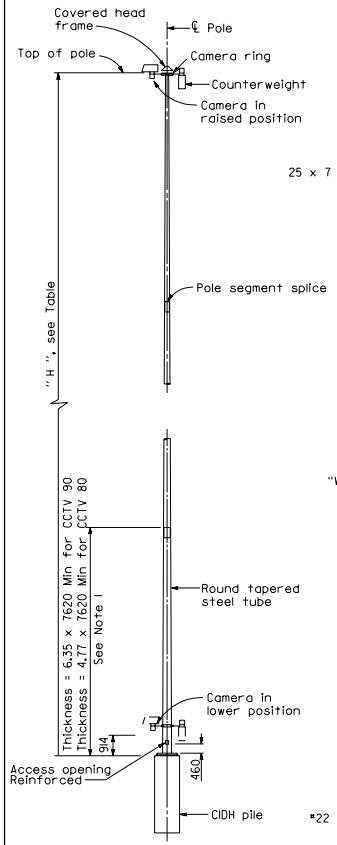

POLE DETAILS

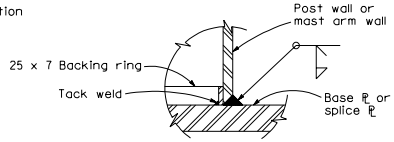

WELD DETAIL

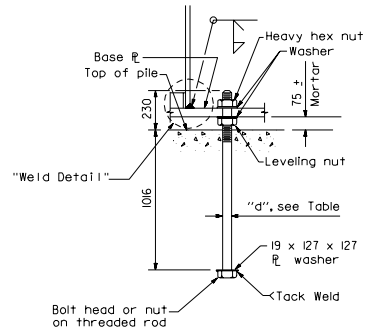

ANCHOR BOLT DETAIL

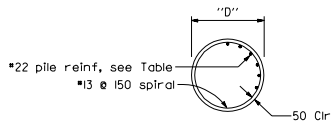

SECTION A-A

CIDH PILE DETAILS

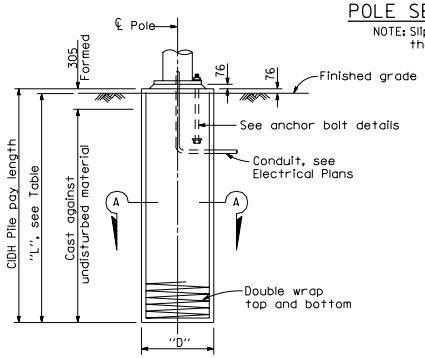

TYPICAL ELEVATION

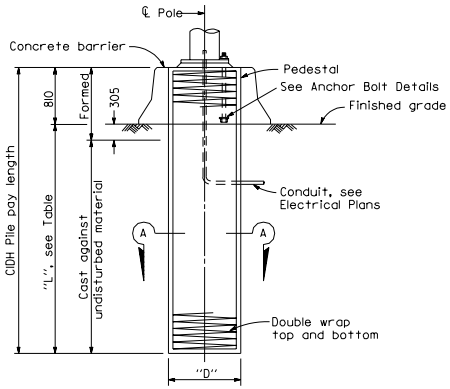

MEDIAN LOCATION

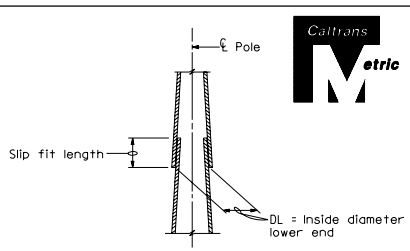

POLE SEGMENT SPLICE DETAIL

NOTE: Slip fit length shall not be less than 1.5 DL minus two inches.

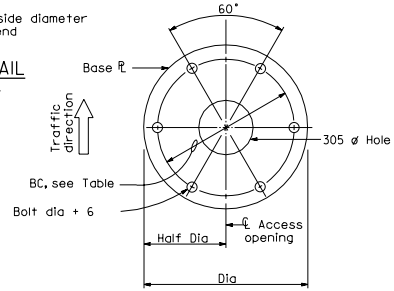

BASE PLATE DETAILS

GENERAL NOTES:

SPECIFICATIONS

Design : AASHTO specifications for the design and construction of structural supports for highway signs, dated 1994.

LOADING

Wind Loadings : 129 km/h AASHTO

UNIT STRESSES

Structural Steel : f_s Maximum allowed for design of tapered steel tube (pole) to be 379 MPa.

NOTES

1. Pole details shall suit the lowering device and this foundation plan. Pole details shall be submitted to the Engineer for approval.
2. Pole finishes shall be galvanized.
3. For camera details, see Electrical Plans.
4. Foundation design is based on a maximum wind velocity of 129 km/h.

DIST	COUNTY	ROUTE	KILOMETER POST TOTAL PROJECT	SHEET NO.	TOTAL SHEETS

Caltrans Metric

REGISTERED CIVIL ENGINEER

July 1, 1999

PLANS APPROVAL DATE

REGISTERED PROFESSIONAL ENGINEER Jeffrey B. Woody No. C41260 Exp. 3-31-03 CIVIL STATE OF CALIFORNIA

The State of California or its officers or agents shall not be responsible for the accuracy or completeness of electronic copies of this plan sheet.

STATE OF CALIFORNIA
DEPARTMENT OF TRANSPORTATION

CLOSED CIRCUIT TELEVISION 18.2 m TO 27.4 m HIGH MAST POLE FOUNDATION DETAILS

NO SCALE

ALL DIMENSIONS ARE IN MILLIMETERS UNLESS OTHERWISE SHOWN

ES-16C

1999 STD. PLAN ES-16C