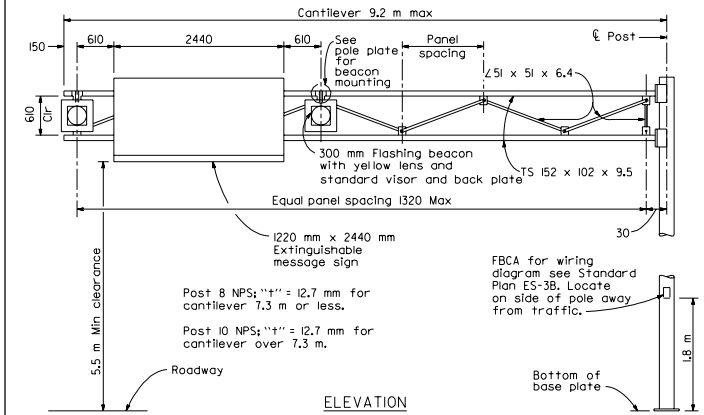

ELEVATION

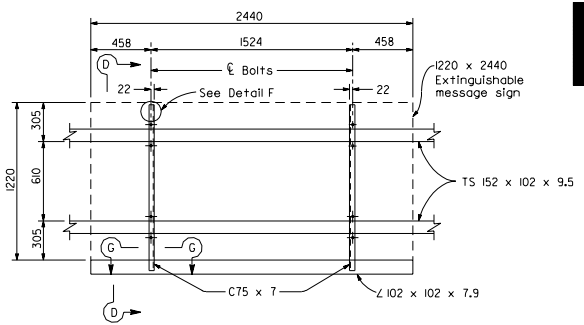

SIGN MOUNTING DETAILS

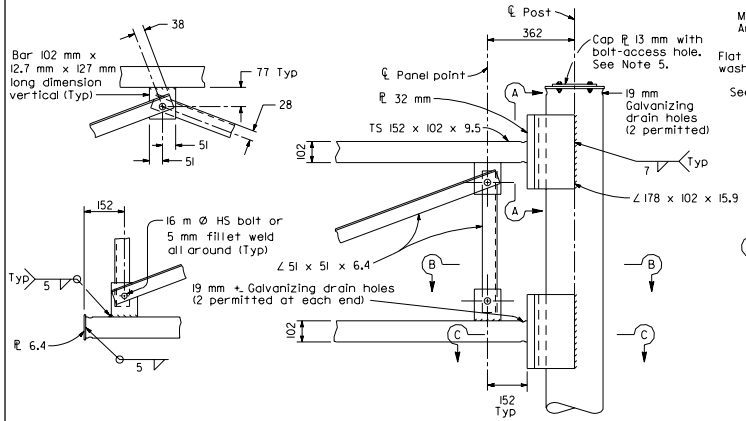

TRUSS FRAME CONNECTION DETAILS

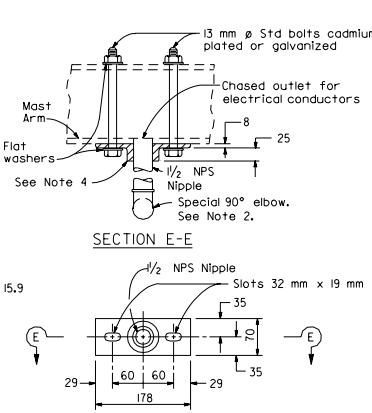

SECTION E-E

ELEVATION

POLE PLATE FOR BEACON MOUNTING

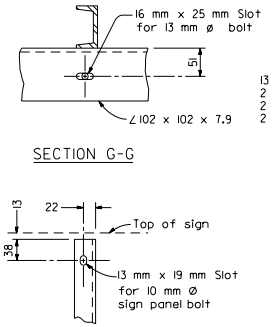

SECTION G-G

DETAIL F

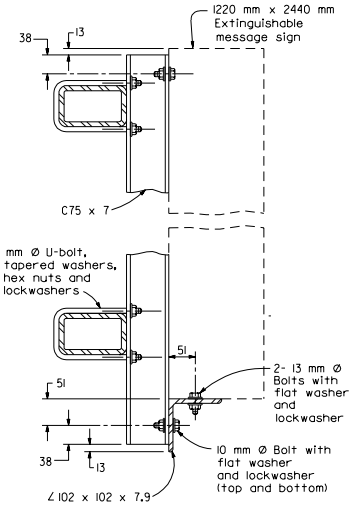

SECTION D-D

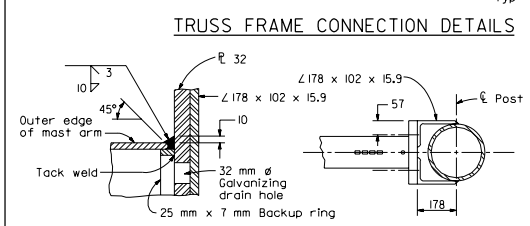

SECTION C-C

SECTION B-B

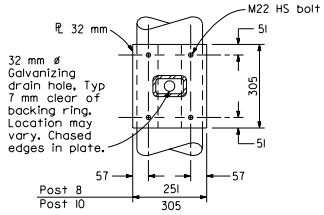

SECTION A-A

NOTES

1. For general notes, base plates, anchor bolts and foundations refer to Lightweight Signs, Post Details and Foundation Details sheets of the Standard Plans.
2. For details of special 90° elbow, see Standard Plans ES-4D.
3. For sign structure dimensions, see Project Plans.
4. Pole plate shall be bronze, aluminum or ductile iron as specified in the Standard Specifications.
5. For Bolt-Access Hole Details, see Overhead Signs-Truss Frame Juncture Details.

Caltrans Metric

DIST	COUNTY	ROUTE	KILOMETER POST TOTAL PROJECT	SHEET NO.	TOTAL SHEETS

REGISTERED CIVIL ENGINEER

July 1, 1999
PLANS APPROVAL DATE

REGISTERED PROFESSIONAL ENGINEER Sampol Chatuar Ipitak No. E13633 Exp. 6-30-03 ELECTRICAL STATE OF CALIFORNIA

The State of California or its officers or agents shall not be responsible for the accuracy or completeness of electronic copies of this plan sheet.

STATE OF CALIFORNIA
DEPARTMENT OF TRANSPORTATION

SIGNAL, LIGHTING AND ELECTRICAL SYSTEMS EXTINGUISHABLE MESSAGE SIGN AND FLASHING BEACONS

NO SCALE

ALL DIMENSIONS ARE IN MILLIMETERS UNLESS OTHERWISE SHOWN

ES-14C

1999 STD. PLAN ES-14C